AGENDA ITEM

CITY OF LODI
COUNCIL COMMUNICATION

TM

AGENDA TITLE: **Accept West Yost & Associates Study for Full Implementation of Woodbridge Irrigation District Surface Water Supply**

MEETING DATE: **November 1, 2005 (Special Meeting)**

PREPARED BY: **Public Works Director**

RECOMMENDED ACTION: That the City Council accept the West Yost & Associates (WYA) study for full implementation of the Woodbridge Irrigation District (WID) surface water supply.

BACKGROUND INFORMATION: At the April 19, 2005, Shirtsleeve Meeting, staff presented alternatives for implementing the 6,000 acre-feet per year (AFY) surface water supply acquired from WID.

The alternatives included groundwater recharge and/or constructing a surface water treatment plant to address the existing groundwater overdraft conditions and meeting future demands associated with Lodi's projected growth and recommended further study of these options. On April 20, 2005, Council approved a task order with WYA for further study and recommendation for full implementation of the WID surface water supply.

The attached study provides an analysis of the alternatives, comparison criteria and preliminary cost estimates. Based on the qualitative comparison criteria, a southerly-positioned groundwater recharge basin is the recommended alternative. The surface water treatment plant alternative does provide the most tangible benefit, but at significantly higher costs (page 21). The study also includes discussion on an interim plan to utilize raw water for irrigating schools and parks near the WID South Main Canal.

Present worth analysis, including capital, operational and maintenance costs, are presented in the report. Eventually, a decision must be made as to the proportionate funding responsibility between existing users and future development.

Considering the significant impact that any of the alternatives will have on the future of Lodi's water supply, staff recommends that Council accept the attached report and schedule a subsequent Shirtsleeve Meeting(s) and eventually a public hearing to provide a forum for more detailed discussion and to address questions, at which a decision on direction should be made.

FISCAL IMPACT: None at this time.

FUNDING AVAILABLE: Not applicable.

Richard C. Prima, Jr.
Public Works Director

Attachment
cc: City Attorney
City Engineer
Assistant Water/Wastewater Superintendent

APPROVED: _____
Blair King, City Manager

TECHNICAL MEMORANDUM NO. 1

DATE: May 23, 2005 Project No.: 809-08-05-01

TO: Charles Swimley
City of Lodi

FROM: Dave Peterson
Chris Ewers
West Yost & Associates

SUBJECT: City of Lodi—Full Surface Water implementation Study

Introduction

The City of Lodi contracted with the Woodbridge Irrigation District (WID) to provide 6,000 AF/year of untreated surface water (raw water) for 40 years in May, 2003. The City is currently examining its options for developing this water supply.

This technical memorandum addresses construction and operation of two alternatives for developing the water supply:

- A groundwater recharge basin at various proposed locations around the city's perimeter
- A water treatment plant serving the City of Lodi's potable water system

The intent of this study is to provide the City with the tools to take the next logical step in implementing the WID surface water supply with an eye toward long-term benefit, rather than short-term consequence. This document provides an analysis of each alternative, comparison criteria, and a recommended alternative. It also addresses an interim plan to irrigate schools and parks near the WID South Main Canal with raw water. If implemented quickly, this interim plan would allow the City to use a portion of the WID supply beginning at approximately December 2006.

All summary analyses of costs are provided in present worth (PW). This report evaluates total costs for the facilities studied and does not attempt to distribute implementation costs between new development and existing rate payers.

Surface Water Implementation Alternatives

WID's contract with the City of Lodi allows the City to bank up to three years of delivery, or 18,000 AF. Absent a system for developing the WID surface water, the bank

will fill in October, 2006. The design of surface water implementation alternatives includes evaluations of how each alternative can accommodate this water in addition to the 6,000-AF annual WID delivery.

In preparation for this study, city staff designated sites that may be potential candidates for groundwater recharge facilities, as shown in Figure 1. A westerly basin site is feasible, but it is not evaluated as part of this study because the northerly and southerly candidate sites reflect the least and most expensive recharge basin alternatives. The Surface Water Treatment Plant (SWTP) is shown on Figure 2.

The City also estimated a groundwater unit cost of approximately $80/AF that can be deducted from alternatives that replace water already being drawn from the City's potable water system. This value is based on the cost to provide energy and manpower to the City's groundwater wells to produce 1 AF of water. It does not include maintenance or other ongoing costs associated with the wells or distribution system, given that the city must continue to maintain these elements regardless of water source.

Groundwater Recharge Alternatives

Groundwater extraction rates have exceeded sustainable aquifer yield in the City of Lodi sphere of influence for decades. The September 2004 "Surface Water Supply Options" study commissioned by the City indicates an average annual lowering of the water table by 0.35 feet per year since 1927. Given the local dependence on good-quality groundwater and the availability of surface water through the WID surface water agreement, groundwater recharge holds promise for the city.

The benefit of groundwater recharge isn't always apparent to the public. Probably the most difficult aspect of groundwater recharge for a public agency is the difficulty of demonstrating a direct local benefit. Local sentiment can run against an option that underwrites the region's water needs at local expense.

Two means of groundwater recharge are available to the city: aquifer storage and recovery (ASR) wells and single-purpose recharge basins.

ASR Wells — ASR wells allow users to inject water into an aquifer, then retrieve it again when it is needed. Central Valley Regional Quality Control Board (RWQCB) regulations currently prohibit degradation of groundwater, a difficult test for a water to pass. Injecting even water treated to drinking water standards troubles RWQCB officials for its potential to contaminate an aquifer with disinfection byproducts, oxidation of the aquifer structure, and chemical reactions in the aquifer with water that changes the aquifer's oxygen content. Raw water injection presents a higher risk in its potential for aquifer contamination. The RWQCB is considering conditions under which treated water injection would be allowed. However, it is not contemplating allowing injection of raw water at this time. Because the WID water would have to be treated prior to injection, ASR would be an additive cost on the water treatment plant alternative, so it was not considered further in this study.

Recharge Basins — Groundwater recharge through single-purpose recharge basins is less problematic for regulators. Areas are set aside and graded flat to accommodate water in large, shallow pools that percolate into the aquifer. The percolation rate for a site and the annual duration of operation determine the area needed for the basin floor at any time. These facilities obviously require more land than ASR wells. Other types of recharge areas that would provide dual uses, such as parks and open spaces, are not considered in this report because of their expense.

The operational skills needed to run a recharge basin are minimal (particularly in contrast to an SWTP), but some operations and maintenance techniques can make the facility more successful:

- An aquitard (low-permeability zone) shallower than 15 feet below the basin floor should be excavated and removed.
- Alternating wet and dry cycles, minimizing cycle time (1-5 days). Agencies can optimize basin recharge by maximizing wet times within the cycle, and by minimizing water depth or pumping the basin dry.
- Sectioning basins to allow for rotation, just as farmers rotate fallow fields.
- Basin floors should be level with ridges or furrows to allow increased surface area, trap fine sediments in troughs, and discourage algae growth.
- Basins should dry between long-term wetting cycles. An annual drying time of 30-60 days is recommended.
- Basin floors should be periodically scraped to remove fine sediment and to break up compaction. Unless the water supply has a lot of sediment, this can be done every 2-5 years.
- Weed growth should be minimized in the basin floor. Herbicides, such as Rodeo, have been successfully used, but this would require approval from the Regional Water Quality Board or the Department of Health Services. Basin banks and bottom can be cleared through manual and mechanical means during the annual drying period as well.

Basin Area Required

The "Surface Water Supply Options" study includes an estimate of 1 foot/day (ft/day) percolation rate.[1] This study uses a more conservative 0.5 feet/day to percolate 6,000

[1] City of Lodi staff provided percolation readings of 0.02-0.11 ft/day for a period in March-April, 2005 in stormwater basins C and G. These values were lower than the actual percolation rate because rainfall and contributions from the drainage basins were not included in the calculations. Determining these contributing factors is beyond the scope of this study. The Stockton East Water District (SEWD) has seen a percolation rate of 0.5-0.6 ft/day near its water treatment plant, and 0.1-0.35 ft/day in a percolation basin system west of the treatment plant. SEWD staff attribute the difference to preparation of the site near the

AF/year with an operating time between March 1 and October 15. This study assumes a shallow, 0.5-foot pond depth and that the operating time will be split into cyclic periods of 2 days of dry time for every four days of basin inundation. It is also assumed the basin will be dried for 45 days beginning Oct. 16, at the end of the annual diversion schedule. Given these factors and estimated rainfall and evaporation rates, the required basin floor size is approximately 74 acres. If the acreage of basin was used to percolate for the remainder of the year at the same rate and if the water were available, it would take more than eight years of operation between deliveries of the WID contract water to percolate the 18,000 AF bank of stored water.

This study's estimates of basin requirements are determined by assuming a rectangular plan broken into four sections. Under this approach, the basin banks would be sloped at a 1V:5H gradient to permit mowing, with a 30-foot-wide perimeter of aggregate base six inches thick (Fig. 4). The water surface would be approximately 74 acres when inundated, and the pond area at ground surface would be 82 acres. Assuming a 30-foot fence set back on all sides, the site would occupy approximately 88 acres.

The cost of the facility if built in 2006 is tabulated in Table 1.

Table 1: Recharge Basin Construction Costs

Description	Quantity	Unit	Unit Price	Capital Cost
Excavated material for export	759,600	CY	$ - *	$ - *
Permanent security fencing	8,060	LF	$ 28	$ 226,000
Perimeter aggregate base	248,000	SF	$ 1.20	$ 298,000
Canal turnout	1	LS	$ 25,100	$ 26,000
Insert flow meter, float/level valve and vault	1	LS	$ 27,000	$ 27,000
Inlet piping	40	LF	$ 360	$ 15,000
Outlet riprap	4	CY	$ 140	$ 1,000
Sutotal				**$ 593,000**
Construction Contingency (20%)	1	LS	$ 119,000	$ 119,000
Engineering and Other Fees (15%)	1	LS	$ 89,000	$ 89,000
Subtotal				**$ 801,000**
Purchase land for basin	88	AC	$ 200,000	$17,574,000
CEQA/NEPA[$]	1	LS	$ 100,000	$ 100,000
Total				**$18,475,000**

*Excavation costs are offset by the value of the excavated material to the contractor.
[$] Assumes only a Negative Declaration required for basin environmental permitting.

Operation and maintenance costs for the basin are estimated at approximately $35,000 per year in 2005 dollars (1/2 of employee at $50,000/year full-time annual salary with a

water treatment plant before it was put into use and note percolation rates seem to improve with proximity to the Mokelumne River. These factors cannot indicate the percolation rate to be used for the City of Lodi's percolation basins because they are dependent on local variability in the soil. Nevertheless, they reinforce the use of a 0.5-ft/day rate.

1.4 multiplier for benefits). A basin scraping operation should be completed approximately once every five years, at a cost of approximately $15,000.

Assuming WID provides the water previously banked for eight consecutive years, the recharge basin would accept approximately 8,250 AF of raw water each of those years. The water balance in the basin shown in Table 2 shows that precipitation and evaporation effects lower the estimated groundwater recharge to approximately 7,900 AF per year during the eight years of water bank depletion. After the water bank is exhausted, the evaporation rate changes because the basin is only in service during the 7.5 months of WID delivery.

Table 2: 79-Acre Recharge Basin Water Balance

Source	Banked Water Year Operation Volume (AF)	Typical-Year Operation Volume (AF)	Notes
Intake	8,250	6,000	Water Bank Year Operation: 6,000 AF + 18,000 AF/8 years
Rainfall	113	113	Ave. annual rainfall = 17.1 in./yr.
Evaporation	-462	-397	Ave. annual evaporation = 80.0 in./yr.
Percolation	7,901	5,836	

This indicates a percolation efficiency of approximately 95 percent for the duration of the agreement. Note that percolation efficiency is a measure of water entering the groundwater table, not water available to Lodi.

Potential Recharge Basin Site Considerations

The potential recharge basin site alternatives differ in location and acreage provided for each (Figure 1). These differences have the following implications.

Northerly recharge basin sites:

Percolation Rate – The Natural Resource Conservation Service (NRCS) soil maps indicate the area suggested by City of Lodi staff for a local recharge basin site is underlain by an alluvium composed of sandy loam capable of good drainage with an effective rooting depth of 60 inches or more. These indicate percolation rates used in this study might be conservatively low for the northerly alternatives.

Available Acreage – The northern sites total 75 acres, less than the required 88 acres. However, the higher the percolation rate, the smaller the area required for percolation basins. Once the percolation rate is known for the available site, city staff can make a more exact determination about the acreage required for the recharge basins. A 1 ft/day rate would shrink the required percolation basin facility area (including perimeter fencing, slopes, etc.) to approximately 51 acres.

Effect on Aquifer – The potential sites indicated by City of Lodi staff for local recharge are situated just south of the Mokelumne River and are within 2,500 feet of the river. (Figure 1). From a qualitative perspective, even the presence of a steepening aquifer gradient away from the river may not prevent a substantial portion of the water percolated in the Northerly recharge basin from returning to the river. The basin would effectively widen the river, and correspondingly raise the groundwater gradient. Wells 7, 26, and 15 would most likely get some benefit from the northwestern site, and well 4R would most likely see a groundwater surface increase from the northeastern site. If either alternative is pursued, the City of Lodi must obtain site-specific data on percolation rates and groundwater movement to clarify these issues.

Water Source Proximity – The WID's South Main Canal runs far from most of the acreage suggested for the Northerly percolation basins. Even if the 13-acre parcel on the west side of Lodi is used, the remaining acreage required for a percolation basin would have to be developed on the eastern side. This suggests three options: pumping and piping the WID water to the Northerly percolation basin across Lodi (a pipeline distance of roughly 4.25 miles), drawing the water from a shallow well on the Mokelumne River's bank to fill the percolation basin, or creating a river intake for the percolation basin. All of the options are evaluated here using a basin fill time of 24 hours (meaning the flow out of the percolation basin would be equivalent to the flow in), or a flow of approximately 8,900 gpm.

Water source options, Northerly Basin Sites:

Pumping and piping from the WID South Main Canal (near Mills and Corbin) – A 30-inch (in.) pipeline alone (the size required to keep velocities below 5 feet per second) would cost approximately $6.62 million without considering the costs for navigating obstructions, such as Highway 99 and all the utilities along the way.

Shallow well on the Mokelumne River – No matter where this intake was located, it would effectively transfer shallow groundwater into the basin to become shallow groundwater again.

Mokelumne River intake – The intake, with an intake basin, pump station, and short outlet pipe (approx. 40 ft.), would operate 24 hours/day during the "wet" cycles of the basin. If the intake was constructed in 2006 with a net discount rate of 2 percent, the present worth of the facility would be approximately $3,453,000. Operations and maintenance (O&M) costs are estimated to include power to drive the pumps, half of one FT employee (salary $60,000, 1.4 benefits factor), and half the annual power costs in maintenance.

During years when the City could operate the percolation basin and intake to draw down banked water, the power charges are approximately those in Table 3.

Table 3: River Intake Operation O&M Cost During Water Bank Depletion Year

	Summer	*Winter*	*Subtotal*
Power cost	$ 6,678	$ 4,123	$ 10,801
Demand cost	$ 427	$ 153	$ 581
Meter cost	$ 547	$ 478	$ 1,025
			$ 12,407
Personnel 0.5 x FT ($60k salary x 1.4)			$ 42,000
Maintenance[$]			$ 6,300
Total O&M/yr. for 8,250 AF			**$ 60,800**

[$] For the purpose of this study, maintenance cost is estimated to be half of power cost.

In a typical year of operation, the intake would pump 6,000 AF of water to the percolation basin, resulting in the slightly lower O&M costs found in Table 4.

Table 4: River Intake Operation O&M Cost During Typical Year

	Summer	*Winter*	*Subtotal*
Power cost	$ 5,259	$ 3,247	$ 8,506
Demand cost	$ 427	$ 153	$ 581
Meter cost	$ 431	$ 377	$ 807
			$ 9,894
Personnel 0.5 x FT ($60k salary x 1.4)			$ 42,000
Maintenance[$]			$ 5,000
Total O&M/yr. for 6,000 AF			**$ 56,900**

[$] For the purpose of this study, maintenance cost is estimated to be half of power cost.

Table 5 contains the capital and O&M present-worth costs for each year of the WID agreement after construction in 2006 at a net discount rate of negative 1 percent (assumed 5 percent interest and assumed 6 percent annual increase in energy costs). Dividing the present-worth total cost for the intake by the volume of water delivered through it provides a unit cost for the water delivered through the intake of approximately $26/AF. This value must be added to the cost of the percolation basin itself.

Table 5: Present-Worth Costs for Mokelumne River Intake (2005 dollars)

Year	*PW Capitalization Cost*	*PW O&M*	*PW Cost*	*Volume Delivered (AF)*
2006	$ 3,452,941	$ -	$3,452,941	0
2007		$ 62,034	$ 62,034	8,250
2008		$ 62,661	$ 62,661	8,250
2009		$ 63,294	$ 63,294	8,250
2010		$ 63,933	$ 63,933	8,250
2011		$ 64,579	$ 64,579	8,250
2012		$ 65,231	$ 65,231	8,250
2013		$ 65,890	$ 65,890	8,250
2014		$ 62,287	$ 62,287	8,250
2015		$ 62,916	$ 62,916	6,000
2016		$ 63,551	$ 63,551	6,000
2017		$ 64,193	$ 64,193	6,000
2018		$ 64,842	$ 64,842	6,000
2019		$ 65,497	$ 65,497	6,000
2020		$ 66,158	$ 66,158	6,000
2021		$ 66,827	$ 66,827	6,000
2022		$ 67,502	$ 67,502	6,000
2023		$ 68,183	$ 68,183	6,000
2024		$ 68,872	$ 68,872	6,000
2025		$ 69,568	$ 69,568	6,000
2026		$ 70,271	$ 70,271	6,000
2027		$ 70,980	$ 70,980	6,000
2028		$ 71,697	$ 71,697	6,000
2029		$ 72,422	$ 72,422	6,000
2030		$ 73,153	$ 73,153	6,000
2031		$ 73,892	$ 73,892	6,000
2032		$ 74,638	$ 74,638	6,000
2033		$ 75,392	$ 75,392	6,000
2034		$ 76,154	$ 76,154	6,000
2035		$ 76,923	$ 76,923	6,000
2036		$ 77,700	$ 77,700	6,000
2037		$ 78,485	$ 78,485	6,000
2038		$ 79,278	$ 79,278	6,000
2039		$ 80,078	$ 80,078	6,000
2040		$ 80,887	$ 80,887	6,000
2041		$ 81,704	$ 81,704	6,000
2042		$ 82,530	$ 82,530	6,000
Totals	**$ 3,453,000**	**$ 2,535,000**	**$5,988,000**	**234,000**

Southerly recharge basin sites:

Percolation Rate – NRCS soil maps indicate the presence of a moderately rapid-draining sandy loam potentially underlain by shallow hardpan. Given the distance between the river and the regional basin sites and generic soil composition at the sites, this study's conservative estimate of 0.5 ft/day appears reasonable.

Available Acreage – The combined acreage on the suggested southerly site is approximately 123 acres, and should easily accommodate the 88 acres calculated for the recharge basin at a 0.5 ft/day percolation rate. The site also has the benefit of adjoining the WID's South Main Canal on both sides of the West Lane, which bisects the site.

Effect on Aquifer -- This area isn't as promising as the local sites for percolation rates, but the capacity to benefit the groundwater table by increasing groundwater elevations without losing water back to the river is greater. Again, city staff will need groundwater hydrology data to make an informed decision about which recharge site to select. The site is a mile south of the city's southern boundary and downgradient from the city's wells. Percolation could be expected to eventually raise the surface of the aquifer beneath the City of Lodi due to a backwater effect. The extent of overdraft in the existing aquifer makes estimations of when the aquifer would begin rising under the City of Lodi impossible without more data and analyses.

Water Source Proximity – The WID's South Main Canal runs adjacent to the Southerly percolation basin site, eliminating the need for an intake as required at the Northern sites.

Recharge Basin Cost

Table 6 contains the present-worth costs for the recharge basin[2] over the lifetime of the WID agreement, beginning from the earliest construction of the basin possible, in late 2005 (estimate begins at 2006 below). The total present-worth cost is divided by the total water to be developed through this alternative through 2042, for a present-worth unit cost of approximately $83/AF. Table 7 summarizes the present-worth unit costs for each of the basin sites.

Two elements could cause this estimate to vary substantially: percolation rate and excavation spoils use. The higher the percolation rate, the smaller the basin floor area required (and less water lost to evaporation). If investigation of the final recharge basin site were to determine the average rate to be 1.0 ft/day, the basin facility, including perimeter fencing, would require approximately 48 acres, rather than 88 acres. A 1 ft/day percolation rate would change the present-worth water unit price to $48/AF and increase the efficiency to 98 percent during years of water bank usage and 97 percent for the remainder of the agreement.

The City of Lodi could also reclaim the land used for the recharge basin at the end of the current, 40-year surface water agreement with Woodbridge Irrigation District if the

[2] Asssumes a net discount of 2 percent, given the relative independence of O&M to energy costs.

contract were not renewed. Given current population pressures, the value of the land will be considerable in 40 years. The capital construction costs above reflect allowing the contractor to sell the soil excavated. If the city retained the soil and stockpiled it, the capital costs for the project would rise considerably, depending on the distance from excavation to stockpile sites and the costs for excavation.

Figure 6 details the estimated timeline required for construction of the percolation basin and intake facilities. The timeline on Figure 6 assumes the contractor has an immediate use for the soil generated in construction of the percolation basins like a large subdivision or a dike-rebuilding project. This is the optimal scenario for the City. If the contractor didn't need soil immediately, the City would be faced with two options: pay the contractor to excavate and dispose of the soil immediately or allow the contractor to excavate the site in a more leisurely fashion, probably doubling the nine-month construction time allocated in the timeline on Table 6. If the City were to pay for the excavation, the City could see an increase in project cost of approximately $2,264,000 (566,000 CY of excavation at $4/CY) for a basin sized for a percolation rate of 0.5 ft/day. This would equate to a unit cost for the groundwater recharge basin of $94/AF for the Southerly site, $120/AF for the Northerly site. Doubling the construction time would make the percolation facility available at the end of the delivery season in 2007 at a cost of 6,000 AF of water, effectively driving the unit cost for the Southerly basin to $86/AF and $112/AF for the Northerly Basin.

Table 6: Present-Worth Costs for Groundwater Recharge Basin (2005 dollars)

Year	*PW Capitalization Cost*	*PW O&M*	*PW Cost*	*Volume Delivered (AF)*
2006	$ 18,475,000	$ -	$18,475,000	0
2007		$ 37,255	$ 37,255	8,250
2008		$ 36,524	$ 36,524	8,250
2009		$ 35,808	$ 35,808	8,250
2010		$ 35,106	$ 35,106	8,250
2011		$ 34,418	$ 34,418	8,250
2012		$ 33,743	$ 33,743	8,250
2013		$ 33,081	$ 33,081	8,250
2014		$ 32,433	$ 32,433	8,250
2015		$ 31,797	$ 31,797	6,000
2016		$ 31,173	$ 31,173	6,000
2017		$ 30,562	$ 30,562	6,000
2018		$ 29,963	$ 29,963	6,000
2019		$ 29,375	$ 29,375	6,000
2020		$ 28,799	$ 28,799	6,000
2021		$ 28,235	$ 28,235	6,000
2022		$ 27,681	$ 27,681	6,000
2023		$ 27,138	$ 27,138	6,000
2024		$ 26,606	$ 26,606	6,000
2025		$ 26,084	$ 26,084	6,000
2026		$ 25,573	$ 25,573	6,000
2027		$ 25,071	$ 25,071	6,000
2028		$ 24,580	$ 24,580	6,000
2029		$ 24,098	$ 24,098	6,000
2030		$ 23,625	$ 23,625	6,000
2031		$ 23,162	$ 23,162	6,000
2032		$ 22,708	$ 22,708	6,000
2033		$ 22,263	$ 22,263	6,000
2034		$ 21,826	$ 21,826	6,000
2035		$ 21,398	$ 21,398	6,000
2036		$ 20,979	$ 20,979	6,000
2037		$ 20,567	$ 20,567	6,000
2038		$ 20,164	$ 20,164	6,000
2039		$ 19,769	$ 19,769	6,000
2040		$ 19,381	$ 19,381	6,000
2041		$ 19,001	$ 19,001	6,000
2042		$ 18,628	$ 18,628	6,000
Totals	**$ 18,475,000**	**$ 969,000**	**$19,444,000**	**234,000**

Table 7: Present-Worth Unit Costs of Percolation Basins per Site Location (2005 dollars)

Percolation Basin Site	PW Basin Unit Costs ($/AF)	PW Intake Unit Costs ($/AF)	Total PW Unit Cost ($/AF)
Northerly	83	26	109
Southerly	83	0	83

Water Treatment Plant Alternative

Treatment and delivery for potable use would constitute a direct beneficial use of the WID water. Under this alternative, the City would divert Mokelumne River water from the South Main Canal, process it through a surface water treatment plant (SWTP), and pump it through a transmission system to interconnections with the existing water distribution system. The diversion would take place from March 1 to October 15 each year.[3] While using 6,000 AF in this timeframe results in an average diversion rate of 8.5 million gallons per day (mgd), a nominal capacity of 10 mgd was used in the analysis of the SWTP alternative to provide flexibility of plant operations and production rates. This flexibility can also absorb the 18,000 AF of banked water within approximately three and a half years if the plant is operated at full capacity year-round, although this scenario is not likely.

A surface water treatment plant is not 100 percent efficient, due to the generation of waste streams. Part of this can be recycled, but actual deliveries to the transmission and distribution system would average from 8.2 to 8.4 mgd, depending on the extent of waste stream disposal from the SWTP. (The remaining volume comprises filter backwash and solids.) Because 8.2 to 8.4 mgd is less than the average-day demand, the City would continue to operate some of the groundwater supply facilities during SWTP operation. The resultant intermixing of ground and surface water supplies within the distribution system then would intensify the need for compatible water quality, particularly as regards aesthetics, corrosion control, and disinfectant residual. For example, the surface water supply would contain a disinfectant residual as required by the drinking water regulations, and therefore, the City would need to maintain a compatible disinfectant residual in the groundwater supply.

Finished water from the SWTP would need to comply with the drinking water regulations as promulgated by United States Environmental Protection Agency (EPA) and the California Department of Health Services (DHS). Forthcoming additional EPA and DHS drinking water regulations include the Stage 2 Disinfectants/Disinfection Byproducts Rule and the Long Term 2 Enhanced Surface Water Treatment Rule. A range of SWTP design alternatives was considered in this analysis, including enhanced conventional

[3] This alternative would be improved by changing the contract with WID to allow for year-round delivery. The City could reduce its O&M costs associated with running groundwater wells and even decommission some wells for the duration of its contract with WID.

treatment and membrane filtration to ensure compliance with the current and forthcoming drinking water regulations.

According to the City's hydraulic modeling, the influx of surface water in the system would be used on the western side of the city during the 7.5 months of delivery.

Table 8 summarizes preliminary design criteria for the SWTP.

Table 8. Preliminary SWTP Design Considerations

Component	Requirements/Comments
Canal diversion structure	• 10 mgd screening capacity with one unit out of service • Flat screens in vertical slots • Flow control gates for isolation, removal and manual cleaning of screens from access platform above
Raw water pump station	• 10 mgd pumping capacity with one unit out of service • Control point for SWTP rate of flow
Raw water pipeline	• Single 24-inch diameter pipeline • Accommodations for periodic pigging and inspection
Raw water storage	None
Pretreatment	• 10 mgd combined capacity for conventional sedimentation basins, or 10 mgd with one unit out of service for mechanically intensive processes • Provisions to feed powdered activated carbon in case of unusual raw water quality conditions
Filtration	• 10 mgd capacity with one conventional filter or membrane cassette out of service • Granular media (anthracite/sand) or vacuum-driven membrane filters with integrity testing system
Post-filter adsorption	None
Disinfection	• Ozonation ahead of the filters • Ultraviolet (UV) light as primary disinfectant • Free chlorine as residual disinfectant
Corrosion control	• Chemical addition to ensure compatibility with other water supplies and various water supply conditions
Fluoridation	Not at this time
Finished water storage	• 1.0 MG capacity in single-cell structure
Finished water pump station	• 10 mgd capacity with one unit out of service
Instrumentation	• Adequate to coordinate SWTP operation with distribution system storage and other water supplies, and satisfy EPA and DHS reporting requirements
Electrical power	• Dual services or double-ended distribution system
Standby power	• Adequate to operate diversion facilities and SWTP at 10 mgd capacity for 12 hours
Wastewater, solids and storm water handling facilities	• Drying beds with landscaped buffer zone • Supernatant recirculation to SWTP • Storm water collection/storage/diversion as required by Applicable Law
Operations area	• Adequate to house SWTP staff, chemical storage and feed facilities, centralized control system, and laboratory and maintenance functions

Sanitary waste disposal	• Connection to City sewer system
Hazardous waste storage and disposal	• As required by Applicable Law
Chemical and fuel delivery and storage areas	• Secondary containment inside and outside (i.e., off-loading areas) with safe provisions for spill removal
Access and Security	• Gate-protected all-weather access road(s) with separate branches for staff, deliveries and public visitors • Site buffer and physical barriers • Building access controls and video surveillance system
Architecture	• Compatible with current and near-future surrounding residential neighborhoods • ADA compliant in administrative areas and OSHA compliant throughout SWTP • Sustainable design to conserve natural resources • Landscaping to enhance aesthetics yet conserve water
Cathodic protection and coating systems	• As needed to prevent corrosion of pipelines and other metallic infrastructure

The operation of a conventional SWTP or membrane filtration plant will generate filter backwash wastewater and pretreatment sludge as well as lesser volumes of sanitary, solid and hazardous waste. Because passive solids handling and dewatering systems are generally more cost-effective than mechanical dewatering systems, this analysis assumes that the backwash wastewater and pretreatment sludge would flow to nearby decanting and drying ponds, requiring approximately five acres of land area. (At $200,000/acre, the land would cost $1 million; a mechanical sludge handling system would cost approximately $2-$3 million in capital costs alone.) A recirculation system would deliver decanted supernatant from the ponds to the head of the SWTP. Periodically, the City would isolate a pond, further dewater its contents, remove the dewatered solids, and either dispose of the dewatered solids at a landfill or land application site or utilize the solids in a co-composting facility. A modern SWTP incorporating recycling would be 99.5 percent efficient or better.

Table 9 summarizes the construction cost estimate for the SWTP prior to factoring in contingencies and other cost line items.

Table 9. Construction Cost Estimate for SWTP (2005 Dollars)*

Cost Component	Estimated Cost, dollars
Mobilization/demobilization	800,000
General conditions	400,000
Bonds and insurance	1,250,000
Roads, grading, etc.	750,000
Landscaping and irrigation	750,000
Yard piping	1,500,000
Water treatment systems	
Pretreatment	1,500,000
Ozone generators and contactors	2,000,000
Filter equipment, piping and structures	2,500,000
UV equipment and building space	1,000,000
Chemical storage and feed systems	1,600,000
Solids handling system	1,000,000
Finished water reservoirs	1,000,000
Finished water pump station	1,000,000
Operations building	500,000
Electrical, instrumentation and control systems, including standby power	2,630,000
Start-up and acceptance testing	750,000
Total (Rounded)	***20,930,000***

* For the purposes of comparison, a 15 mgd plant in Clovis, CA cost $26.0 million to construct in 2002. A 30 mgd plant in Fresno, CA cost $31.5 million to construct in the same year. Both costs are construction only - without engineering, etc. Economies of scale apply to SWTP construction, so a lower capacity plant tends to have a higher unit cost ($/mgd).

The City is considering several alternative locations for the canal diversion and SWTP. This analysis provides a transmission system north to Turner Road, and south along the west side of the South Main Canal as far as Harney Lane, with six connections to the existing system (Fig. 2).

The total capital cost of the SWTP alternative, including transmission mains, contingencies and other cost line items, is provided in Table 10.

Table 10. Total Capital Cost of SWTP Alternative

Cost Component	Factor, percent	Length, feet	Diameter, inches	Unit Cost, dollars	March 2005, dollars	Mid-Point of Construction[1]
Finished water pipeline w/restoration	—	6,050	12	157	$ 950,000	$ 1,223,000
Finished water pipeline w/restoration	—	3,200	18	185	$ 592,000	$ 762,000
Finished water pipeline w/restoration	—	13,500	24	235	$ 3,173,000	$ 4,084,000
10 mgd enhanced conventional SWTP	—	—	—	—	$20,930,000	$26,950,000
Subtotal					**$ 25,647,000**	**$ 33,018,000**
Construction contingency - pipelines	20	—	—	—	$ 943,000	$ 1,214,000
Construction contingency – other facilities	25	—	—	—	$ 5,233,000	$ 6,737,000
Subtotal					**$ 31,823,000**	**$ 40,969,000**
Engineering and other fees - pipelines	15	—	—	—	$ 849,000	$ 1,092,000
Engineering and other fees – other facilities	20	—	—	—	$ 5,233,000	$ 6,737,000
Subtotal					**$ 37,905,000**	**$ 48,798,000**
Property acquisition[2]	—	—	—	—	$ 1,000,000	$ 1,000,000
CEQA/NEPA[3]	—	—	—	—	$ 1,000,000	$ 1,000,000
Total					**$ 39,905,000**	**$ 50,798,000**

[1] Escalated at ten percent per year to March 2008.
[2] Five acres for sludge drying beds @ $200,000/acre.
[3] Placeholder value.

The operations and maintenance (O&M) cost of the SWTP alternative is estimated as approximately $1,350,000/year for personnel (a plant operator and six operator/technicians), chemical purchases, equipment repair and replacement, sludge disposal, and other miscellaneous O&M cost line items. The total energy cost is estimated as $770,000 per year assuming a finished water pump station discharge pressure of 80 psi. Prorating these O&M costs for 7.5 months of SWTP operation results in an annual O&M cost of $1,315,000/year. If the plant were operated year-round

(requiring a variance in the City's agreement with WID) to deplete the banked water, annual O&M costs would become $2,120,000.

Because the O&M cost are tied to supplies and energy costs, their rate of inflation is calculated at six percent per year for this study. With an estimated interest rate of 5 percent, the net discount rate is -1 percent. Table 11 shows the annual costs associated with the water treatment plant alternative, with operation beginning in 2009.

The total present-worth costs for the SWTP alternative divided by the amount of water used from the WID agreement less the cost for pumping groundwater yields a present-worth unit cost of $410/AF.

The two years spent constructing the treatment facility would mean a loss of 12,000 AF for the City of Lodi because the 18,000-AF water bank would be full.

Table 11: Water Treatment Plant Present-Worth Costs (2005 dollars)

Year	*PW Annual Capitalization Cost*	*PW O&M*	*PW Annual Cost*	*Volume Delivered (AF)*
2008	$51,000,000	$0	$51,000,000	0
2009		$1,471,309	$1,471,309	8,090
2010		$2,229,256	$2,229,256	11,202
2011		$2,251,773	$2,251,773	11,202
2012		$2,274,519	$2,274,519	11,202
2013		$1,425,096	$1,425,096	6,304
2014		$1,439,491	$1,439,491	6,000
2015		$1,454,031	$1,454,031	6,000
2016		$1,468,719	$1,468,719	6,000
2017		$1,483,554	$1,483,554	6,000
2018		$1,498,540	$1,498,540	6,000
2019		$1,513,676	$1,513,676	6,000
2020		$1,528,966	$1,528,966	6,000
2021		$1,544,410	$1,544,410	6,000
2022		$1,560,010	$1,560,010	6,000
2023		$1,575,768	$1,575,768	6,000
2024		$1,591,685	$1,591,685	6,000
2025		$1,607,762	$1,607,762	6,000
2026		$1,624,002	$1,624,002	6,000
2027		$1,640,406	$1,640,406	6,000
2028		$1,656,976	$1,656,976	6,000
2029		$1,673,713	$1,673,713	6,000
2030		$1,690,620	$1,690,620	6,000
2031		$1,707,697	$1,707,697	6,000
2032		$1,724,946	$1,724,946	6,000
2033		$1,742,370	$1,742,370	6,000
2034		$1,759,969	$1,759,969	6,000
2035		$1,777,747	$1,777,747	6,000
2036		$1,795,704	$1,795,704	6,000
2037		$1,813,842	$1,813,842	6,000
2038		$1,832,164	$1,832,164	6,000
2039		$1,850,671	$1,850,671	6,000
2040		$1,869,364	$1,869,364	6,000
2041		$1,888,247	$1,888,247	6,000
2042		$1,907,320	$1,907,320	6,000
Totals	**$51,000,000**	**$57,875,000**	**$108,875,000**	**222,000**

Figure 7 details the estimated timeline required for construction of the SWTP and delivery facilities.

Alternative Comparison

This study uses the following criteria to suggest an alternative for further refinement.

Minimize unit cost –The average treated water unit cost of $410/AF is approximately five times that of the Southerly percolating basin.

Use of entire volume purchased from WID – Alternatives should develop the full 6,000 AF annual allocation and absorb the 18,000 AF banked with WID by the end of the contract. All alternatives can do this.

Maximize public acceptance – The primary issue under this criterion can be found in the City Council's disinclination to accept chlorination of the City's potable water supply. The treatment alternative would require chlorination.

Implement quickly – If an alternative cannot be implemented by March 1, 2007, water purchased by the City will be lost until a solution is placed in service.

Minimize environmental repercussions – Groundwater percolation basins can become a source for disease vectors by becoming mosquito breeding-grounds, though proper wet/dry cycling can minimize this. Treatment requires production and disposal of solids, an environmental nuisance. All alternatives have some negative environmental repercussions; a toss-up.

Maximize use of water by City – The selected alternative should maximize the percentage of WID water that can be put to use by the City. The Northerly basin sites have the potential to lose significant amounts of water back into the Mokelumne River. Similarly, the percentage of WID water that could be recovered from the Southerly basin site could be low due to loss of recharged water to areas outside of the City's groundwater sphere of influence.

Recommended Alternative

Table 12 represents a decision matrix built on the criteria above. The "+" indicates alternatives that pass the criterion, and a "-" indicates those not passing.

Table 12: Decision Matrix for Surface Water Implementation

Alternates	*Criteria*						
	Capital Cost (2005 dollars)	*Minimize unit cost*	*Use entire volume purchased from W.I.D.*	*Maximize public acceptance*	*Implement quickly*	*Minimize environmental repercussions*	*Maximize use of water by the City**
Groundwater Recharge Basin (Southerly)	**$ 18,475,000**	**+**	**+**	**+**	**+**	**+**	**-**
Surface Water Treatment Plant	**$ 51,000,000**	**-**	**+**	**-**	**-**	**+**	**+**

* The use of the water in the case of a percolation basin does not equate to direct benefit to the City of Lodi. Recovery from groundwater percolation is dependent on a host of variables outside the scope of this study, such as site selection and groundwater hydrology.

The qualitative comparison in Table 12 does not present a compelling technical case for one alternative over the other. The Southerly recharge alternative appears to provide balanced overall benefit to the City of Lodi and the region while minimizing further costs associated with surface water implementation. The water treatment plant alternative would provide the most tangible benefit to the City, but at a higher cost and a longer implementation period. Ultimately, the decision must incorporate some form of weighting of the criteria in discussions with the City policy-makers.

Interim Raw Water Usage Plan

The interim raw water usage plan would provide raw water to public facilities currently irrigated from the City's potable water system. This parallel, raw-water system would have no connection to the potable water system, and would eventually be used to provide recycled water to these same properties. In the interim, the city could use the system to provide raw water from the WID contract from the South Main Canal.

Layout

The initial layout of the interim water plan follows the proposed routing for the recycled water plan suggested by City staff (Figure 3).

The interim plan would require a pumping station at the WID South Main Canal on the northwest corner of Beckman Park. This pump station would provide approximately 150 feet of head to provide 60 psi to all parks and schools, a typical value for other municipal sprinkler irrigation systems.

In modeling the irrigation demands, city staff have used the following demands from the "Surface Water Supply Options Study."

Table 13: Irrigation Demands per Acre

Facility Irrigation	AF/acre*
Parks	2.62
Schools	2.03

* Based on actual 2002 usage and gross parcel acreages.

This study also used these values to generate demand estimates, and assumed that this water must be delivered during the WID delivery, between March 1 and October 15. City staff also noted city irrigation facilities are irrigated for five hours every other night. Park lands would then require 25 gpm per acre during that five-hour irrigation period, and schools would demand 20 gpm per acre.

City staff asked that facilities in Table 14 be included in the system for irrigation. Table 10 also provides the acreage and corresponding demand for each park based on a five-hour rotation every other night.

Table 14: Irrigation Demands at Selected Facilities

Facility	Gross Estimated Acreage	Unit Demand (AF/acre)	Annual Demand (AF)	Demand (gpm)
Peterson Park	20.4	2.62	53.4	509
Henry Glaves Park	13.4	2.62	35.2	335
Reese School	8.8	2.03	17.8	170
Lodi High School	44.2	2.03	89.6	854
Vinewood Park and School	20.1	2.33	46.6	444
Lodi Middle School	19.2	2.03	39.0	372
Kofu Park	8.7	2.62	22.7	216
Tokay High School	49.2	2.03	99.8	951
Beckman Park	15.7	2.62	41.1	392
DeBenedetti Park	26.8	2.62	70.2	669
Total	**226**		**515**	**4,912**

A preliminary schedule of the irrigation rotation should be arranged to spread the supply as evenly as possible between evenings and five-hour irrigation blocks. Table 15 includes a sample schedule with a maximum flow of approximately 1,350 gpm.

Table 15: Preliminary Irrigation Schedule for Selected Facilities

	First five hours			*Second five hours*		
	Facility	*Estimated Irrigated Acreage*	*Demand (gpm)*	*Facility*	*Estimated Irrigated Acreage*	*Demand (gpm)*
First Night	Reese School	8.8	170	Beckman Park	15.7	392
	Vinewood Park and School	20.1	444	Tokay High School	49.2	951
	Peterson Park	20.4	509			
	Total		**1,123**	**Total**		**1,343**
Second Night	Kofu Park	8.7	216	Lodi Middle School	19.2	372
	Henry Glaves Park	13.4	335	Lodi High School	44.2	854
	DeBenedetti Park	26.8	669			
	Total		**1,221**	**Total**		**1,226**

The pipeline used in this project will become part of a larger recycled water use effort. Because the growth in the system will occur on the west side of the recycled water delivery system, this eastern portion is sized for this study as a 12-in. diameter, PVC irrigation pipeline.

When this system is used as a raw-water delivery system, crews will occasionally have to use flushing hydrants downstream of the pump to move sediment out of the pipes because flow rates can be as low as 1.4 feet per second (between the tee near Mills and the future connection point near Evergreen and Paradise) during operation, and velocities during the day will be zero. The minimum velocity to re-suspend settled sediments would be 5 feet per second.

The pumping station specified for this study is mounted in a small skid building, an electrically-driven station that can be moved to other sites when needed. The South Main canal bank at Beckman Park would be penetrated with a 36-in. reinforced concrete pipe that would terminate in a 60-in. manhole (Figure 5). This manhole would serve as a wet well for the temporary pump intake. The canal bank itself would be modified to allow a slide gate to seal the pipe when not in use. The pump outlet's 8-in. flexible hose would connect to a length of 8-in. PVC pipe daylighting in Beckman Park. This would be connected through a 8x12-in. reducer to a 12-in. tee at Century Boulevard.

The pipe downstream of the pump station would be fitted with periodic one-inch combination air/vacuum valves to allow the pipe to fill and release the air the pump station would entrain, and allow air to enter the pipe during shutdown and drain periods. Isolation valves are anticipated in the raw water line on either side of major crossings, such as the bore and jack under the South Main Canal near Century Boulevard and

upstream of all delivery points. In addition, the system would include two flushing hydrants along the WID South Main Canal, one at Peterson Park, and one at each of Lodi and Tokay high schools.

This study assumes a three-phase, 480-V electrical supply is available near the pump station site at the northwest corner of Beckman Park.

The interim water supply would deliver approximately 4.5 acre-feet of water every two-night cycle, or about 515 acre-feet during the WID delivery period.

Table 16: Estimated Capital Cost for Interim Raw Water System (2005 Dollars)

Description	Qty	Unit	Unit Price	Rounded Capital Cost
Temporary Pump Station	1	LS	$ 76,300	$ 77,000
12-in. SDR-32.5 PVC Pipe	16,070	LF	$ 64	$1,029,000
Pipeline appurtenances/fittings	1	LS	$102,900	$ 103,000
Paving	11,650	SY	$ 50	$ 583,000
Mobilization	1	LS	$ 25,100	$ 26,000
Bore & Jack S. Main Canal	160	LF	$ 450	$ 72,000
Subtotal				**$1,818,000**
Construction Contingency (20%)	1	LS	$142,400	$ 143,000
Engineering and Other Fees (15%)	1	LS	$106,800	$ 107,000
Subtotal				**$2,068,000**
CEQA and Permitting	1	LS	$100,000	$ 100,000
Total				**$2,168,000**

Current electrical rates indicate annual operation will cost approximately $21,500 per year. With a quarter-time personnel salaried at $50,000 (with a 1.4 benefit factor) attending the system for the 7.5 months of operation ($11,000) and $9,500 annually for parts and startup/shutdown maintenance, annual O&M becomes $42,000.

The unit cost for the City to operate the interim raw water system would be reduced by the same $80/AF found in the SWTP alternative, and for the same reason: the water delivered by this system would reduce the groundwater pumping necessary through the existing potable water system.

The unit cost could vary depending on irrigation methods used. This study anticipates a screen mounted in a manhole will filter large particles out of the raw water before they are pumped. Larger-nozzle irrigation devices will be able to use the resulting water, but a drip system would not. If a raw-water system is implemented, the City of Lodi maintenance personnel will have to analyze their system to either implement a finer filter at the pump intake or mechanical strainer at the pump discharge for drip-irrigation lines or keep the drip-irrigation lines on the potable water system.

Experience with other, parallel raw- and treated-water systems has shown that the Department of Health Services will scrutinize of this interim system carefully to avoid the possibility of cross-connections between raw and treated water piping.

Though unit costs will decrease with the time the system is in operation, costs are provided here for the duration of the WID agreement to make it comparable with the other alternatives. Table 17 shows the present-worth costs for the interim system using a net discount rate of -1%. These costs include components that could be used in a recycled water distribution system. The total present-worth costs divided by the total water used by the system less the $80/AF savings in groundwater pumping determines the present-worth unit cost of the water, $135/AF.

Figure 8 details the estimated timeline required for construction of the interim system.

Table 17: Present-Worth Costs for Interim System (2005 dollars)

Year	*PW Capitalization Cost*	*PW O&M*	*PW Cost*	*Volume Delivered (AF)*
2006	$ 2,168,000	$ 42,424	$2,210,424	309
2007		$ 42,853	$ 42,853	515
2008		$ 43,286	$ 43,286	515
2009		$ 43,723	$ 43,723	515
2010		$ 44,164	$ 44,164	515
2011		$ 44,611	$ 44,611	515
2012		$ 45,061	$ 45,061	515
2013		$ 45,516	$ 45,516	515
2014		$ 45,976	$ 45,976	515
2015		$ 46,441	$ 46,441	515
2016		$ 46,910	$ 46,910	515
2017		$ 47,383	$ 47,383	515
2018		$ 47,862	$ 47,862	515
2019		$ 48,346	$ 48,346	515
2020		$ 48,834	$ 48,834	515
2021		$ 49,327	$ 49,327	515
2022		$ 49,825	$ 49,825	515
2023		$ 50,329	$ 50,329	515
2024		$ 50,837	$ 50,837	515
2025		$ 51,351	$ 51,351	515
2026		$ 51,869	$ 51,869	515
2027		$ 52,393	$ 52,393	515
2028		$ 52,922	$ 52,922	515
2029		$ 53,457	$ 53,457	515
2030		$ 53,997	$ 53,997	515
2031		$ 54,542	$ 54,542	515
2032		$ 55,093	$ 55,093	515
2033		$ 55,650	$ 55,650	515
2034		$ 56,212	$ 56,212	515
2035		$ 56,780	$ 56,780	515
2036		$ 57,353	$ 57,353	515
2037		$ 57,933	$ 57,933	515
2038		$ 58,518	$ 58,518	515
2039		$ 59,109	$ 59,109	515
2040		$ 59,706	$ 59,706	515
2041		$ 60,309	$ 60,309	515
2042		$ 60,918	$ 60,918	515
Totals	**$ 2,168,000**	**$ 1,892,000**	**$4,060,000**	**18,849**

Summary

This technical memorandum addresses the implementation of surface water supply for the City of Lodi from its WID agreement. Several assumptions must be validated prior to proceeding with the projects presented in this technical memorandum.

Table 18: Primary Study Assumptions

Assumed variable	Factor
Groundwater recharge percolation rate	0.5 ft/day
Net discount rate for labor-dominated O&M costs	2 percent
Net discount rate for energy- and materials-dominated O&M costs	-1 percent
Land acquisition cost	$200,000/acre
Irrigation inlet pressure at parks and schools	60 psi

Given these assumptions, the alternatives analyzed have the unit costs shown in Table 19.

Table 19: Cost per Acre-Foot for Alternatives Studied (2005 dollars)

Alternative	Unit Cost ($/AF)
Northerly Groundwater Recharge Percolation Basin	109
Southerly Groundwater Recharge Percolation Basin	83
Surface Water Treatment Plant and Pipelines*	410
Interim Raw Water Delivery System*	135

*These unit costs include savings from reduced groundwater pumping at existing wells.

KINNESON LN.
E. VICTOR RD.
MOKELUMNE RIVER
99
NORTHERLY RECHARGE BASIN SITES
UNION PACIFIC R.R.
PEARSON RD.
E. ARMSTRONG
E. MORSE RD.
SOUTHERLY RECHARGE BASIN SITES
S. HUTCHINS ST.
LODI
N. HAM LN.
LODI MUNICIPAL LAKE
SOUTHERN PACIFIC R.R.
N. WEST LN.
W.I.D. S. MAIN CANAL
CENTURY
HARNEY LN.
W. KETTLEMAN LANE/HWY 12
LOWER SACRAMENTO RD.
SARGENT
TURNER

N

0 1250 2500
SCALE IN FEET

Figure 1

City of Lodi
FULL SURFACE WATER IMPLEMENTATION STUDY

PROPOSED SITE LOCATIONS, GROUNDWATER RECHARGE PERCOLATION BASINS

AVAILABLE SITE ACREAGES

NORTHERLY RECHARGE BASIN	13 AC
	22 AC
	9.2 AC
	9.6 AC
	21.5 AC
	75.3 AC
SOUTHERLY RECHARGE BASIN	62 AC
	61 AC
	123 AC

WEST YOST & ASSOCIATES

X:\Clients\809 Lodi\Figures\809-08-0501-Fig1PercBasins.dwg 5-23-05 09:57:30 AM CEwers

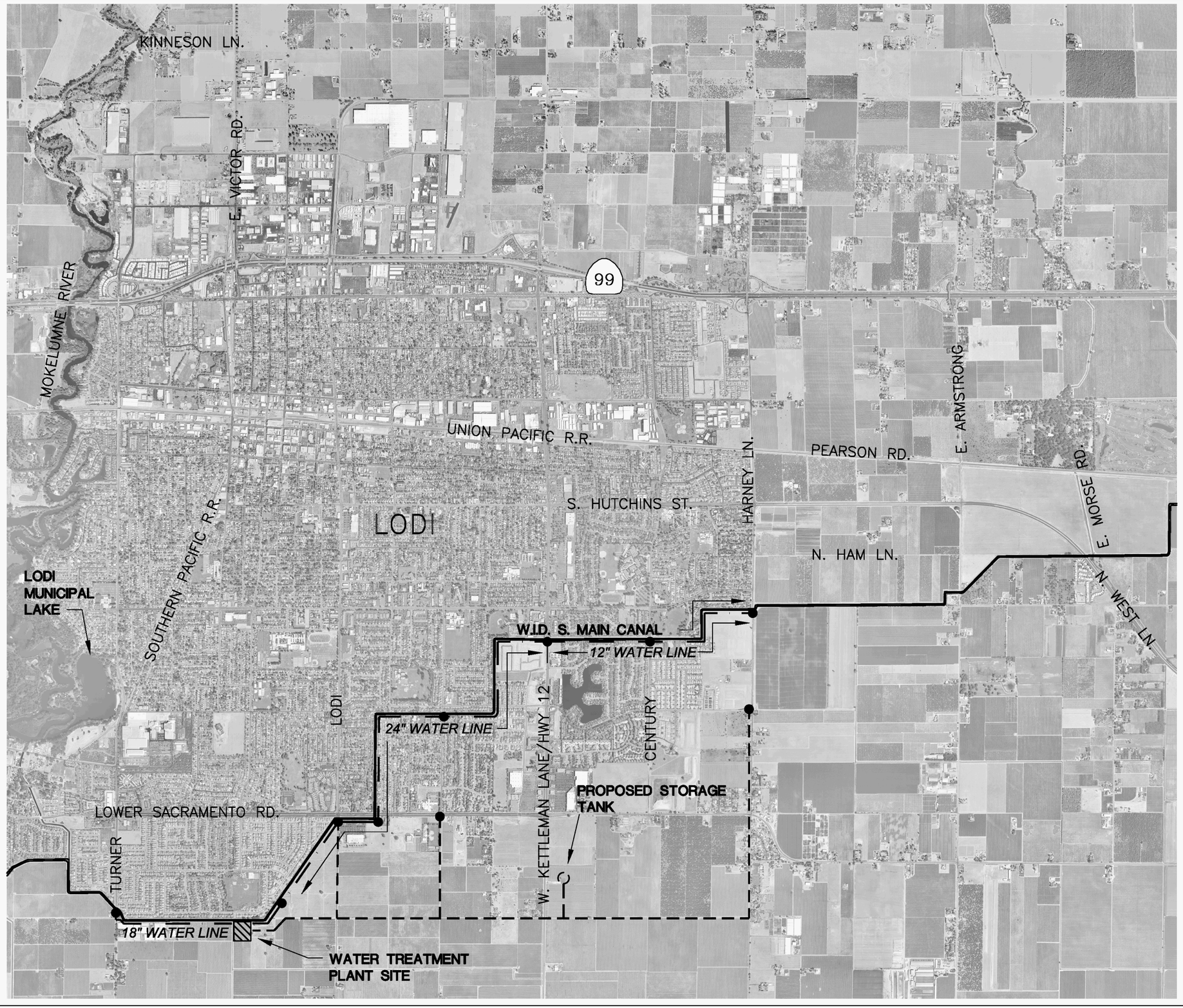

Figure 2

City of Lodi
FULL SURFACE WATER IMPLEMENTATION STUDY

PROPOSED SITE LOCATIONS, WATER TREATMENT ALTERNATIVE

AVAILABLE SITE ACREAGE

WATER TREATMENT PLANT	4.8 AC

— · — · — PROPOSED TRANSMISSION MAINS TO DISTRIBUTE TREATED SURFACE WATER TO CITY

– – – – – – – PROPOSED TRANSMISSION MAINS TO SUPPORT FUTURE DEVELOPMENT

● POINT OF CONNECTION TO EXISTING SYSTEM

N

0 1250 2500
SCALE IN FEET

WEST YOST & ASSOCIATES

X:\Clients\809 Lodi\Figures\809-08-0501-Fig2SWTP.dwg 6-06-05 03:13:14 PM CEwers

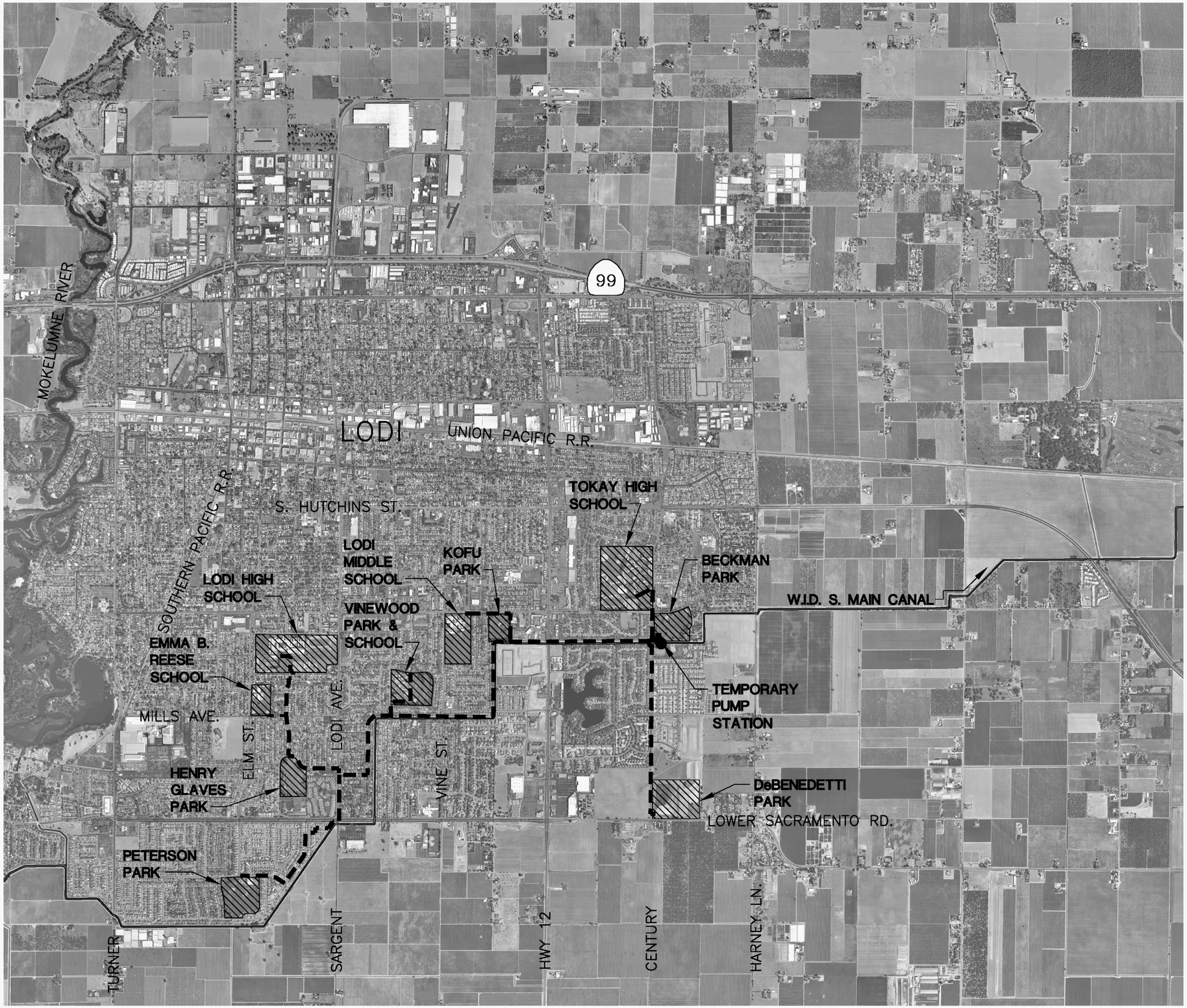

Figure 3

City of Lodi
FULL SURFACE WATER IMPLEMENTATION STUDY

INTERIM RAW WATER DISTRIBUTION SYSTEM

LEGEND

SCHOOLS AND PARKS TO BE IRRIGATED WITH SURFACE WATER SUPPLY

INTERIM RAW WATER PIPELINE

CANAL

N

0 1250 2500
SCALE IN FEET

WEST YOST & ASSOCIATES

X:\Clients\809 Lodi\Figures\809-08-0501-Fig2.dwg 5-23-05 10:56:34 AM CEwers

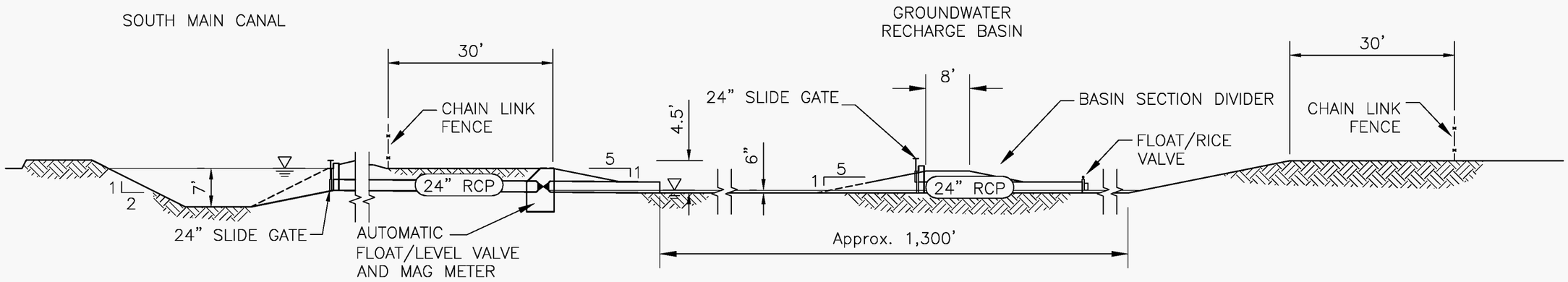

Figure 4

City of Lodi
SOUTH MAIN CANAL INTAKE AT ARMSTRONG RD.
TYPICAL GROUNDWATER RECHARGE
BASIN SECTION

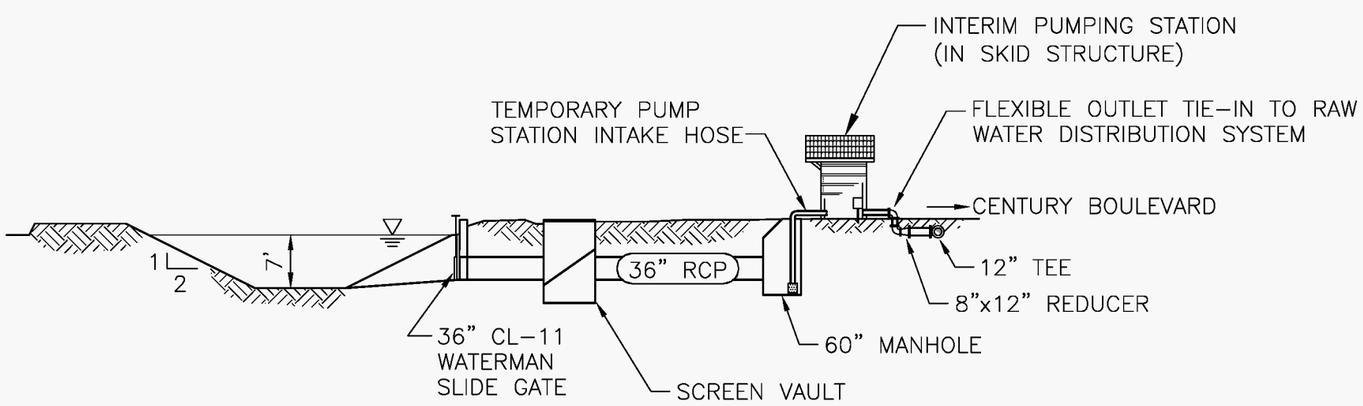

Figure 5

City of Lodi
SOUTH MAIN CANAL INTAKE FOR
INTERIM RAW WATER SUPPLY

WEST YOST & ASSOCIATES

X:\Clients\809 Lodi\Figures\809-08-0501-Figs3 & 4.dwg 5-23-05 04:03:50 PM CEvers

City of Lodi
Full Surface Water Implementation Study

Figure 6:

TImeline, Groundwater Recharge Basin Design and Construction

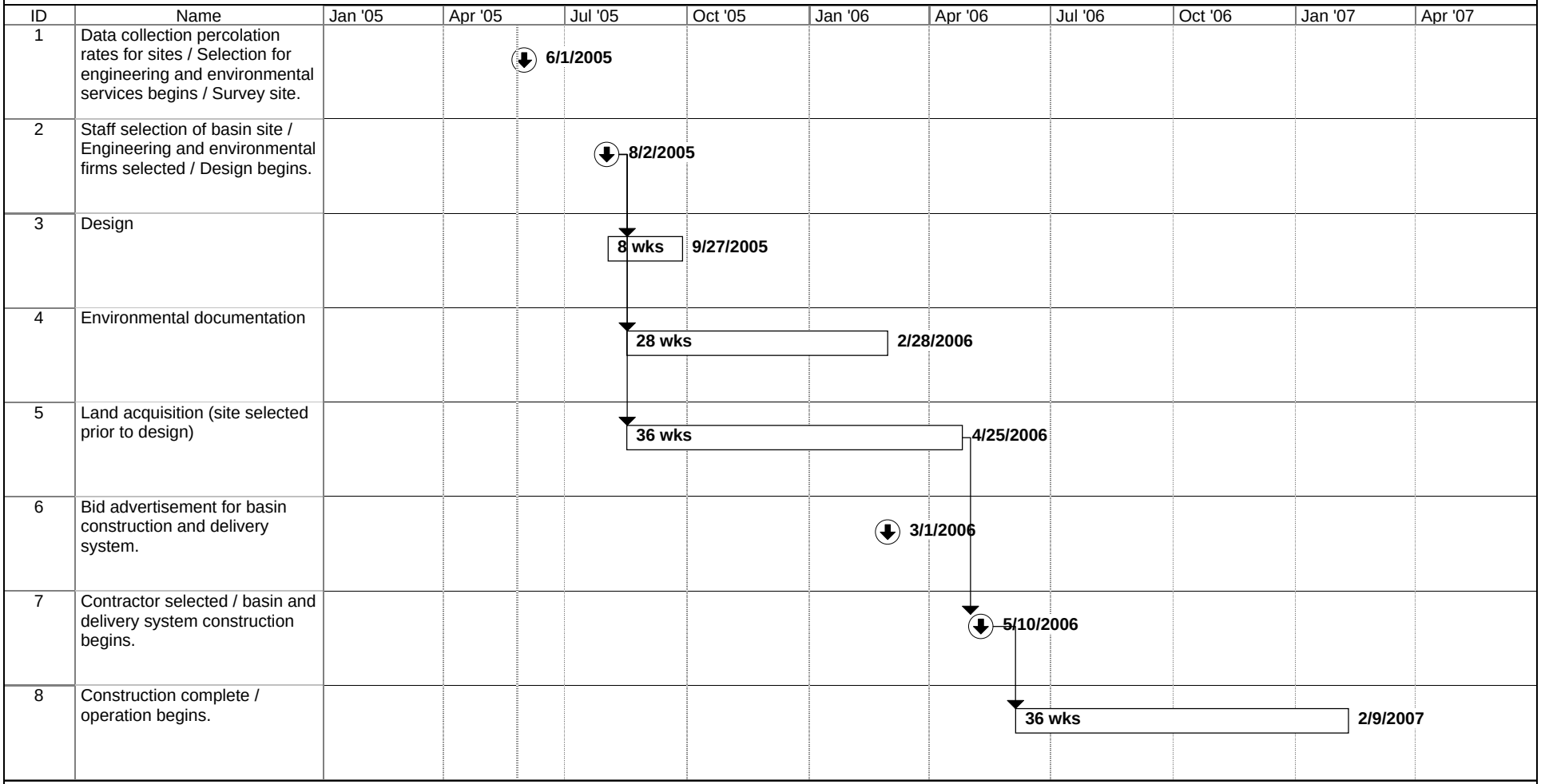

WEST YOST & ASSOCIATES

City of Lodi
Full Surface Water Implementation Study

Figure 7:

Timeline, SWTP Design and Construction

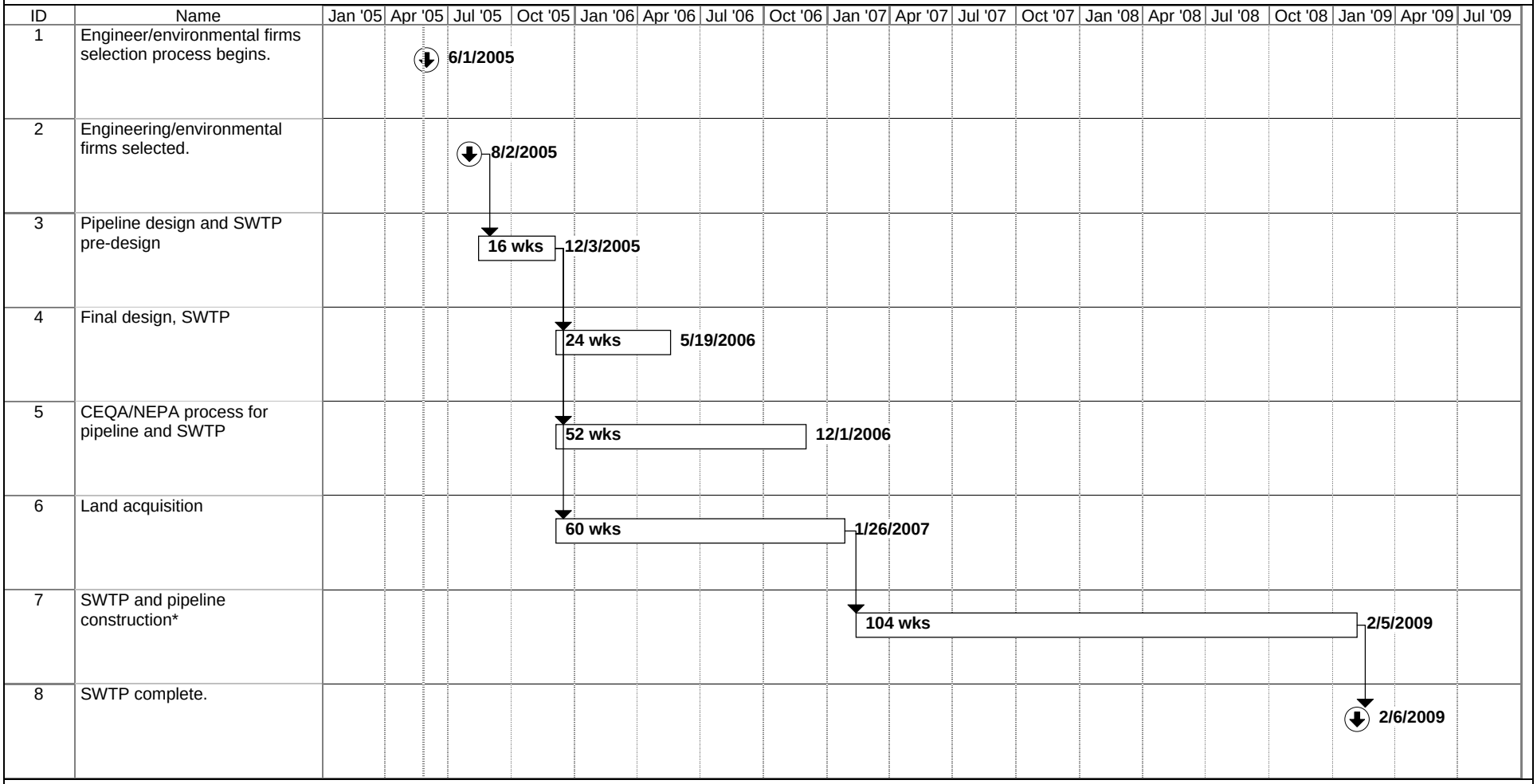

* Substantial completion could precede final completion by six months.

This timeline assumes an environmental impact report will be required for the SWTP, and that a mitigated negative declaration will be possible for the pipelines.

WEST YOST & ASSOCIATES

City of Lodi
Full Surface Water Implementation Study

Figure 8:

Timeline, Interim System Design and Construction

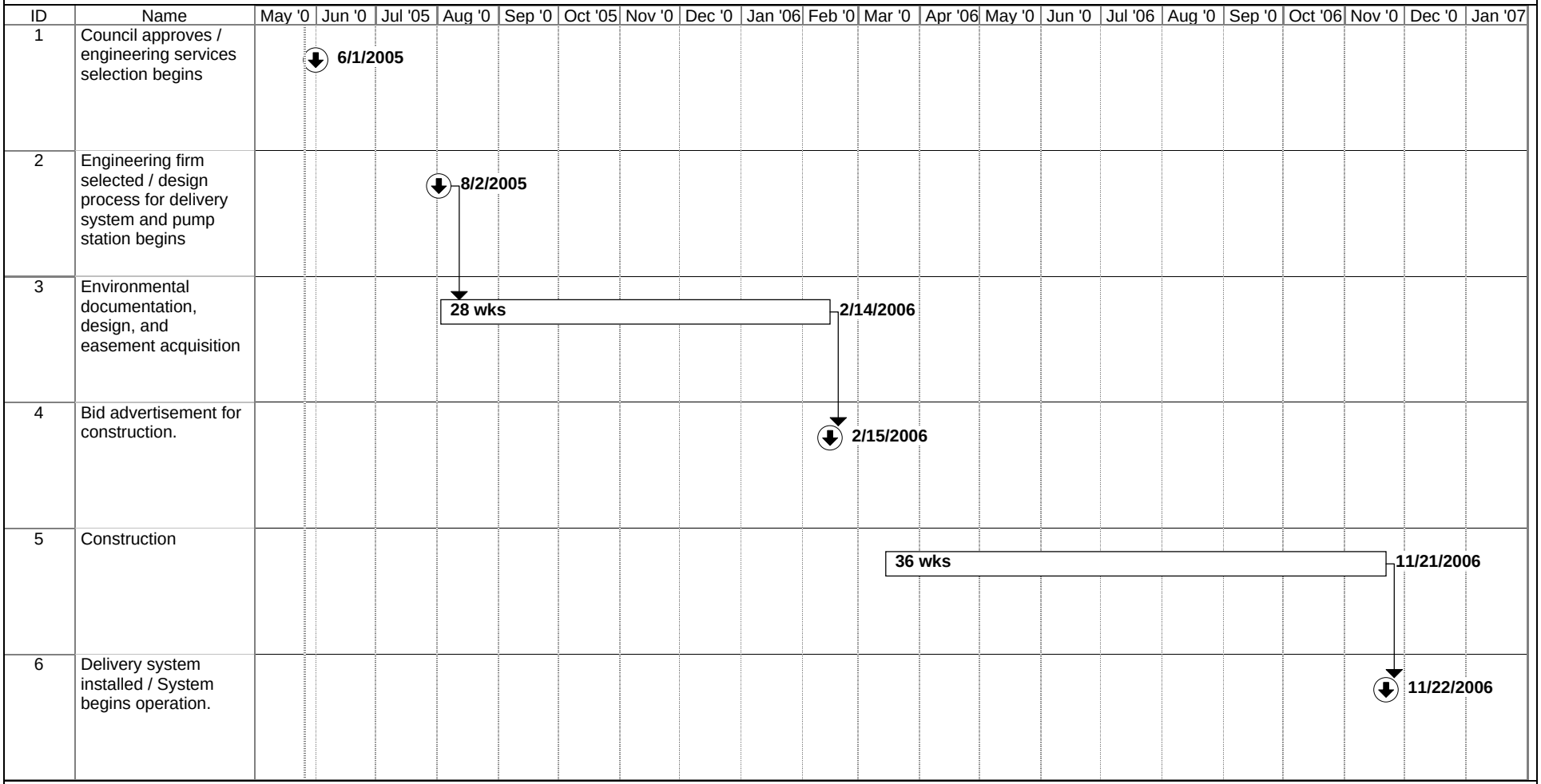

WEST YOST & ASSOCIATES

City Council Presentation

WID Surface Water Action Plan

November 1, 2005

Fork in the Road

Current & Supplemental Water Supplies

Recharge

SWTP/ Direct Use

Why Go To A Conjunctive Use System?

- Uncertainty of Regulations
- Centralized Solution
- Diversification of Supply Portfolio

  (increases supply reliability)
- Conversion of Agricultural Land with Surface Water Entitlements to Urbanized Areas

Existing Conditions

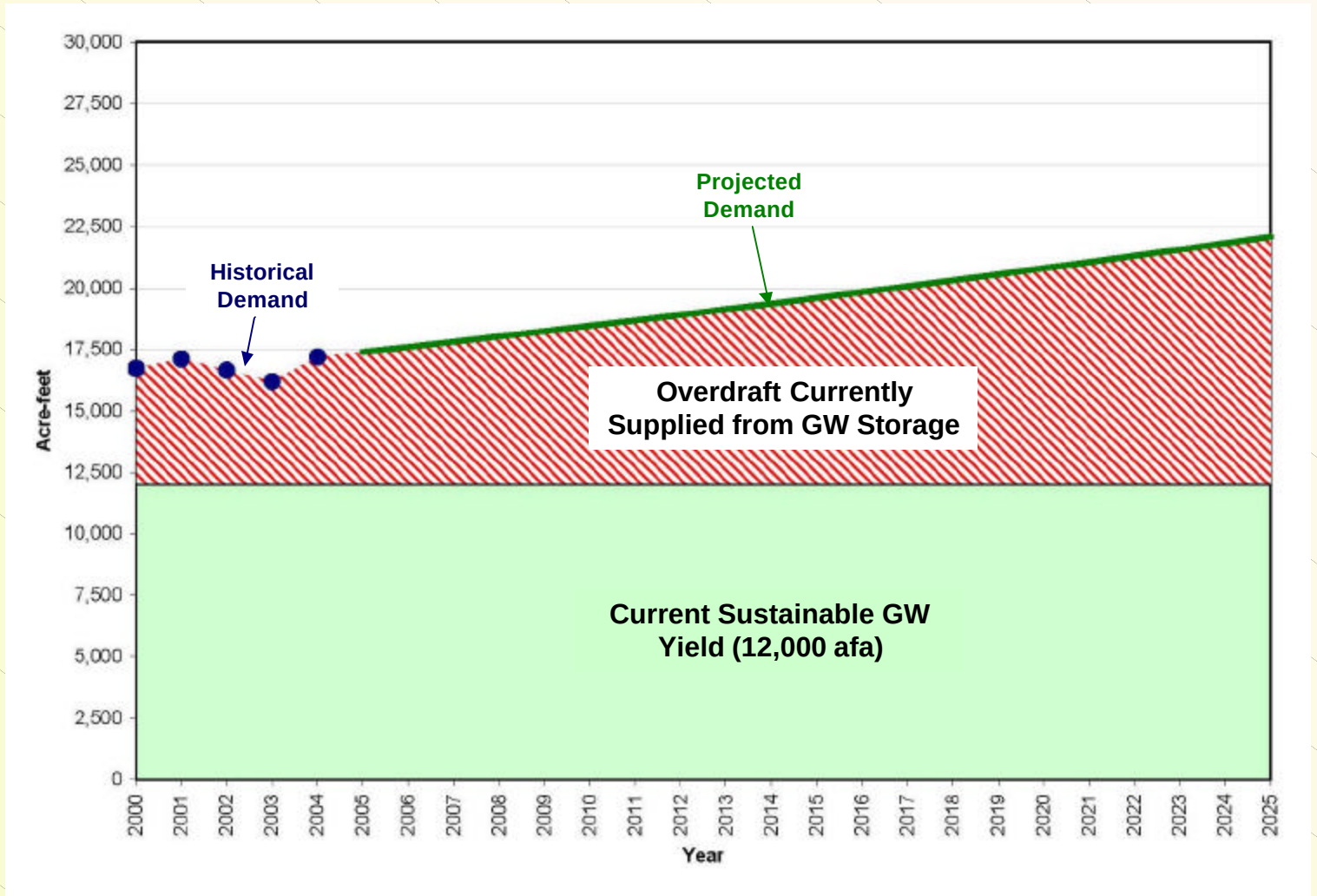

Current Groundwater Supply

- Groundwater levels dropping about 0.35 feet/year
- Portions of the aquifer are contaminated
- Several City wells have treatment systems to remove contaminants
- Supply currently provided from water main grid and evenly placed well sites
- More wells will be needed to meet future demands

WID Water Purchase

- 2002 water purchase agreement with WID
- 40 year term
- 6,000 acre-feet/year from March 1 through October 15 each year
- Annual cost $1.2 million ($200/afa)
- Can bank unused water (up to 18,000 af)
- Additional water can be purchased from October 15 through April 30 for $100/afa
- Very high quality surface water

Immediate Program Needs

- Incorporate WID Water into City's Water Supply Portfolio – Use It
- Address Water Demands of New Development
- Implement Immediate Strategy for Sale of Unused Water

Water Supply Options

- Immediate Options
  - Sell WID Water
  - Groundwater Recharge
  - Combination of Both
- Long Term Options
  - Treat and Drink
  - Groundwater Recharge
  - Combination of Both

Immediate Options

- Sell WID Supply
  - Sale May Include All or Portion of 6,000 acre-feet/year
  - Time Frame 1-5 Years
  - Looking for Buyers Now

Groundwater Recharge Basins

- Facilities – diversion structure, raw water pipeline, recharge basins
- Unit cost – in range of $90/af to $120/af
- Supply vulnerable to ongoing groundwater contamination issues
- May not provide full recovery of recharged water
- Disinfection with chlorine likely required in future
- Relatively short implementation time

Potential Site Location - GW Recharge Basins

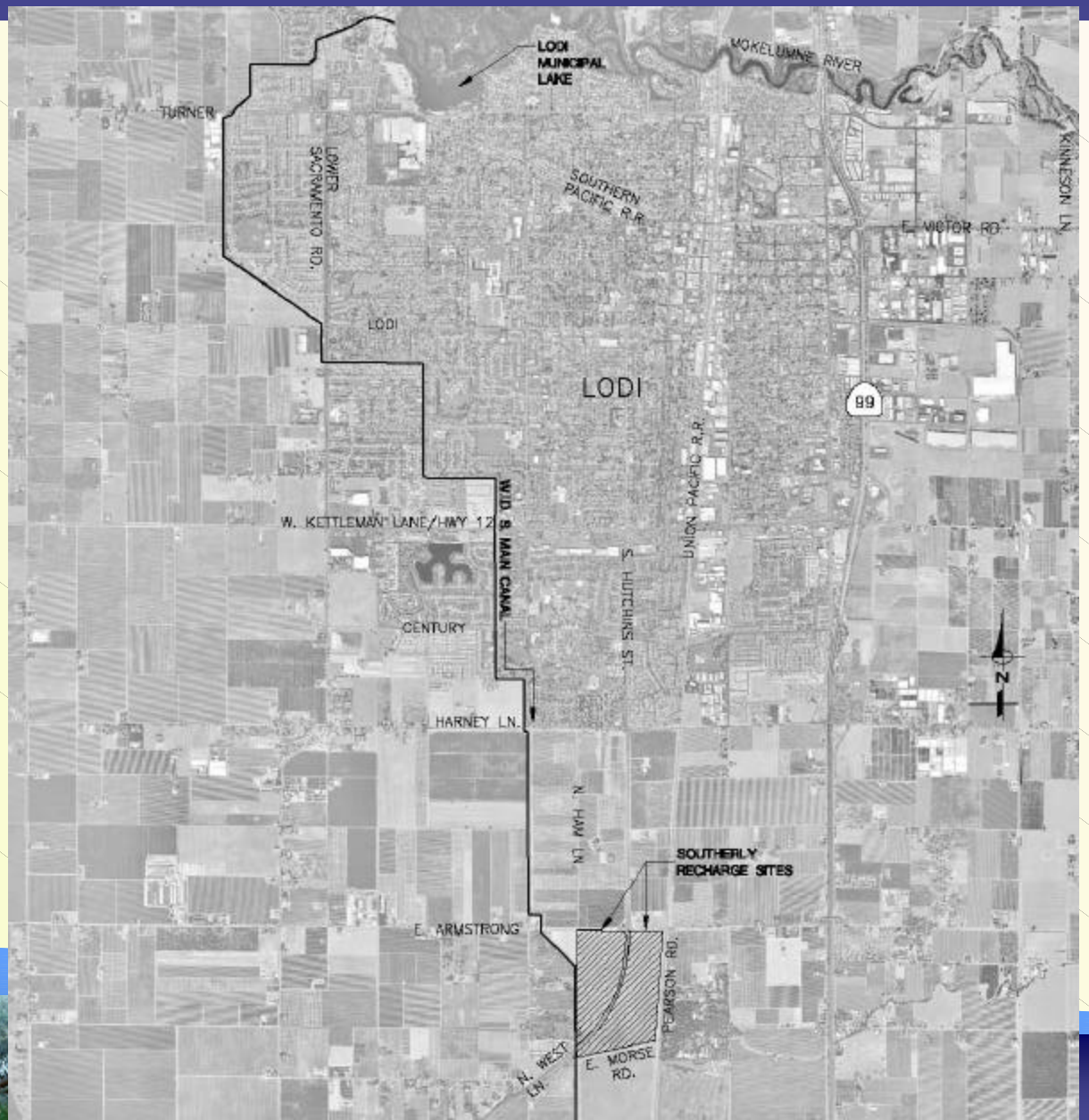

Treatment and Direct Use

- Facilities – diversion structure, treatment plant, distribution system improvements
- Unit Cost – in range of $360/af to $420/af (Including $80/af offset for groundwater pumping)
- Could result in variable supply quality to the City's customers (seasonally and geographically)
- Disinfection with chlorine required
- Provides a very high quality supply
- Multiple sources enhance supply reliability
- Longer implementation time

Potential Locations - Water Treatment Alternative

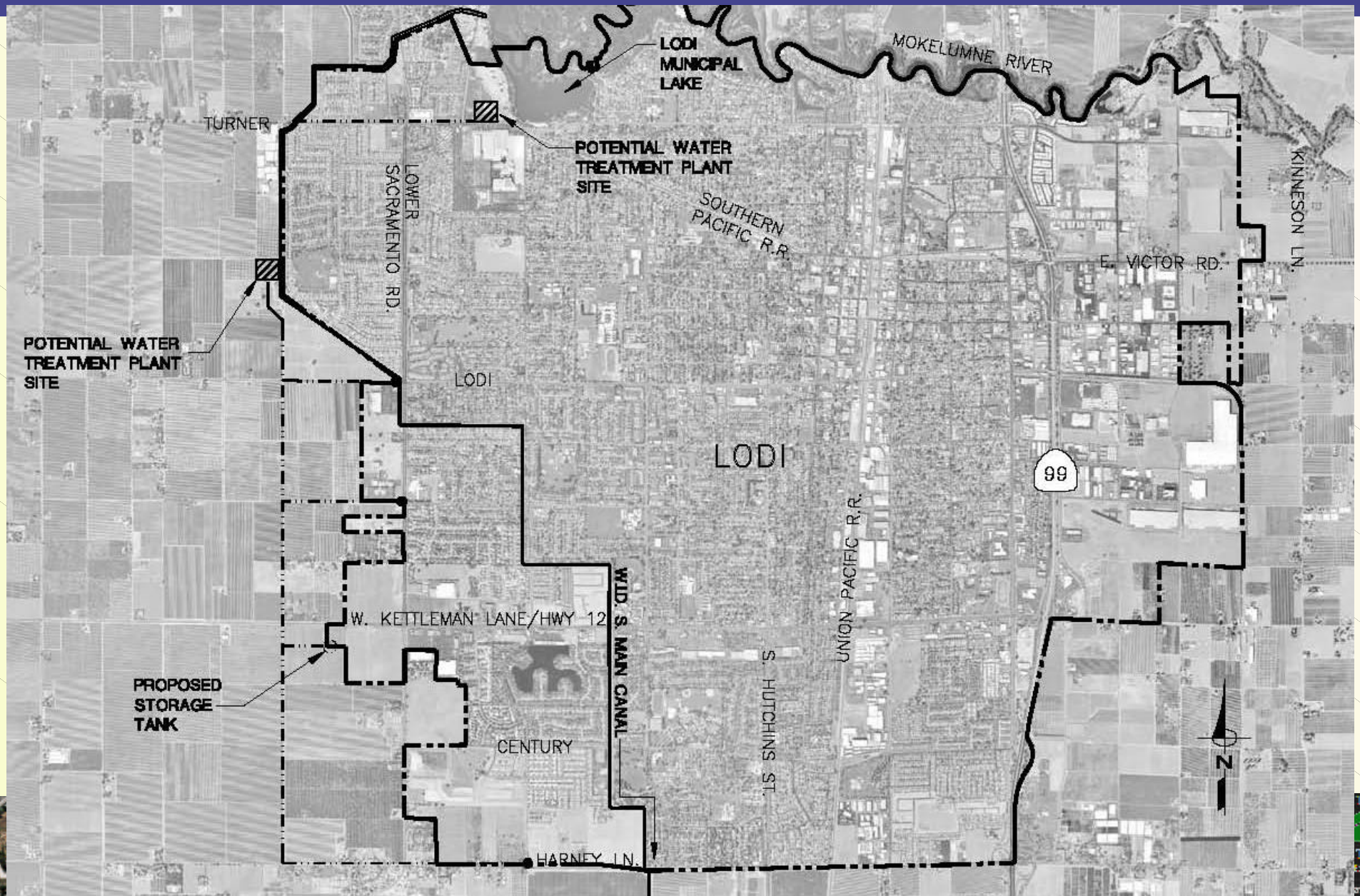

Recommended Solution to Supply Needs

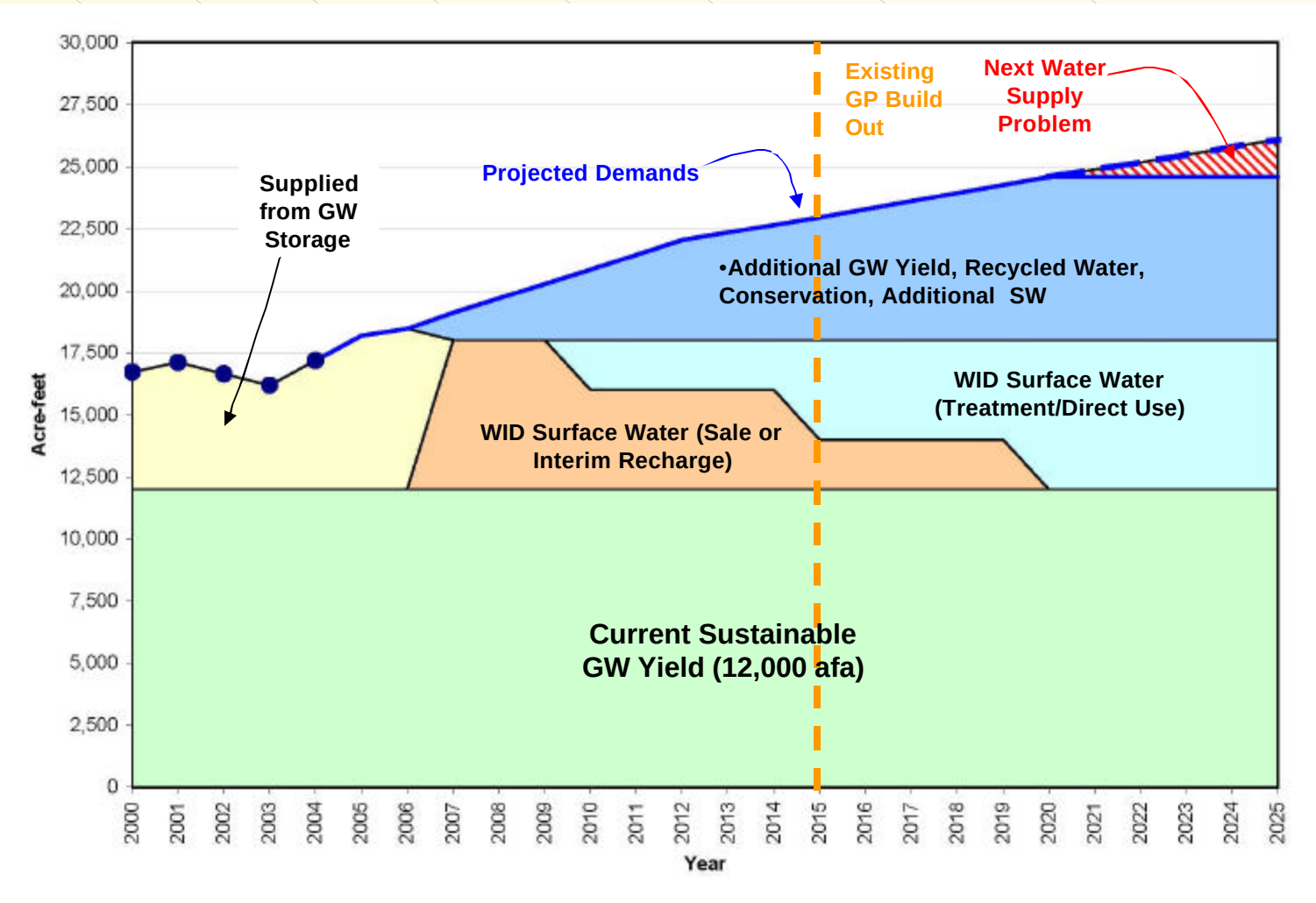

Surface Water Action Plan

Implementation Timeline

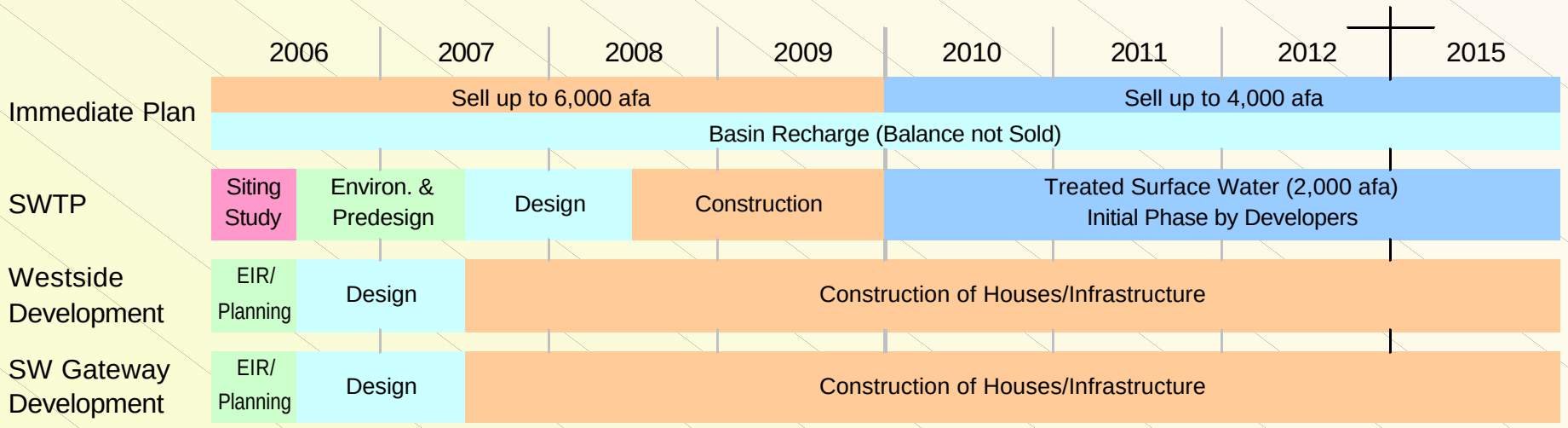

Discussion