AGENDA ITEM K-4

CITY OF LODI
COUNCIL COMMUNICATION

TM

AGENDA TITLE: Adopt Resolution Approving City of Lodi's Sewer System Management Plan (SSMP) and Approving Staffing Additions

MEETING DATE: September 2, 2009

PREPARED BY: Public Works Director

RECOMMENDED ACTION: Adopt a resolution approving the City of Lodi's Sewer System Management Plan and approving staffing additions.

BACKGROUND INFORMATION: The State Water Resources Control Board adopted on May 2,2006, the Statewide General Waste Discharge Requirements (GWDR) as required by Order No. 2006-0003. The Order requires that all public collection systems composed of more than one mile of pipeline be regulated. The purpose of the Order is to protect the State's water from wastewater discharges associated with periodic collection system failures. The Order requires that each operator of a publicly-owned collection system develop and implement a system-specific Sewer System Management Plan (SSMP). The purpose of the plan is to assure proper funding and management of sanitary sewer systems statewide. Compliance with the Order is also a provision of the City's Waste Discharge Permit for the White Slough Water Pollution Control Facility, adopted in September 2007. Resolution No. 2007-217 was adopted by the City Council on November 7, 2007, approving the City's SSMP work plan and schedule.

The 11 required elements of the SSMP and the status of each are presented below:

1. **Collection System Management Goals:** The goals of the plan are identified and completed.
2. **Organization of Personnel:** The organization of staff is completed.
3. **Legal Authority for Permitting Flows to the System:** The legal authority for the City is established in the Lodi Municipal Code; however, some modifications to the code may be required to implement the City's plan.
4. **Operations and Maintenance Activities:** The operation and maintenance program has been implemented, although regular improvements are anticipated as part of the plan.
5. **Design and Performance Provisions:** The City's design and construction standards have been completed and will be reviewed and updated on an ongoing basis.
6. **Overflow Emergency Response Plan:** The City's Sanitary Sewer Overflow Response Plan has been completed and will be regularly reviewed as part of the plan.
7. **Fats, Oils and Grease Program:** The City's Fats, Oils, and Grease (FOG) program is in place but could be more comprehensive. Enhancements to the program will be made over time.
8. **System Capacity Assurance:** The City staff has completed a System Capacity and Assurance Plan. This plan identified current and future improvement needs within the collection system.
9. **System Monitoring and Measurement Plan:** The monitoring, measuring, and program modifications are identified but will require review and updating on an ongoing basis.
10. **Internal SSMP Audits:** The SSMP audits are based on assessments of the implementation and progress of the plan and, therefore, will be prepared after several months of operation of the plan.
11. **SSMP Public Communications Program:** This component has been identified as an area requiring improvement.

APPROVED: _____
Blair King, City Manager

The purpose of the Order is to assure that the City is adequately educating and informing the public about the wastewater collection system status and is performing proper operations and maintenance activities. Adoption of the SSMP is the final step in complying with the Order. Proper funding and management of the City's wastewater collection system will be an ongoing City requirement to fully comply with the GWDR. The cost of compliance and the budget impact to the Wastewater Utility have been anticipated in the Wastewater Model.

In order to implement the SSMP and other requirements of the City's Waste Discharge Permit, staff has previously advised Council that staffing additions in the Wastewater Utility would be required. Council is requested to approve the addition of an Environmental Compliance Inspector, Plant and Equipment Mechanic, and Management Analyst.

The Environmental Compliance Inspector will fill a crucial compliance monitoring role related to the monitoring of the SSMP and to reduce sanitary sewer overflows within the collection system. Estimated annual cost for this position is $105,000.

The Plant and Equipment Mechanic will be dedicated to service at White Slough Water Pollution Control Facility and is required to service and repair the new equipment added during the recently-completed expansions to the plant. The estimated annual cost for this position is $95,000.

A new Management Analyst position will service both the Water and Wastewater Utilities. The duties of the position include monitoring and maintaining the financial models, tracking the budget performance of the utilities, and implementing a public outreach program for the water, wastewater and solid waste utilities. The estimated cost for this position is $90,000 and would be shared by the water and wastewater utility.

The wastewater and water rate models include the costs for these added positions. The costs will be incorporated into this year's budget at the mid-year budget adjustment.

A copy of the Sewer System Management Plan Report is on file at the Public Works Department, and a copy was previously provided to the City Council.

FISCAL IMPACT: The SSMP, as implemented over time, will continually identify operational and capital needs to minimize sanitary sewer overflows. It is anticipated that these needs and costs will be addressed in future budgets.

FUNDING AVAILABLE: Added staffing costs to be incorporated via mid-year budget adjustment.

Jordan Ayers
Deputy City Manager/Internal Services Director

F. Wally Sandelin
Public Works Director

Prepared by Kevin Gaither, Water Services Technician
FWS/CS/KG/dsg
cc: Charles E. Swimley, Water Services Manager

RESOLUTION NO. 2009-125

A RESOLUTION OF THE LODI CITY COUNCIL ADOPTING THE CITY'S SEWER SYSTEM MANAGEMENT PLAN AND APPROVING STAFF ADDITIONS

==========

WHEREAS, the State Water Resources Control Board adopted the Statewide General Waste Discharge Requirements (Order No. 2006-0003) on May 2, 2006. The Order requires that all public collection systems comprised of more than one mile of pipeline be regulated; and

WHEREAS, the Order requires that each operator of a publicly-owned collection system develop and implement a system-specific Sewer System Management Plan. The purpose of the plan is to assure proper funding and management of sanitary sewer systems statewide. Compliance with the Order is also a provision of the City's Waste Discharge Permit for the White Slough Water Pollution Control Facility, adopted in September of 2007. Resolution No. 2007-217 was adopted by the City Council on November 7, 2007, approving the work plan and schedule for the City's Sewer System Management Plan; and

WHEREAS, adoption of the Sewer System Management Plan is the final step in complying with the Order; and

WHEREAS, in order to implement the Sewer System Management Plan and other requirements of the City's Waste Discharge Permit, staffing additions will be required.

NOW, THEREFORE, BE IT RESOLVED that the Lodi City Council does hereby adopt the City of Lodi's Sewer System Management Plan; and

BE IT FURTHER RESOLVED that the City Council does hereby approve the addition of an Environmental Compliance Inspector and Plant and Equipment Mechanic.

Dated: September 2, 2009

==========

I hereby certify that Resolution No. 2009-125 was passed and adopted by the City Council of the City of Lodi in a regular meeting held September 2, 2009, by the following vote:

AYES: COUNCIL MEMBERS – Hitchcock, Katzakian, and Mayor Hansen

NOES: COUNCIL MEMBERS – None

ABSENT: COUNCIL MEMBERS – Johnson and Mounce

ABSTAIN: COUNCIL MEMBERS – None

RANDI JOHL
City Clerk

The City of Lodi

Public Works

Water Services

Sanitary Sewer Management Plan (SSMP)

September 2, 2009

Presentation Overview

- WDR - Order 2006-003
- What is a SSMP?
- Lodi's wastewater collection system and its maintenance
- Sanitary Sewer Overflows (SSO's)
- Lodi's response to the WDR
- Proposed staffing additions

WDR Order 2006-003

- Enhance protection for public health and recreational waters
- More rigorous and consistent sanitary sewer overflow reporting
- Sanitary Sewer Management Plan (SSMP)
- Inform, educate and communicate

What is a Sanitary Sewer Management Plan

"SSMP"

SSMP Objectives

- Minimize Number of SSO’s
- Compliance with Reporting Objectives
- Public Transparency

Elements of SSMP

1. Collection System Management Goals
2. Organization of Personnel
3. Legal Authority for Permitting Flows to the System
4. Operations and Maintenance Activities
5. Design and Performance Provisions
6. Overflow Emergency Response Plan
7. Fats, Oils and Grease Program
8. System Capacity Assurance
9. System Monitoring and Measurement Plan
10. Internal SSMP Audits
11. Public Communications Program

Lodi’s Wastewater Collection System

Maintenance

Wastewater Collection System

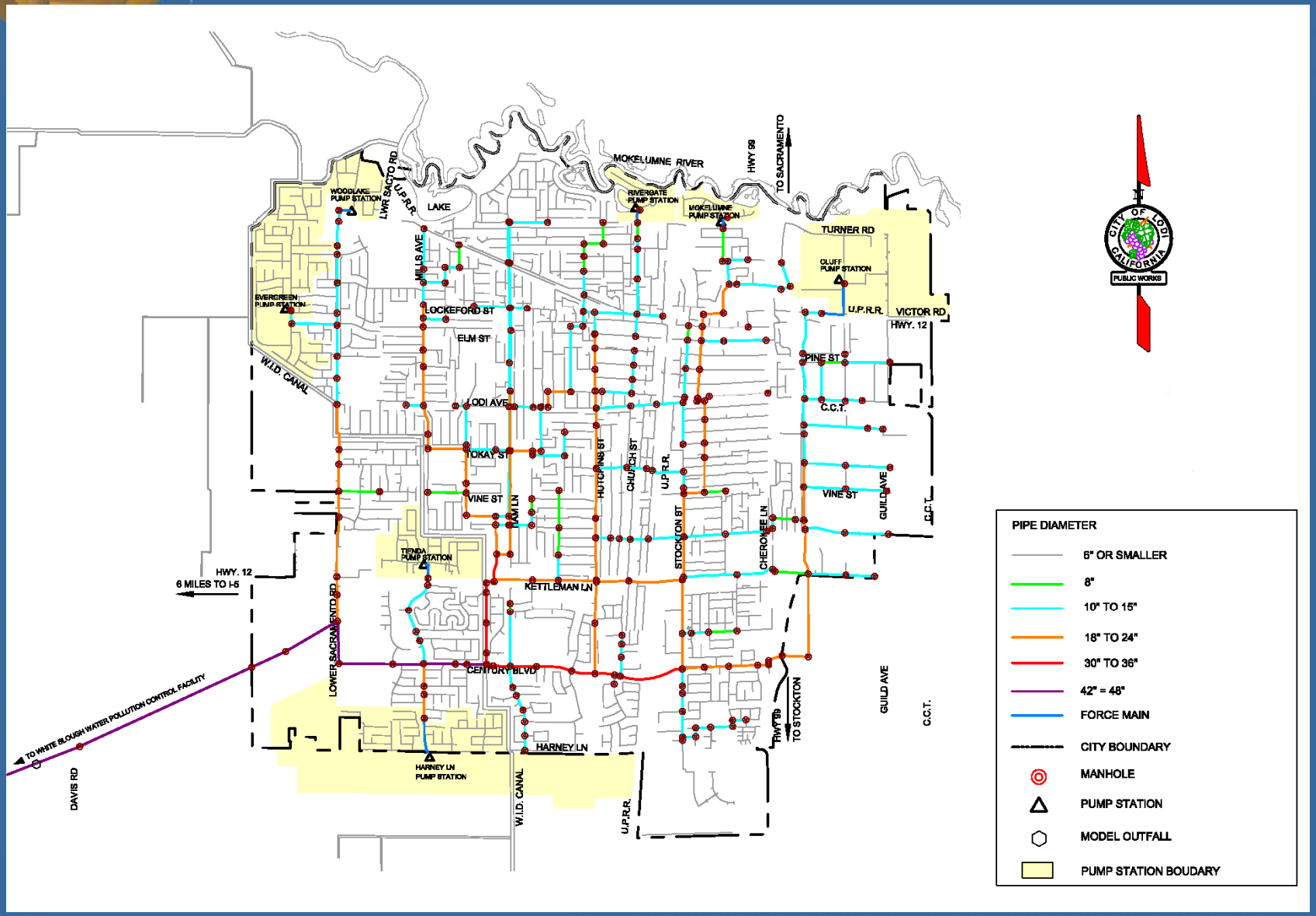

Final Destination…

Maintenance Crews At Work

Before and After

Sanitary Sewer Overflow

“SSO”

What is an SSO?

- Sanitary Sewer Overflow (SSO) – “Any overflow, spill, release, discharge or diversion of untreated or partially treated wastewater from a sanitary sewer system.”

  -- WDR 2006-003

Examples of SSO's

SSO Categories

- Category 1
  - Exceed 1,000 gallons or,
  - Reach a drainage channel and/or surface water or,
  - Discharge to a storm drainpipe that was not fully captured and returned to the sanitary sewer system
- Category 2
  - All other City sewer discharges
- Private
  - Discharges caused by blockages in private laterals

Lodi’s Response to the WDR

Lodi's Response to the WDR

- Online reporting
- Plug and spill tracking using GIS
- Sanitary Sewer Management Plan (SSMP)
- Modified operations
- Propose staffing additions

Proposed Staffing Additions

- Environmental Compliance Inspector
  - Enhance FOG program
  - Support additional monitoring requirements
  - Augment City's pretreatment program
- Plant Equipment Mechanic (White Slough)
  - Service and repair facility upgrades
- Analyst
  - Monitor and maintain financial models
  - Track budget performance
  - Oversee public outreach program

Questions?

Washington Street Pipe Profile

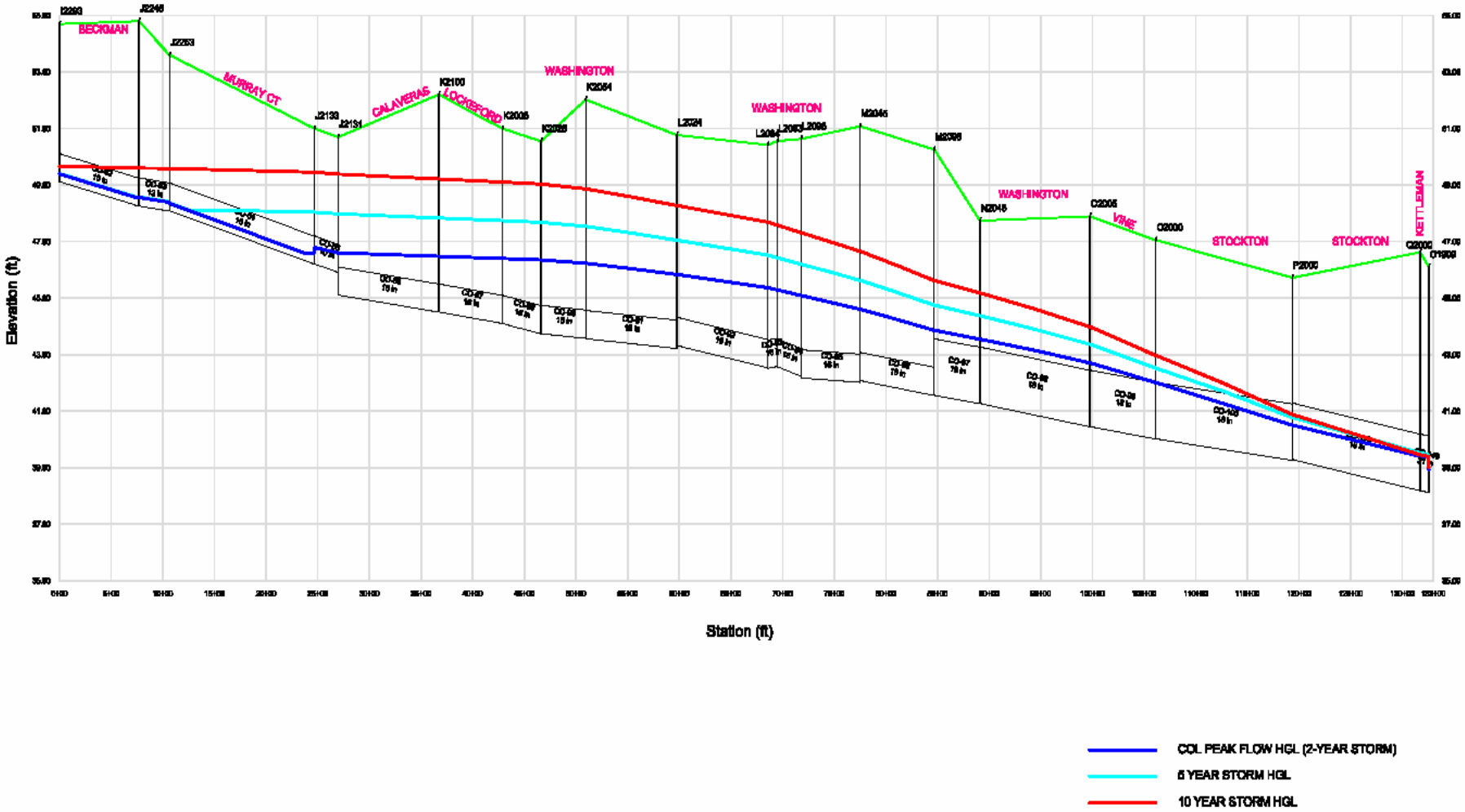

SEWER SYSTEM MANAGEMENT PLAN

Prepared for
City of Lodi, California

Holrnes International

AUGUST 2009

Revision Date: *0811312009*

DRAFT

SEWER SYSTEM MANAGEMENT PLAN

Prepared for

City of Lodi, California

By

Holmes International

In accordance with the contract

Between City of Lodi and Holmes International

Dated September 26, 2007

TABLE OF CONTENTS

LIST OF FIGURES ..... **VII**

LIST OF TABLES ..... **VII**

LIST OF ACRONYMS ..... **VIII**

LIST OF TERMS ..... **X**

BACKGROUND AND INTRODUCTION **B-1**

A. Background B-1

B. What is a Sewer System Management Plan (SSMP)? B-3

C. What are the SSMP Requirements? B-3

D. What is the City Required to Do? B-4

GOALS **1-1**

A. WDR/SSMP Goal Requirement 1-1

B. City of Lodi Goals 1-1

C. Appendix A – Development Plan and Schedule 1-1

ORGANIZATION **2-1**

A. WDR/SSMP Organization Requirement 2-1

B. SSMP Responsibility Organization Chart 2-1

C. Chain of Communication for Reporting SSOs 2-4

D. Appendix B – Organization Documents 2-5

LEGAL AUTHORITY **3-1**

A. WDR/SSMP Legal Authority Requirement 3-1

B. Industrial Pretreatment Program 3-1

C. Municipal Code and Design and Construction Standards 3-2

D. Municipal Code – Sewer Access Authority 3-2

E. Municipal Code – FOG 3-3

F. Municipal Code – Enforcement Authority 3-3

G. Inter-Agency Agreements and Satellite Systems 3-4

H. Appendix C – Legal Authority Documents 3-4

OPERATION AND MAINTENANCE ACTIVITIES 4-1

A. WDR/SSMP Operation and Maintenance Program Requirement 4-1

B. Lodi Collection System Maps 4-2

C. Lodi Preventive Operations & Maintenance Activities 4-2

D. Lodi Rehabilitation and Replacement Plan 4-7

E. Lodi Training Plan 4-8

F. Equipment and Critical Replacement Parts 4-9

G. Appendix D – Operation and Maintenance Program Documents 4-9

DESIGN AND PERFORMANCE PROVISIONS 5-1

A. WDR/SSMP - Design and Performance Provisions Requirement 5-1

B. Sanitary Sewer Design and Specifications 5-1

C. Sanitary Sewer Construction and Performance Provisions 5-2

D. Appendix E – Design and Performance Provision Documents 5-2

OVERFLOW EMERGENCY RESPONSE PLAN 6-1

A. WDR/SSMP Overflow Emergency Response Plan Requirement 6-1

B. Notification Procedures 6-2

C. Response Program 6-2

D. Regulatory Notification Procedure 6-4

E. Staff and Contractors Training 6-4

F. Emergency Response Coordination 6-4

G. Spill Mitigation and Containment Procedure 6-4

H. Appendix F - Overflow Emergency Response Plan Documents 6-4

FOG CONTROL PROGRAM 7-1

A. WDWSSMP – FOG Control Program Requirement 7-1

B. Public Education Plan 7-2

C. FOG Disposal Plan 7-2

D. Record Keeping Requirements 7-2

E. Legal Authority to Prohibit SSOs and Blockages Caused by FOG Discharges 7-3

F. BMP, Grease Removal Devices, Recordkeeping, and Reporting Requirements 7-3

G. Inspection and Enforcement Authority – FOG Producers 7-4

H. FOG Characterization Assessment and Hot Spot Cleaning Schedule 7-4

I. FOG Control Program Measures 7-4

J. Appendix G – FOG Control Program Documents 7-5

SYSTEM EVALUATION, CAPACITY, AND ASSURANCE PLAN 8-1

A. WDWSSMP - System Evaluation and Capacity Assurance Plan Requirement 8-1

B. Evaluation Process – Capacity Enhancement Projects 8-1

C. Design Criteria 8-2

D. Capacity Enhancement Measurers 8-2

E. Capital Improvement Program Schedule 8-2

F. Appendix H - System Evaluation and Capacity Assurance Plan Documents 8-2

MONITORING, MEASUREMENT, AND PROGRAM MODIFICATION 9-1

A. WDWSSMP – Monitoring, Measurement, and Program Modification Requirement 9-1

B. Utility Metrics to Prioritize SSMP Activities 9-1

C. Metrics to Monitor Effectiveness of SSMP 9-2

D. Metrics to Assess Preventative Maintenance Program 9-2

E. SSMP Performance Monitoring and Update Process 9-2

F. SSO Trends – Frequency, Location and Volume 9-3

G. Appendix I - Monitoring, Measurement, and Program Modifications Documents 9-4

PROGRAM AUDIT AND ANNUAL REPORT 10-1

A. WDR/SSMP - SSMP Program Audits Requirement 10-1

B. Audit Procedures, Roles and Responsibilities 10-1

C. SSMP Program Modification/Update Process 10-3

D. Appendix J - SSMP Program Audit Documents 10-3

COMMUNICATION PROGRAM 11-1

A. WDR/SSMP - Communication Program Requirement 11-1

B. Internal Communication – Staff, Utility Commission, and City Council etc. 11-1

C. Stakeholder Communication – Residential, Commercial and Industrial 11-2

D. Appendix K - Communication Program Documents 11-2

LIMITATIONS ..... L-I

APPENDIX A ..... A

APPENDIX B ..... B

APPENDIX C C

APPENDIX D ..... D

APPENDIX E ..... E

APPENDIX F ..... F

APPENDIX G ..... G

APPENDIX H ..... H

APPENDIX I ..... **I**

APPENDIX J ..... **J**

APPENDIX K ..... **K**

LIST OF FIGURES

Figure B-1. Lodi Vicinity Map B-2

Figure B-2. SSMP Responsibility Organization Chart..... 2-2

Figure B -3. SSO Plan Flow Chart 6-3

LIST OF TABLES

Table B-1. Sewer System Management Plan (SSMP) Requirements..... …..B-3

Table B-2. Sewer System Management Plan Time Schedule.. ..... …..B-7

LIST OF ACRONYMS

AB	Assembly Bill
BAT	Best Available Technology
BMP	Best Management Practice
CASA	California Association of Sanitation Agencies
CCTV	Closed-Circuit Television
CFR	Code of Federal Regulations
CIP	Capital Improvement Plan or Capital Improvement Program and Capital Improvement Project
City	City of Lodi
CM	Corrective Maintenance
CMMS	Computerized Maintenance Management System
CDFG	California Department of Fish and Game
CWEA	California Water Environment Association
CVCWA	Central Valley Clean Water Association
EPA	Environmental protection Agency
ERP	Emergency Response Plan
EUD	Eiivironmental Utilities Department
FOG	Fats, Oils, and Grease
FSE	Food Service Establishments
GIS	Geographical Information System
GPS	Global Positioning System
GWI	Groundwater Induced Infiltration
GWDR	General Waste Discharge Requirements and/or Waste Discharge Requirements (WDR)
I/I	Inflow / Infiltration
ICS	Incident Command System
IERP	Integrated Emergency Response Plan
IWD	Industrial Waste Division
LRO	Legally Responsible Official
MGD	million gallons per day

MRP	Monitoring and Reporting Program
MSC	Municipal Service Center
MSDS	Material Safety Data Sheets
NPDES	National Pollution Discharge Elimination System
NRC	National Research Council
O&M	Operation and Maintenance
OERP	Overflow Emergency Response Plan
OES	Office of Emergency Services
Order	SWRCB Order No. 2006-0003-DWQ adopted May 2,2006
PdM	Predictive Maintenance
PM	Preventative Maintenance
PMP	Preventative Maintenance Program
POTWs	Publicly Owned Treatment Works
R&R	Rehabilitation and Replacement
RD/II	Rainfall Dependent Infiltration and Inflow
RWQCB	Regional Water Quality Control Board
SCAP	Southern California Alliance of Publicly Owned Treatment Works
SIUs	Significant Industrial Users
SOP	Standard Operating Procedure or Standard Maintenance Procedure
SPWA	South Placer Wastewater Authority
SSMP	Sewer System Management Plan
SSO	Sanitary Sewer Overflow
SWRCB	State Water Resources Control Board
TOC	Table of Contents
TTC	Trenchless Technology Center
USA	Underground Service Alert
WDP	Waste Discharge Permit
WDR	Waste Discharge Requirements and/or General Waste Discharge Requirements (GWDR)
WW	Wastewater
WWCS	Wastewater Collection
WWTP	Wastewater Treatment Plant

LIST OF TERMS

Authorized Representative – The person designated, for a municipality, state, federal or other public agency, as either a principal executive officer of ranking elected official, or a duly authorized representative of that person.

Blockage – Something that partially or fully blocks the wastewater from flowing through a sewer pipeline. The blockage can be caused by debris in the sewer, grease buildup, root intrusion, or a partial or full collapse of the pipeline. If not caught in time, the blockage may cause an overflow. This is also called a stoppage.

California Association of Sanitation Agencies (CASA) - CASA is a non-profit, statewide trade association representing public agencies that provide wastewater collection, treatment, disposal, and/or water reclamation services to about 90 percent of the sewered population in California.
Website: http://www.casaweb.org/

California Water Environment Association (CWEA) – CWEA is an association of 8,000-plus professionals in the wastewater industry. CWEA is committed to keeping California's water clean. CWEA trains and certifies wastewater professionals, disseminates technical information, and promotes sound policies to benefit society through protection and enhancement of the water environment. CWEA offers services at the state level and locally through 17 geographical local sections. Through their on-line bookstore, CWEA offers technical references for sewer system operation and maintenance.
Website: http://www.cwea.org/ .

Central Valley Clean Water Association (CVCWA) – CVCWA is an association comprised of over 50 wastewater treatment and collection system agencies. CVCWA's mission is to effectively represent the interests of public wastewater agencies in the Central Valley in regulatory matters and to support the exchange of information so members can best meet their business challenges.
Website: http://www.cvcwa.org/ .

Central Valley Regional Water Quality Control Board – Also known as Regional Water Board or RWQCB. The mission of this state regulatory agency is to: preserve, enhance and restore the quality of California's water resources, and ensure their proper allocation and efficient use for the benefit of present and future generations. Website: http://www.waterboards.ca.gov/centralvalley/ .

Dynamic Model – Computer hydraulic model simulation which solves the complete dynamic flow routing equations (St. Venant's equations) for accurate simulation of backwater, looped connections, surcharging, and pressure flow in a collection system.

Enrollee – The legal public entity that owns a sanitary sewer system, as defined by the GWDR, which has submitted a complete and approved application for coverage under the GWDR. This is also called a sewer system agency or wastewater collection system agency.

Fats, Oils and Grease (FOG) -Fats, oils, and grease that are discharged into the sanitary sewer collection system by Food Service Establishments (FSE), homes, apartments and other sources. FOG is a major cause of blockages leading to increased maintenance and sometimes SSO's.

FOG Control Program – To be implemented at the Enrollee's discretion. May include public education program; plan and schedule for the disposal of FOG; legal authority to prohibit FOG related discharges; requirement to install grease removal devices; authority to inspect grease producing facilities;

identification of sanitary sewer system sections subject to FOG blockages and the establishment of a cleaning schedule for each section; development and implementation of source control measures for all sources of FOG.

Geographical lnformation System (GIS) – **A** database linked with mapping, which includes various layers of information used by government officials. Examples of information found on a GIS can include a sewer map; sewer features such as pipe location, diameter, material, condition, last date cleaned or repaired. The GIS also typically contains base information such as streets and parcels.

Governing Board – This is the governing board of the sewer entity developing the SSMP. Examples would be the Board of Directors, the City Council, or the County Board of Supervisors.

GWDR – General Waste Discharge Requirements – **A** GWDR is an authorization to discharge waste with certain conditions, which can be issued on an individual basis or to a group of dischargers. The Statewide General WDR for Sanitary Sewer Systems was adopted by the SWCRB and will be implemented by the Regional Water Boards and SWRCB.

Groundwater Induced Infiltration (GWI) – Infiltration attributed to groundwater entering the sewer system.

Infiltration – The seepage of groundwater into a sewer system, including service connections. Seepage frequently occurs through defective or cracked pipes, pipe joints, connections or manhole walls and joints.

Inflow – Water discharged into a sewer system and service connections from such sources as, but not limited to, roof leaders, cellars, yard and area drains, foundation drains, cooling water discharges, drains from springs and swampy areas, around manhole covers or through holes in the covers, cross connections from storm and combined sewer system, catch basins, storm waters, surface runoff, street wash waters or drainage. Inflow differs from infiltration in that it is a direct discharge into the sewer rather than a leak into the sewer itself.

Lateral – The poi-tion of sewer that connects a home or business with the main line in the street. Sometimes sewer system agencies own or maintain a portion of the lateral.

> *Upper Lateral:* Portion of lateral from building to property line (or easement line), usually privately owned and maintained.
>
> *Lower Lateral:* Portion of lateral from property line (or easement line) to sewer mainline in the street or easement. This portion of the lateral is sometimes privately owned and maintained and sometimes publicly owned and maintained.

Monitoring and Reporting Program - The Monitoring and Reporting Program established in the WDR that establishes monitoring, record keeping, reporting and public notification requirements for the GWDR.

Overflow Emergency Response Plan – Identifies measures to protect public health and the environment. **A** plan must include the following: notification procedure, appropriate response plan, regulatory notification procedures, employee training plan, procedures to address emergency operations, a program that ensures all reasonable steps are taken to contain and prevent discharges.

Private Lateral: That portion of the Lateral that is owned and maintained by the private property owner that it serves. Based on an individual agency's ordinance, this may just be the Upper Lateral or can include the Lower Lateral.

Preventative maintenance (PM) – Regularly scheduled servicing of machinery, infrastructure or other equipment using appropriate tools, tests, and lubricants. This type of maintenance can prolong the useful life of equipment, infrastructure, and machinery and increase its efficiency by detecting and correcting problems before they cause a breakdown of the equipment, or failure of the infrastructure.

R-Value – Is the amount of rainfall that reaches the collection system via infiltration and inflow. This value is typically expressed as a percentage of total rainfall volume that reaches the collection system.

Rainfall Dependent Infiltration and Inflow – Infiltration and Inflow that is attributed directly to rainfall.

Regional Water Board – Is a short name for any of the nine regional boards including the San Francisco Bay Area Regional Water Quality Control Board and the Central Valley Regional Water Quality Control Board.

Rehabilitation and Replacement Plan (also referred to as a Capital Improvement Plan) – Identifies and prioritizes system deficiencies and implements short-term and long-term rehabilitation actions to address each deficiency.

Sanitary Sewer Overflow (SSO) – The Statewide GWDR defines an SSO as any overflow, spill, release, discharge or diversion of untreated or partially treated wastewater from a sanitary sewer system, including overflows or releases that reach waters of the United States, overflows or releases that *do not* reach water of the United States, and backups into buildings and/or private property caused by conditions within the publicly owned portion of the sewer system.

Sanitary Sewer Overflow Categories

- Category 1 – All discharges of sewage resulting from a failure in the Enrollee's sanitary sewer system that equals or exceeds 1000 gallons; or result in a discharge to a drainage channel and/or surface water; or discharge to a storm drainpipe that was not fully captured and returned to the sanitary sewer system.
- Category 2 – **All** other discharges of sewage resulting from a failure in the Enrollee's sanitary sewer system
- Private Lateral Sewage Discharges – Sewage discharges that are caused by blockages or other problems within a privately owned lateral

Sanitary Sewer Systems – Any system of pipes, pump stations, sewer lines, or other conveyances, upstream of a wastewater treatment plant head works used to collect and convey wastewater to the publicly owned treatment facility. Temporary storage and conveyance facilities are considered to be part of the sanitary sewer system and discharges into these temporary storage facilities are not to be considered SSO's.

Satellite Collection System – The portion, if any, of a sanitary sewer system owned or operated by a different public agency than the agency that owns and operates the wastewater treatment facility to which the sanitary sewer system is tributary.

Sewer System Management Plan-SSMP – **A** series of written site specific programs that address how a collection system owner/operator conducts their daily business as is outlined in the WDR. Each SSMP is unique for an individual discharger. The plan includes provisions to provide proper and efficient management, operation, and maintenance of sanitary sewer systems, while taking into consideration risk management and cost benefit analysis. The plan must also contain a spill response plan. Certification is offered by technically qualified and experienced persons and provides a useful cost effective means for ensuring that SSMP's are developed and implemented appropriately.

Southern California Alliance of Publicly Owned Treatment Works - Is a non-profit organization comprised of Publicly Owned Treatment Works including wastewater treatment plants and public collection system owner/operators dedicated to assisting its member cities and agencies in achieving regulatory compliance. Website: http://scap1.org/

Stakeholder - A person or organization that has a vested interest in the development and outcome of the SWRCB Order No. 2006-0003 Statewide General Waste Discharge Requirements for Sanitary Sewer Systems.

State Water Resources Control Board: Also called the State Board. This is the State agency that developed and passed the GWDR for collection systems and the agency that maintains the **SSO** reporting web site.

Static Model – A computer hydraulic model that uses the Manning's Equation to determine hydraulic capacity of the gravity pipelines and either the Manning's or Hazen-Williams equations to determine the hydraulic capacity of the pressure pipeline system. The capacity is compared to the peak hydraulic flow in the system to determine potential deficiencies. The static model assumes the peak hydraulic flow occurs at all locations within the collection system at the same time.

Stoppage – Something that partially or fully blocks the wastewater from flowing through a sewer pipeline. **A** stoppage can be caused by debris in the sewer, grease buildup, root intrusion, or a pai-tial or full collapse of the pipeline. If not caught in time, a stoppage may cause an overflow. This is also called a blockage.

System Evaluation and Capacity Assurance Plan – A required component of an agency's SSMP and is an important part of any agency's overall Capital Improvement Plan that provides hydraulic capacity of key sanitary sewer system elements for dry weather peak flow conditions, as well as the appropriate design storm or wet weather event.

Wastewater Collection System: See Sanitary Sewer System.

BACKGROUND AND INTRODUCTION

A. Background

The City of Lodi (City) operates under the council-manager form of municipal government. The City Council is the elected governing board of the City. Members are elected "at-large" through regular elections. The city, a municipal corporation, consists of all the territory within the boundaries thereof, and all territory outside the boundaries thereof over which it has jurisdiction or control by virtue of any constitutional or statutory provision. The City Council is responsible for approving budgets and setting policy. The City Manager has the responsibility of management of all City Departments and all hiring of personnel, and conducts the upper level management and business of the City.

The City Attorney receives policy direction from the City Council and acts as legal advisor and counsel to the City Council., City Manager, and City Departments. The City Attorney also represents the City in litigation against the City.

The Public Works Director is responsible to plan, organize, direct, and review the activities and operations of the Public Works Department. This includes the following Divisions: Water Services, Engineering, Streets and Drainage, Fleet and Facilities Services, and Transportation. The Public Works Director is the Legally Responsible Official (LRO) in the WDR.

The Water Services Manager has overall responsibility for the management and oversight of the entire Water and Wastewater Utilities including the Sewer System Management Plan and monitoring and reporting plan. He oversees revenue and expenses, along with operation and maintenance of the White Slough Water Pollution Control Facility, the wastewater collection system, and the drinking water system for the City.

The Water Services Division hired Holmes International in February 2007, to perform a comprehensive audit of the wastewater collection system practices in terms of WDR compliance. This audit produced a SSMP development plan and implementation schedule. Following the audit, the SSMP was prepared.

Service Area and Relevant Statistics:

Figure B-1 illustrates the boundary of City of Lodi's geographical service area. Statistics provided in this SSMP are as of 2008 and subject to change over time. Statistics subject to change will be updated in the appendices and on the City's website (www.Lodi.ca.us).

CITY OF LODI

PUBLIC WORKS DEPARTMENT

SERVICE BOUNDARY
CITY OF LODI
WASTEWATER COLLECTION SYSTEM

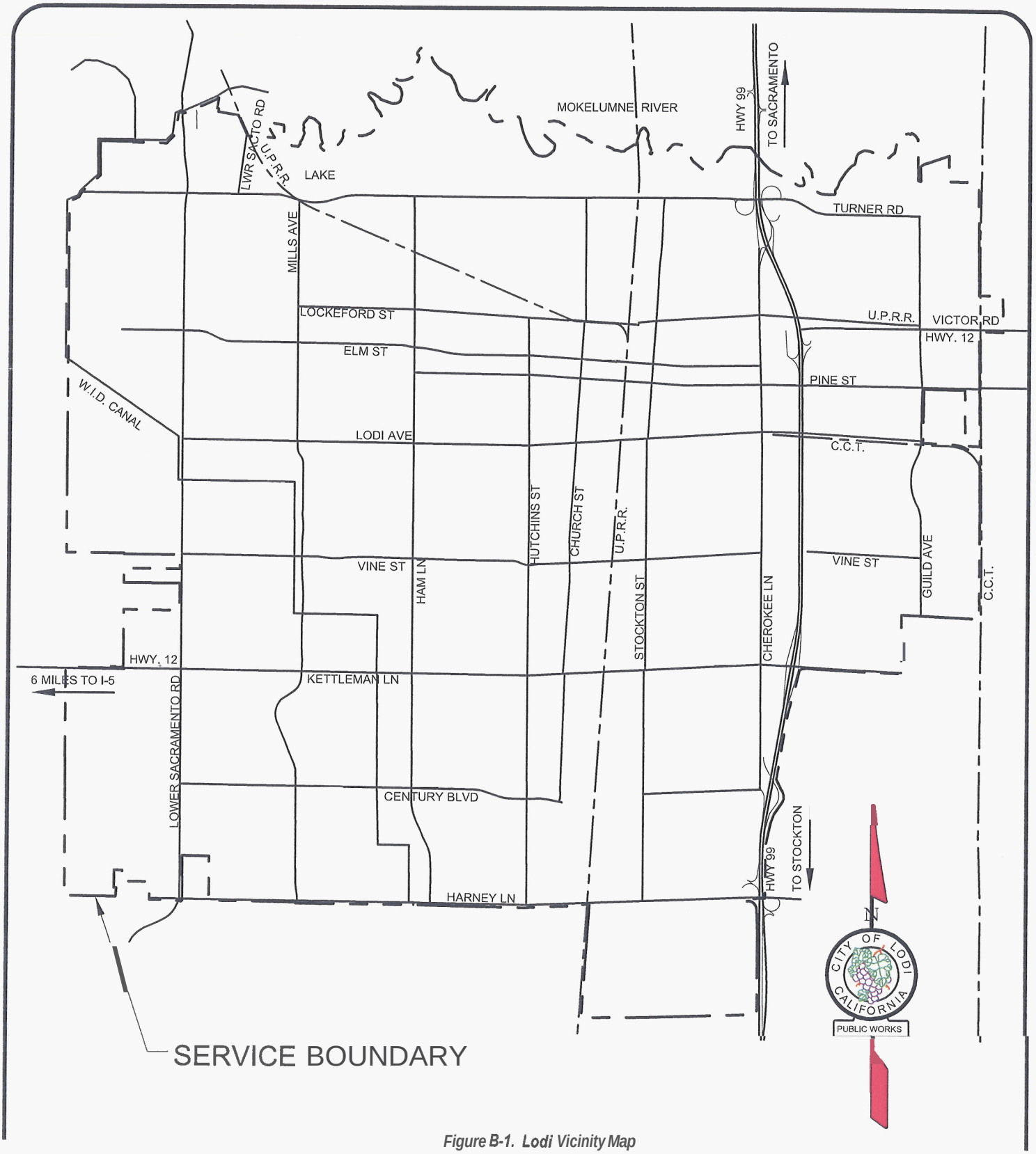

Figure B-1. Lodi Vicinity Map

Revision Date: 08/13/2009

DRAFT

The City of Lodi service area is approximately 12 square miles, has approximately 17,500 residential, 1,300 commercial and 55 industrial sewer connections and one Wastewater Treatment Plant.

The City provides service to a population of approximately 63,400 people. The wastewater collection and conveyance system consists of **188.5** miles sewer pipe ranging in size of 4" to 36" in diameter, about 3,200 manholes, and **9** neighborhood pumping or lift stations that convey an average dry weather flow of approximately 6.6 MGD. Sanitary sewerage is conveyed from the City's service area to White Slough Wastewater Treatment Plant.

B. What is a Sewer System Management Plan (SSMP)?

The California State Water Resources Control Board (SWRCB) adopted a Statewide General Waste Discharge Requirement (WDR) order No. 2006-0003 May 2,2006. This WDR dictates each publicly owned sanitary sewer system, termed Enrollee, develop, document, and implement a Sewer System Management Plan (SSMP) and make it available to the public and State and Regional Water Quality Control Boards (RWQCB) upon request. The following paragraphs briefly summarize the key elements of an SSMP and the implementation requirements for Enrollees.

SSMP's are state-mandated requirements for California public collection system agencies that own or operate sanitary sewer systems greater than one **(1)** mile in length. The goal for these plans is to reduce sanitary sewer overflows (SSO's), protect public health and environment and improve the overall maintenance and management of sewer systems including neighborhood lift stations.

C. What are the SSMP Requirements?

Table B-1 identifies each required SSMP element and indicates what criterion must be addressed to achieve compliance with each respective/corresponding element.

Table B-1. Sewer System Management Plan (SSMP) Requirements

SSMP Elements	Criteria
Goals	• Properly manage, operate and maintain all parts of the collection system • Provide capacity to convey base and peak flows • Minimize the frequency and severity of sanitary sewer overflows (SSO's) • Mitigate the impact of SSO's
Organization	• Identify agency staff responsible for the SSMP • Identify chain of communication for responding to and reporting SSO's
Legal Authority	• Control infiltration and inflow (I/I) from the collection system and laterals • Require proper design and construction of sewers and connections

Table B-1. Sewer System Management Plan (SSMP) Requirements	
***SSMP* Elements**	**Criteria**
	• Require proper sewer installation, testing and inspection • Ability to impose source control requirements
Operation and Maintenance Program	• Maintain up-to-date maps • Allocate adequate resources for system operation and maintenance • Prioritize preventative maintenance activities • Identify structural equipment to minimize equipment/facility downtime • Provide staff training on a regular basis
Design and Construction Standards	• Identify minimum design and construction standards and specifications • Identify procedures and standards for inspecting and testing
Overflow Emergency Response Plan	• Provide **SSO** notification procedures • Develop and implement a plan to respond to **SSO's** • Develop procedures to report and notify **SSO's** • Develop procedures to prevent overflows from reaching surface waters, and to minimize or correct any adverse impact from **SSO's**
Fats, Oil and Grease (FOG) Control Program	• Develop a Fats, Oil and Grease (FOG) control plan, if needed
System Evaluation and Capacity Assurance	• Establish a process to access the current and future capacity requirements • Implement a capital improvement plan to provide hydraulic capacity
Monitoring, Measurement and Program Modifications	• Measure the effectiveness of each SSMP element • Monitor each SSMP element and make updates as necessary
***SSMP* Audits**	• Conduct audits every two years or more frequently that includes identifying deficiencies and steps to correct them
Communication Program	• Communicate with public (Customers) on SSMP development, implementation and performance and create a plan for communication with tributary/satellite sewer systems

D. What is the City Required to Do?

The WDR Provisions describes the requirements for compliance and consequences for non-compliance:

1. The Enrollee must comply with all conditions of the Order. Any noncompliance with this Order constitutes a violation of the California Water Code and is grounds for enforcement action.

2. It is the intent of the State Water Board that sanitary sewer systems be regulated in a manner consistent with the general WDR. Nothing in the general WDR shall be:

   a. Interpreted or applied in a manner inconsistent with the Federal Clean Water Act, or supersede a more specific or more stringent state or federal requirement in an existing permit, regulation, or administrative/judicial order or Consent Decree;

   b. Interpreted or applied to authorize an SSO that is illegal under either the Clean Water Act, an applicable Basin Plan prohibition or water quality standard, or the California Water Code;

   c. Interpreted or applied to prohibit a Regional Water Board from issuing an individual NPDES permit or WDR, superseding this general WDR, for a sanitary sewer system, authorized under the Clean Water Act or California Water Code; or

   d. Interpreted or applied to supersede any more specific or more stringent WDR's or enforcement order issued by a Regional Water Board.

The Enrollee shall take all feasible steps to eliminate SSO's. In the event that an SSO does occur, the Enrollee shall take all feasible steps to contain and mitigate the impacts of an SSO.

3. In the event of an SSO, the Enrollee shall take all feasible steps to prevent untreated or partially treated wastewater from discharging from storm drains into flood control channels or waters of the United States by blocking the storm drainage system and by removing the wastewater from the storm drains.

4. All SSO's must be reported in accordance with Section G of the general WDR.

5. In any enforcement action, the State and/or Regional Water Boards will consider the appropriate factors under the duly adopted State Water Board Enforcement Policy. And, consistent with the Enforcement Policy, the State and/or Regional Water Boards must consider the Enrollee's efforts to contain, control, and mitigate SSO's when considering the California Water Code Section 13327 factors. In assessing these factors, the State and/or Regional Water Boards will also consider whether:

   a. The Enrollee has complied with the requirements of this Order, including requirements for reporting and developing and implementing a SSMP;

   b. The Enrollee can identify the cause or likely cause of the discharge event;

   c. There were no feasible alternatives to the discharge, such as temporary storage or retention of untreated wastewater, reduction of inflow and infiltration, use of adequate backup equipment, collecting and hauling of untreated wastewater to a treatment facility, or an increase in the capacity of the system as necessary to contain the design storm event identified in the SSMP. It is inappropriate to consider the lack of feasible alternatives, if the Enrollee does not implement a periodic or continuing process to identify and correct problems.

d. The discharge was exceptional, unintentional, temporary, and caused by factors beyond the reasonable control of the Enrollee;

e. The discharge could have been prevented by the exercise of reasonable control described in a certified SSMP for:

- Proper management, operation and maintenance (O&M);
- Adequate treatment facilities, sanitary sewer system facilities, and/or components with an appropriate design capacity, to reasonably prevent SSO's (e.g., adequately enlarging treatment or collection facilities to accommodate growth, infiltration and inflow (I/I), etc.);
- Preventive maintenance (including cleaning and fats, oils, and grease (FOG) control);
- Installation of adequate backup equipment; and
- Inflow and Infiltration prevention and control to the extent practicable.

f. The sanitary sewer system design capacity is appropriate to reasonably prevent SSO's.

g. The Enrollee took all reasonable steps to stop and mitigate the impact of the discharge as soon as possible.

6. When a SSO occurs, the Enrollee shall take all feasible steps and necessary remedial actions to: 1) control or limit the volume of untreated or partially treated wastewater discharged, 2) terminate the discharge, and *3)* recover as much of the wastewater discharged as possible for proper disposal, including any wash down water.

   The Enrollee shall implement all remedial actions to the extent they may be applicable to the discharge and not inconsistent with an emergency response plan, including the following:

   a. Interception and rerouting of untreated or partially treated wastewater flows around the wastewater line failure;

   b. Vacuum truck recovery of SSO's and wash down water;

   c. Cleanup of debris at the overflow site;

   d. System modifications to prevent another SSO at the same location;

   e. Adequate sampling to determine the nature and impact of the release; and

   f. Adequate public notification to protect the public from exposure to the SSO.

7. The Enrollee shall properly, manage, operate, and maintain all parts of the sanitary sewer system owned or operated by the Enrollee, and shall ensure that the system operators (including employees, contractors, or other agents) are adequately trained and possess adequate knowledge, skills, and abilities.

8. The Enrollee shall allocate adequate resources for the operation, maintenance, and repair of its sanitary sewer system, by establishing a proper rate structure, accounting mechanisms, and auditing procedures to ensure an adequate measure of revenues and expenditures. These procedures must be in compliance with applicable laws and regulations and comply with generally acceptable accounting practices.

9. The Enrollee shall provide adequate capacity to convey base flows and peak flows, including flows related to wet weather events. Capacity shall meet or exceed the design criteria as defined in the Enrollee's System Evaluation and Capacity Assurance Plan for all parts of the sanitary sewer system owned or operated by the Enrollee.

10. The Enrollee shall develop and implement a written SSMP and make it available to the State and/or RWQCB upon request. **A** copy of this document must be publicly available at the Enrollee's office and/or available on the Internet. This SSMP must be approved by the Enrollee's governing board at a public meeting.

11. In accordance with the California Business and Professions Code sections 6735,7835, and 7835.1, all engineering and geologic evaluations and judgments shall be performed by or under the direction of registered professionals competent and proficient in the fields pertinent to the required activities. Specific elements of the SSMP that require professional evaluation and judgments shall be prepared by or under the direction of appropriately qualified professionals, and shall bear the professional(s)' signature and stamp.

12. The mandatory elements of the ***SSMP*** are specified below. However, if the Enrollee believes that any element of this section is not appropriate or applicable to the Enrollee's sanitary sewer system, the SSMP program does not need to address that element. The Enrollee must justify why that element is not applicable.

Note: The mandatory elements and associated WDR section and due dates in Table B-2 below are applicable to the City of Lodi.

Table 13-2. Sewer System Management Plan Time Schedule

Mandatory Elements	Due Date
Application for Permit Coverage (Complete)	Nov 2, 2006
Reporting Program (Continuous Ongoing Requirement)	Sep 2,2007
SSMP Development Plan and Schedule (Complete)	Nov 2,2006
Goals (Complete)	Nov 2, 2007
Organizational Structure (Complete)	Nov 2, 2007
Legal Authority	May 2, 2009
Operations and Maintenance Program	May 2, 2009
Overflow Emergency Response Program	May 2,2009
FOG Control Program	May 2,2009

Table B-2. Sewer System Management Plan Time Schedule

Mandatory Elements	Due Date
Design and Performance Provisions	Aug 2, 2009
System Evaluation and Capacity Assurance Plan	Aug 2, 2009
Monitoring, Measurement and Program Modifications	Aug 2,2009
Program Audits	Aug 2, 2009
Communication Program	Aug 2,2009
Final SSMP	Aug 2, 2009

The purpose of this SSMP is to describe the activities the City of Lodi Water Services Division uses to manage the City's' wastewater collection system to further eliminate preventable SSO's, minimize those SSO's that do occur and protect both public health and the environment.

The Plan Includes:

Established goals that align the management, operation and maintenance and capacity assurance activities in a manner that will focus staff efforts to achieve the intended purpose of this SSMP.

Comply with the SWRCB's General Waster Discharge Requirement (WDR) order No. 2006-0003 issued May 2,2006.

Describe how the City Water Services Division complies with each element of the SWRCB's WDR SSMP requirements addressing the following:

An introduction, that provides an overview of the City and its' wastewater utility's size, complexity and SSMP responsibility.

An organizational structure, identifying SSMP responsibilities, job classifications, contact information, and location of SSMP documents.

A narrative describing how the City Water Services Division complies with each requirement.

WDWSSMP requirements for each element,

Policies, procedures, and programs the City of Lodi has in place or will have in place to achieve compliance with the SWRCB WDWSSMP.

A living appendix for contact personnel, job descriptions, policies, procedures, and programs subject to change.

The City's internet websites addresses for support/associated SSMP documents. (Some documents will be placed on the City's intranet site for security reasons. All electronic documents will be made available to State and Regional water board staff upon request).

Water Services Division statistical records indicating that prior to the creation of this SSMP; it has had a reasonably low Sanitary Sewer Overflow **(SSO)** rate in comparison to other communities in California of similar size and complexity. The majority of these **SSO** have occurred from blockages in main lines. The

average volume spilled per SSO has been less than 1,000 gallons/event. Ail SSO's have been mitigated in a timely manner and have not negatively impacted public health or the environment.

SECTION 1 - GOALS

A. WDR/SSMP Goal Requirement

The goal of the SSMP is to provide a plan and schedule to properly manage, operate, and maintain all parts of the sanitary sewer system. This will help reduce and prevent **SSO's,** as well as mitigate any **SSO's** that do occur.

B. City of Lodi Goals

The City's Water Services Division has established six goals to guide the development, implementation and success of Lodi's *SSMP*. These goals are designed to facilitate and target the management, operation and maintenance of the sanitary sewer collection system in a manner that will sustain the infrastructure, protect public health and the environment, and achieve compliance with State Water Resources Control Board's General Waste Discharge Requirement (WDR) for Sanitary Sewer Systems. These goals include:

1. Complete a SSMP development plan and implementation schedule.
2. Properly manage, operate, and maintain all portions of the City's wastewater collection system.
3. Provide adequate capacity to covey peak wastewater flows.
4. Minimize the frequency of **SSO's.**
5. Mitigate the impacts that are associated with all **SSO's** that may occur.
6. Comply with all applicable regulatory notification and reporting requirements.

C. Appendix A – Development Plan and Schedule

Appendix **A** includes the following:

A-1 Lodi's SSMP Development Plan and Implementation Schedule

SECTION 2 - ORGANIZATION

A. WDR/SSMP Organization Requirement

The WDR/SSMP organization requirement specifies that each SSMP identify the following:

1. The name of the agency's responsible or authorized representative.
2. The names and telephone numbers for management, administrative, and maintenance positions responsible for implementing specific measures in the SSMP program. The SSMP must identify lines of authority through an organization chart or similar document with a narrative explanation; and
3. The chain of communication for reporting SSO's, from receipt of a complaint or other information, including the person responsible for reporting SSO's to the State and Regional Water Board and other agencies if applicable (such as County Health Officer, County Environmental Health Agency, Regional Water Board, and/or State Office of Emergency Services [OES]).

B. SSMP Responsibility Organization Chart

The SSMP Responsibility Organization Chart for Lodi is illustrated in Figure B-2.

Figure B-2. SSMP Responsibility Organization Chart

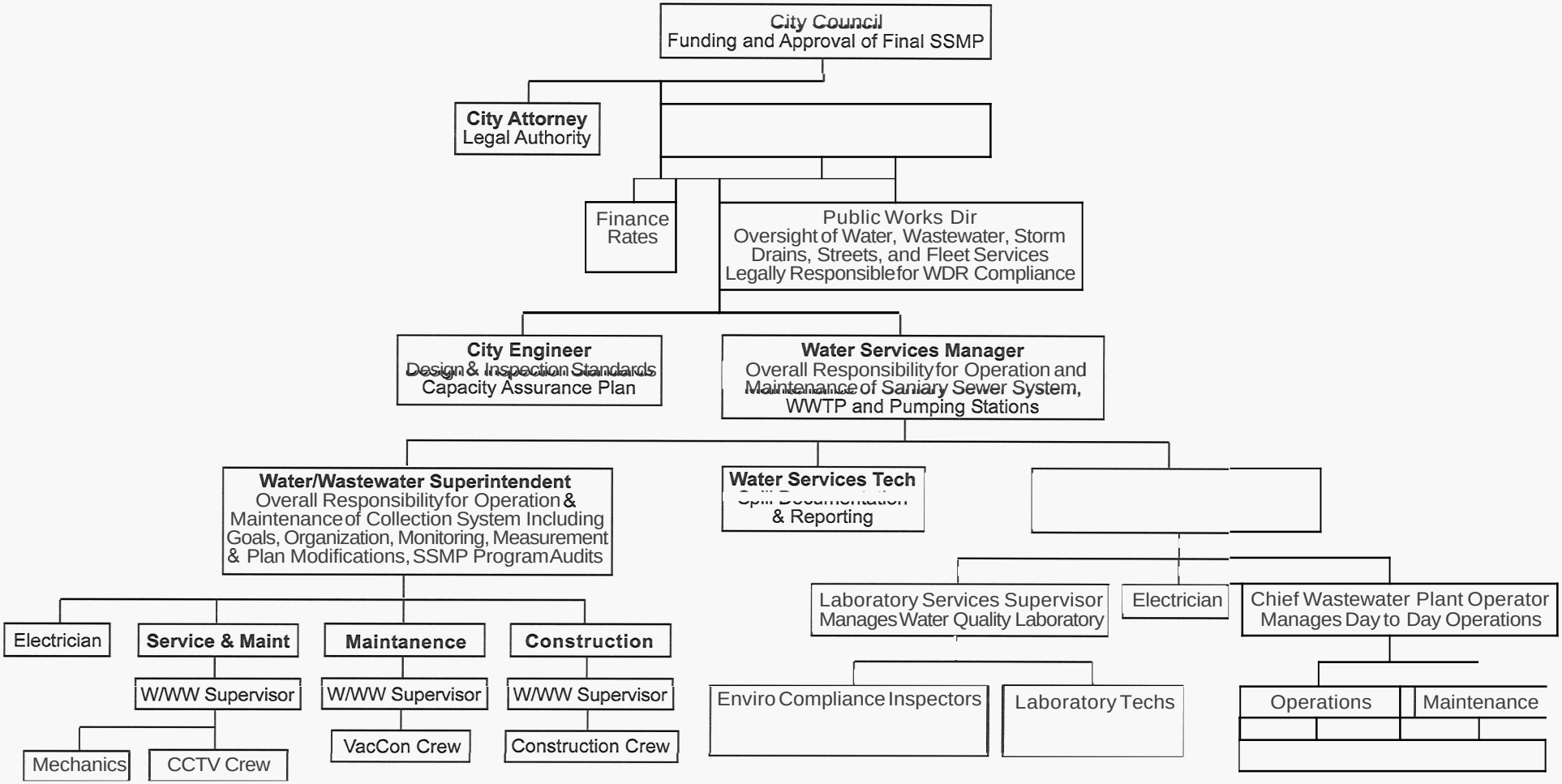

General Position Description - SSMP Responsibilities:

- City Council: The City Council is the elected governing board of the City. Members are elected "at large" through regular elections. The city, a municipal corporation, consists of all the territory within the boundaries thereof, and all territory outside the boundaries thereof over which it has jurisdiction or control by virtue of any constitutional or statutory provision. The City Council is responsible for approving budgets and setting policy.

- City Manager: The City Manager has the responsibility of management of all City Departments and all hiring of personnel, and conducts the upper level management and business of the City.

- City Attorney: Receives policy direction from the City Council and acts as legal advisor and counsel to the City Council., City Manager, and City Departments and represents the City in litigation against the City.

- Public Works Director: The Public Works Director is responsible to plan, organize, direct, and review the activities and operations of the Public Works Department. This includes the following Divisions: Water Services, Engineering, Streets and Drainage, Fleet and Facilities Services, and Transportation. The Public Works Director is the Legally Responsible Official (LRO) in the WDR.

- City Engineer/Deputy Public Works Director: The City Engineer is responsible for the Design and Performance standards and for the Capacity Assurance Plan

- Water Services Manager: Has overall responsibility for the management and oversight of the entire water and wastewater utilities. Oversees revenue and expenses, along with operation and maintenance of the Water Pollution Control Facility, wastewater collection system and drinking water system for the City. Has overall responsibility for the Sanitary Sewer Overflow Emergency Response Plan (SSORP), the FOG Control Program, Monitoring, Measurement, and Program Modifications, Periodic Audits, and the Communication Program. Overall responsibility for reporting SSO's to the State and Regional Water Board and other agencies when applicable.

- Water/Wastewater Superintendent: Overall responsibility for the operation and maintenance of the water distribution and the wastewater collection system. **As** needed will report SSO's to the State and Regional Water Board and other agencies when applicable.

- Water Services Technician: Performs technical duties such as mapping, drafting, and data management. Has responsibility for reporting as assigned. **As** needed will report SSO's to the State and Regional Water Board and other agencies when applicable.

- Laboratory Services Supervisor: Oversees the water/wastewater laboratory activities and the environmental compliance program, and prepares regulatory compliance reports. As part of the industrial waste program, oversees the pretreatment and FOG inspection programs.

- Environmental Compliance Inspector: Ensures that the City's Industrial Pretreatment Program is in compliance with local, State and Federal requirements. Performs FOG related inspections.

- Water/Wastewater Supervisor: Is responsible for the day-to-day supervision of the wastewater utility maintenance workers in the areas of closed-circuit television (CCTV) and system cleaning. Ensures that written SSO and maintenance reports are completed.

- Water/Wastewater Maintenance Worker 111: Responsible to ensure that the crews carry out the work assigned to them by the Supervisor. Each of the following crews is assigned one or two maintenance workers: construction, service maintenance, and wastewater system cleaning and CCTV. As needed, will record field data for SSO reports.

- Water/Wastewater Maintenance Worker I and Maintenance Worker II -: Responsible to carry out tasks and duties assigned by the Water/Wastewater Maintenance Worker III. Performs the CCTV inspections and, sewer cleaning. As needed, will record field data for SSO reports.

- Senior Plant and Equipment Mechanic: Oversees the operation and maintenance of the sewer lift stations including inspections, routine maintenance, trouble shooting and repairs. As needed, will record field data SSO repoi-ts.

- Plant and Equipment Mechanic: Performs the operation and maintenance of the sewer lift stations including inspections, routine maintenance, trouble shooting and repairs. **As** needed, will record field data for SSO reports.

- Utility Control Operator: Answers and dispatches customer calls, generates and closes out utility reports.

- Administrative Support Staff: Answer and dispatch customer call as needed.

C. Chain of Communication for Reporting SSO's

City of Lodi SSO Reporting Chain of Communication

1. Most reports are received by Lodi control and relayed to the water services division.

   Primary Staff member: Able Palecio, Utility operations Supervisor

   Backup staff member: Bob Anderson, Utility Service operator II

   Backup staff member: Pat Novinger, Utility Service operator II

   Backup staff member: Rod Brown, Utility Service operator II

   Backup staff member: Mark Verbiski, Utility Service operator II

2. Calls from Lodi control are received by water services division administrative staff. Usually Lodi Control contacts staff directly; administrative staff may receive initial reports from the public.

   Primary staff member: Diana Gonzales, Office Supervisor

   Backup staff member: Michelle Niemantsverdriet, Senior Administrative Clerk

3. During work hours documented calls from Lodi Control or administrative staff members are given to water/wastewater supervisors:

   Primary staff member: Ron Stawski Water/Wastewater Supervisor

Backup staff: Richard Lenfestey, Water/Wastewater Supervisor

Backup staff member: Chris Knoll, Water/Wastewater Supervisor

4. During work hours calls from Lodi Control or administrative staff are dispatched by the supervisors to watedwastewater maintenance workers who respond to the spills and are responsible for documenting the initial spill report.

   Primary staff members: All water/wastewater maintenance staff members are trained and respond to spills.

   Back staff members: All water/wastewater maintenance staff members are trained and respond to spills.

5. During non-work hours calls received from Lodi Control or the answering service are referred to the emergency call-out list. The emergency call-out list has all available water/wastewater staff members listed.

6. Initial reports are reviewed and signed by a water/wastewater supervisor and are forwarded to the Water/Wastewater Superintendent and/or the Water Services Manager for the remainder of the reporting to all applicable state agencies except the on line reporting step. **A** copy of the finalized signed spill report is forwarded to the Water Services Technician for the final posting to the states online reporting web site.

   Primary staff member: (Vacant), Water/Wastewater Superintendent

   Backup staff member: Kevin Gaither, Water Services Technician

   Backup staff member: Charlie Swimley, Water Services Manager

D. Appendix B – Organization Documents

Appendix B includes the following:

B-1 Contact List – Personnel Responsible for SSMP Elements

B-2 Contact List – Personnel Responsible for **SSO** Reporting

B-3 Water Services Division Flow-chart Sanitary sewer overflow plan

B-3 Contact List – Personnel Responsible for Responding to SSO's emergency call-out list (updated weekly)

SECTION 3 - LEGAL AUTHORITY

NOTE: In accordance with State Order No. 2006-0003-DWQ , this plan is intended to be an internal working document that will continually evolve to further improve operations and reduce SSO's. The red text in this plan reflects elements that are required by the order, however, implementation dates for the elements are left to the discretion of the agency. The proposed implementation dates are established in appendix A-2

A. WDR/SSMP Legal Authority Requirement

The WDR/SSMP Legal Authority requirement specifies that each Enrollee must demonstrate, through sanitary sewer system use ordinances, service agreements, or other legally binding procedures, that it possesses the necessary legal authority to:

1. Prevent illicit discharges into its sanitary sewer system, (examples may include I/I, stormwater, chemical dumping, unauthorized debris and cut roots, etc).
2. Require that sewers and connections be properly designed and constructed;
3. Ensure access for maintenance, inspection or repairs for portions of the lateral owned or maintained by the Public Agency;
4. Limit the discharge of FOG and other debris that may cause blockages, and
5. Enforce any violation of its sewer ordinances.

B. Industrial Pretreatment Program

The following is an overview the Industrial Pretreatment program extracted from the Lodi Municipal Code (LMC):

LMC 13.12.120 Federal pretreatment requirements.

Users in industrial categories subject to the categorical pretreatment standards development by the EPA under the Clean Water Act of 1977 (PL 95 217) 33 U.S.C. 1251 et seq. are required to achieve limitations based on best practical control technology (BPT) immediately and best available technology economically achievable (BAT) by July 1, 1983, in accordance with Sections 301 and 304. New sources are required to comply with new source performance standards (NSPS) based on best available demonstrated control technology (BDT) for industrial users in terms of concentration and equivalent mass values. Users must comply with pretreatment standards promulgated pursuant to Section 307 and the Federal Register 40 CFR Subchapter IV. Dilution of any discharge may not be used to comply with any pretreatment standards. Categorical industrial users must submit baseline monitoring reports, compliance schedule reports, ninety-day compliance reports, and periodic reports on continued compliance as required including identifying information per 40 CFR 403.12(1) and such reports must be signed by an authorized representative

B. Comply with water quality standards, sludge disposal or effluent limitations specified in the city's National Pollutant Discharge Elimination System (NPDES) permit;

C. Meet technically based local limits, which must be calculated per federal pretreatment program guidelines. The city must annually provide public notification of industrial users which during the previous twelve months significantly violated applicable pretreatment standards. (Ord. 1613 (part), 1995)

LMC 13.12.130 Industrial waste permits.

Source control of industrial discharges shall be accomplished by use of a permit and monitoring system as described in this chapter. Discharge of industrial waste from any person within the city onto land or to any natural outlet may be permitted only if the discharge complies with all requirements of the regional water quality control board and of all other local, state and federal laws and regulations. (Ord. 1613 (part), 1995)

C. Municipal Code and Design and Construction Standards

LMC 13.12.280 Design standards

All construction of public sewerage systems or appurtenances thereof shall conform to the design criteria, the standard plans and specifications and the inspection and testing procedures in accordance with current city public improvement design standards. (Ord. 1613 (part), 1995)

6-71 Sanitary Sewer Construction Specifications

6-71.01 General Sanitary sewers shall be furnished and installed in accordance with the applicable sections of the Standard Specifications listed in these Special Provisions, these Special Provisions and as shown on the plans. Sanitary sewer pipe shall be either extra strength vitrified clay pipe (VCP), all sizes polyvinyl chloride pipe (PVC), up to 15", and asbestos cement pipe (ACP), up to 8".

D. Municipal Code – Sewer Access Authority

LMC 13.12.520 Inspection, sampling, monitoring and analysis.

The public works director or designated representative may inspect the facilities of any user to ascertain whether the purpose of this chapter is being met and all requirements are being complied with. Persons or occupants of premises where wastewater is created or discharged shall allow the public works director or designated representative ready access at all reasonable times to all parts of the premises for the purposes of inspection or sampling or in the performance of any of their duties. The public works director or designated representative shall have the right to set up on the user's property such devices as are necessary to conduct sampling or metering operations and be allowed to copy any of the user's discharge records. **All** user discharge records shall be retained for a minimum of three years per **40** CFR 403.12(o). Where a user has security measures in force which would require proper identification and clearance before entry into their premises, the user shall make necessary arrangements with its security guards so that upon presentation of suitable identification, the public works director or designated representative will be permitted to enter without delay for the purposes of performing their specific responsibilities. The user will be charged a fee to recover the costs for inspections (investigations), sampling, monitoring and analyses

performed by the city for purposes of billing and ensuring compliance with all regulations. (Ord. 1613 (part), 1995)

E. Municipal Code – FOG

LMC 13.12.115 Grease, oil and sand interceptors.

Grease, oil and sand interceptors shall be provided by the discharger when they are necessary for the proper handling of wastes containing grease in excess of one hundred fifty milligrams per liter of animal and vegetable origin and fifty milligrams per liter of mineral origin, or any flammable wastes, sand, grit and other harmful ingredients. All interceptors shall be of a type and capacity approved in writing, prior to installation, by the public works director, and shall be located so as to be readily and easily accessible for cleaning and inspection. Grease and oil interceptors shall be constructed of impervious materials capable of withstanding abrupt and extreme changes in temperature. They shall be of substantial construction, watertight, usually a minimum of one thousand gallons and equipped with easily removable covers which, when bolted in place, are gastight and watertight. Grease and/or oil/sand interceptors shall be constructed in any place or building having a capacity to serve group meals or commercial and industrial cleaning facilities. Where installed, all grease, oil, sand and grit interceptors shall be maintained by the owners at owner's expense in continuous efficient operation at all times. Materials collected shall not be reintroduced into the sewerage system. Records of all maintenance, cleaning and hauling of materials shall be maintained by the owner and such records shall be available at all times for inspection by city personnel. (Ord. 1613 (part), 1995)

F. Municipal Code – Enforcement Authority

LMC 13.12.570 Cease and desist order.

When the city finds that a discharge of wastewater has taken place in violation of prohibitions or limitations of this chapter, or the provisions of a wastewater discharge permit, the public works director may issue an order to cease and desist, and direct those persons not complying with such prohibitions, limits, requirements or provisions, to:
A. Comply forthwith;
B. Comply in accordance with a time schedule set forth by the city; or
C. Take appropriate remedial or preventive action in the event of a threatened violation. (Ord. 1613 (part), 1995)

LMC 13.12.600 Liability.

Any person, firm or corporation, or any partner, officer, agent or employee thereof, who deposits or permits to be deposited into the city's sewerage system any wastes other than those permissible under the terms of this chapter and the terms of a valid permit granted under this chapter is liable for any and all damage caused to the city by virtue of such act, including compensation for damage to the city's facilities, and all costs of any legal fees, suits or judgments against the city which may be attributable to such wastes so discharged. (Ord. 1613 (part), 1995)

LMC 13.12.610 Injunction.

Whenever a discharge of wastewater is in violation of the provisions of this chapter or otherwise causes or threatens to cause a condition of contamination, pollution or nuisance, the city may

petition the superior court for the issuance of a preliminary or permanent injunction, or both, as may be appropriate in restraining the continuance of such discharge. (Ord. 1613 (part), 1995)

LMC 13.12.620 Damage to sewerage system-Charge.

When a discharge of wastewaters or any other substance causes an obstruction, damage or any other impairment to the city's sewerage system, the city shall assess a charge against the user for the work, materials and services required to clean or repair the affected portions of the sewerage system. (Ord. 1613 (part), 1995)

LMC 13.12.630 Civil penalties.

Any person who violates any provision of this chapter or permit condition or who discharges wastewater which causes pollution, or who violates a cease and desist order, prohibition, effluent limitation, national standard of performance, pretreatment or toxicity standard shall be liable civilly to a penalty not to exceed six thousand dollars for each day in which such violation occurs. The city attorney, upon order of the city council, shall petition the superior court to impose, assess and recover such sums. (Ord. 1613 (part), 1995)

LMC 13.12.640 Termination of service.

The city may revoke any wastewater discharge permit, or terminate or restrict or cause to be terminated or restricted wastewater service to any premises, which may include termination or restriction of the water service if warranted, if a violation of any provisions of this chapter is found to exist or if a discharge of wastewater causes or threatens to cause a condition of contamination, pollution or nuisance as defined in this chapter. The city also reserves the right to immediately disconnect any user, upon informal notice only, in the event of an unlawful discharge which may cause imminent danger to human health, the environment, or which threatens to interfere with the treatment plants operation. This provision is in addition to other statutes, rules or regulations, authorizing termination of service for delinquency in payment. (Ord. 1613 (part), 1995)

G. Inter-Agency Agreements and Satellite Systems

The City currently has a Memorandum of Understanding with Flag City as the sole satellite sewer system. A satellite sewer or collection system is the portion, if any, of the sanitary sewer system which is owned or operated by a different public agency than the agency that owns and operates the wastewater treatment facility to which the sanitary sewer system is tributary. The City also has Industrial System Discharge Permits and Encroachment Permits for many local wineries. Since these are private systems that connect to the City's sewer system, they are not considered satellite systems under the WDR.

Appendix C – Legal Authority Documents

Appendix C includes the following:

C-1 Pretreatment Program Enforcement Response Plan - TOC
C-2 Municipal Codes

C-3 Sanitary Sewer Design
C-4 Sanitary Sewer System Construction
C-5 Joint Exercise of Powers Agreement:
C-6 City and City Inter-Agency agreement

SECTION 4 - OPERATION AND MAINTENANCE ACTIVITIES

NOTE: In accordance with State Order No. 2006-0003-DWQ , this plan is intended to be an internal working document that will continually evolve to further improve operations and reduce SSO's. The red text in this plan reflects elements that are required by the order, however, implementation dates for the elements are left to the discretion of the agency. The proposed implementation dates are established in appendix **A-2**

A. WDWSSMP Operation and Maintenance Program Requirement

The WDR/SSMP Operation and Maintenance Program requirement specifies that each SSMP must include those elements listed below that are appropriate and applicable to the Enrollee's system:

Maintain an up-to-date map of the sanitary sewer system, showing all gravity line segments and manholes, pumping facilities, pressure pipes and valves, and applicable storm water conveyance facilities;

2. Describe routine preventive operation and maintenance activities by staff and contractors, including a system for scheduling regular maintenance and cleaning of the sanitary sewer system with more frequent cleaning and maintenance targeted at known problem areas. The Preventative Maintenance (PM) program should have a system to document scheduled and conducted activities, such as work orders;

3. Develop a rehabilitation and replacement plan to identify and prioritize system deficiencies and implement short-term and long-term rehabilitation actions to address each deficiency. The program should include regular visual and television inspections of manholes and sewer pipes, and a system for ranking the condition of sewer pipes and scheduling rehabilitation. Rehabilitation and replacement should focus on sewer pipes that are at risk of collapse or prone to more frequent blockages due to pipe defects. Finally, the rehabilitation and replacement plan should include a capital improvement plan that addresses proper management and protection of the infrastructure assets. The plan shall include a time schedule for implementing the short- and long-term plans plus a schedule for developing the funds needed for the capital improvement plan;

4. Provide training on a regular basis for staff in sanitary sewer system operations and maintenance, and require contractors to be appropriately trained; and

5. Provide equipment and replacement part inventories, including identification of critical replacement parts.

B. Lodi Collection System Maps

The City's wastewater collection system maps are maintained and managed in the following manor:

1. The City has up-to-date maps of the wastewater collection system. Map are generated electronically using Autodesk Map Guide, an AutoCAD based program. The electronic maps are viewable from the City's web page under the "Mapping" tab. The mapping shows the approximate location of the manholes and connecting sewer pipelines when the "Wastewater" tab is checked and an area has been selected and expanded to an appropriate scale. As one zooms in on an area of interest, the pipeline size is shown along with an arrow that indicates the direction of flow in the pipeline. Zooming in closer will display the recorded length of the pipeline segment. If the computer mouse pointer is positioned over one of the circles indicating a manhole location, the manhole number will be displayed on the screen. If the pointer is positioned over any of the lines indicating the sewer pipelines, attributes about the pipeline are shown.

2. Hard copy 11" x 17" maps are located in the Water Services Division field trucks and at the City's Municipal Service Center and City Engineering office, see Appendix D-1 "Collection System Grid Map".

C. Lodi Preventive Operations & Maintenance Activities

1. Collection System Overview and Responsibility

Overview

The City's Water Services Division provides service to a population of approximately 63,400 people. The wastewater collection and conveyance system consists of 188.5 miles sewer pipe ranging in size of 4-inches to 36-inches in diameter, about 3,200 manholes, and 9 pumping or lift stations that convey an average dry weather flow of approximately 6.6 MGD. Sanitary sewerage is conveyed from the City's 12 mile geographical service area to White Slough Wastewater Treatment Plant.

The vast majority of Lodi's wastewater collection system gravity sewer was constructed using vitrified clay sewer. Vitrified clay pipe (VCP) is pipe made from clay that has been subjected to verification, a process which fuses the clay particles to a very hard, inert, glass-like state. VCP is commonly used in sewer gravity collection mains because of its reasonable price and resistance to almost all domestic and industrial sewage, particularly the sulfuric acid that is generated by hydrogen sulfide, a common component of wastewater. About 58% of Lodi's gravity sewer system was constructed using VCP. The other major pipe materials used have been plastic (28.8%) and reinforced concrete pipe (9.8%). Approximately 73% of the gravity sewer system is composed of pipeline with a diameter of 8-inches or less. Over 92% of the gravity sewer system is composed of pipeline with a diameter of 18-inches or less. All of the pressure sewers (force mains) are constructed using pipelines that are 18-inches in diameter or less.

The City operates and maintains nine wastewater pumping stations, also called lift stations. The pumping stations are also called lift stations since the pumps lift the water from the deeper incoming sewers and discharge the water into a nearby sewer located at a higher elevation than the pipeline leading into lift station wet well.

All of the pump stations are equipped with constant speed pumps. Seven of these pumping stations are wet pit / dry pit type package pumping stations. The other two are submersible pump stations. All of the wet pit / dry pit pumping stations have been manufactured by Smith & Loveless. These stations arc manufactured using steel shells using preset dimensions set by the manufacturer. This standardization helps by allowing some parts to be interchanged between pumping stations. It also allows for standardization of the operation and maintenance procedures.

Lift stations are generally differentiated from pumping stations in that lift station generally have very short discharge pipelines, with only enough pipeline to lift the water from the deeper inlet sewers to a shallower discharge sewer located near the lift station. Seven (7) of the lift stations are separate wet pit / dry pit design types constructed using prefabricated components installed in steel units. Wet pit / dry pit type pumping stations have a separate wet well from the "dry pit" where the pumps, motors, and electrical controls are located. Connecting pipes allow the pumps to pump the wastewater from the wet pit through gate valves into the pumps and then discharge the wastewater to the discharge piping through a set of check and gate valves. The check valve protects the pump from back pressure on the discharge line when the pump is not running. The two gate valves are installed to allow the pump to be removed from service for maintenance or replacement.

Two (2) of the lift stations are submersible pump stations. Submersible pump stations have only one chamber where the wastewater is received from the sewers and where the pumping equipment is located. With this type of pumping stations the pumps are lowered into the wastewater in the wet well on a rail system where the discharge pumping connects as the pump is lowered to its desired placement. The pumps and connected motors are specially designed so that they can operate successfully while being fully submerged in the wastewater.

Seven (7) of the sewer lift stations have fixed backup power generators installed at the stations. The two lift stations that do not have backup power includes the domestic lift station that only serves a public restroom facility at one of the City's parks (Lodi Lakes) and the Industrial lift station at Sacramento Street.

All but one of the lift stations (Lodi Lake) has information about how it is operating relayed to Lodi Control where this information is monitored for abnormal conditions. When abnormal conditions like high water levels in the wet well are noted, a field crew is dispatched to determine what might be causing this condition and to correct it.

The City maintains the sewer pipelines and the pumping stations. The City does NOT own or maintain the service lateral piping which conveys the wastewater from the house or structure to the connection to the sewer main. The property owner is responsible for any maintenance in the service lateral.

Responsibility

The Water Services Manager has overall responsibility for the management and oversight of the City's water and wastewater utilities including the Sewer System Management Plan and the monitoring and reporting plan. He oversees revenue and expenses, along with operation and

maintenance of the White Slough Wastewater Treatment Plant, wastewater collection system and drinking water system for the City.

The operation and maintenance of the wastewater collection system is performed by the Water Services Division of the Public Works Department. The Water/Wastewater Superintendent manages the operation and maintenance of the wastewater collection system pipelines and the sewer lift stations. There are three Supervisors working under the Water/Wastewater Superintendent with one maintenance crew assigned to each Supervisor. There is also a Senior Plant & Equipment Mechanic and a Public Works Electrician who report directly to the Water/Wastewater Superintendent. A Plant and Equipment Mechanic works under the Senior Plant and Equipment Mechanic. These positions include 3 management level positions, 5 supervisory positions, 14journey level positions, and 2 entry level positions.

The Laboratory Services Supervisor at the wastewater treatment plant is responsible for the water quality testing that is performed in the water quality laboratory and for NPDES compliance reporting. All testing for fats, oils and grease is performed at the wastewater treatment plant laboratory.

The City has 2 Maintenance Technicians 3's who are assigned as the lead person to operate the Vac/Con cleaning truck. These two people are rotated every 4 months, rotating between one of the 3 maintenance trucks when they are not assigned to the hydro flusher cleaning truck. The City has 2 Maintenance Technicians 3's who are assigned to operate the CCTV equipment. These two people are rotated every 4 months, rotating to the wastewater treatment plant when they are not assigned to the CCTV van. The rotation keeps the experience and expertise needed to correctly operate this equipment while also providing diversity of assignments.

2. Pipeline Cleaning Program

The City uses a preventive maintenance (PM) approach to operating and maintaining the wastewater collection system. The pipeline preventive maintenance or PM program consists of:

a. Cleaning the 161 pipelines segments where grease related stoppages have occurred one or more times on a cycle of approximately once every 2 months. (Appendix D-2 "Hot Spot List")

b. Cleaning the entire pipeline system which is currently estimated to be completed over a 3 year interval.

c. Viewing the internal pipeline conditions of the gravity sewer pipelines using closed circuit television inspection equipment to determine where the pipeline should be repaired or replaced.

d. Inspecting and maintaining the pumping stations bi-weekly, or once every other week.

e. Making emergency repairs as needed.

f. Developing rehabilitation projects for repairs that do not need to be repaired immediately and funding these projects through the City's Capital Improvement Plan.

The cleaning is prioritized to first clean the pipelines on the City's Two Month list. A field copy of the Two Month list and a spreadsheet summarizing the pipeline information is included in Appendix D-2. This list includes pipelines where multiple stoppages have occurred, where a pipeline is added

to the list if there have been stoppages reported in the public sewer main pipeline within the past 5 years.

In addition to cleaning the pipelines on the Two Month list, the crews clean the pipelines that are going to be inspected by the closed circuit television (CCTV) crew. The work with the CCTV crew is scheduled to systematically clean and TV the pipelines using the City's map grid system. Under this approach, all of the pipelines in one of the City's map grids are cleaned and inspected before the crews move onto the next grid.

Sewer cleaning or flushing is performed using the combination high velocity cleaner / vacuum truck. Sewer cleaning is accomplished using a machine that pressurizes water contained on the truck. The water is conveyed into the sewer pipeline through a high pressure hose where the water is released at high pressure through one of several nozzles that can be attached to the end of the hose. The nozzles direct the high pressure water to be released into the sewer in a conical pattern behind the nozzle, creating a high pressure cone of water that is reeled back though the pipeline using a winch on the truck. This sprays the interior of the pipeline with the high pressure water and will clean off collected sediment and scum from the pipeline walls. This operation is also called "hydro-flushing".

The selection of the cleaning nozzle used during hydro flushing is dependent upon conditions expected to be encountered in the pipeline. The standard radial nozzle is used when it is suspected that the pipeline will contain mostly solids and grit. The nozzle jets on the standard nozzle are designed to clean the pipe wall and flush debris back towards the downstream manhole. Where grease deposits are anticipated, the warthog nozzle is used. The warthog rotary nozzle is designed to clean and remove grease and light root accumulations from mainlines and service laterals. This nozzle is a self rotating nozzle with the head propelled by jet rotation force. An internal fluid governor controls the rotation speed during cleaning. For plugged sewers, a penetrator nozzle is used.

Where root removal is needed, an attachment that contains links of chain can be attached to the end of a special nozzle that will spin the chain links at high speed as the nozzle is passing through the pipeline. This "chain flail" will cut off most of the roots in a pipeline if they are not too large.

Hydro-flushing is performed starting at the upstream manhole and pulling the hose and nozzle downstream so that the water and debris can wash out of the pipeline being cleaned. When a lot of grease or debris is encountered, the vacuum tubing is placed in the downstream manhole to remove debris and grease from the downstream manhole as this material is being removed from the pipeline.

The cleaning crew will note the relative amount and type of material removed during the cleaning operation on the Vac/Con daily report. The amount of grease, sand, and solids is noted on this report where the amount is noted as a dash for none, light, moderate, or heavy. **A** blank copy of the Wastewater System Maintenance Daily Report and three copies of completed reports are included in Appendix __.

3. Sewer Pipeline and Manhole Inspection

The City's inspection program consists of visual observation by field crews and closed circuit television (CCTV) inspection.

a. Closed circuit television (CCTV) inspection

The Water Services Division owns and operates a TV van equipped with closed circuit television (CCTV) inspection equipment including a self propelled TVI camera with a reel of cable connecting the camera to the van while the camera is inside a pipeline during an inspection. The van is also equipped with a viewing and recording station with a computer, monitor, and video recording equipment.

Data is collected and stored on the computer located on the CCTV van. The data is captured and stored using Cues DataCap 4.0 software. This software has built in codes for coding and storing collected defect and attribute information. The data is transferred to the Water Services Division's offices at the Corporation Yard nightly by burning CD's and printing hard copies of the inspection repoi-ts. A copy of a typical inspection report is contained in Appendix __.

Most of the CCTV work is accomplished using the self propelled tractor unit. The tractor is propelled by a tract type device, similar to the tracts on an Army tank. There are some small lines where the camera is attached to skids and is pulled through the pipeline using the hose from the cleaning truck. All distances are referenced to the face of the camera.

b. Visual Inspections

Visual inspections are performed on the sewer system manholes at a higher frequency than CCTV inspections because of the relative ease of performance. This type of inspection can give a good indication as to the condition and proper functioning of the collection system and generally includes:

i. Manhole Inspection
   - Frame and cover
   - Grade adjustments
   - Flow surcharging
   - Manhole bottom channels
   - Structural integrity/manhole degradation
   - I/I into manhole
   - Other miscellaneous problems

ii. Sewer Inspection
   - Dirt and stone brought back while cleaning
   - Abnormal amount of debris in line
   - Excessive amounts of grease in line
   - Blockage or obstruction in line
   - Excessive flow (relative to upstream flows)
   - Any miscellaneous problems

   Any of the above items would result in further study of the sewer and include CCTV inspection, sewer repair, or manhole repair

iii. CCTV Inspection
   - Requested by cleaning crew because of a suspected problem
   - In connection with I/I investigation work
   - Condition assessment for justifying sewer rehabilitation work

- Routine check on the effectiveness of sewer cleaning

4. Pumping or Lift Station Maintenance

The Water Services Division has a maintenance program and schedules to minimize the number of lift station failures. The City's Preventive Maintenance (PM) program for the pumping or lift stations includes inspecting and maintaining the pumping stations once every other week. The maintenance schedule for the lift stations is included in Appendix D-4. During the biweekly checks the pumps are manually started to be sure that they are working; the humidifier, fans, and vent are checked; the bubbler switch is turned to check the compressors, the check valves are lifted to check that they are working correctly, and the pumps are back flushed if there is any indication that they may be plugged. The pump hours are recorded and the switch positions are noted. The emergency generators are also checked. A sewer lift station check list is included in Appendix D-4. If major work is performed at the site, an entry is also made into the City's lift station log book.

5. Construction and Repair

When identified, pipe segments are repaired either by City crews or by outside contractors. The division budgets annually for this task.

6. Customer Service

The City responds to all customer complaints or requests for information. A copy of the City's Customer Service Request is attached in Appendix D6. The division collects customer service feedback through surveys handed out by maintenance crews and mechanics.

7. Staff Suppoi-t

The Water Services Division field operation is supported by a full time Office Supervisor, one Senior Administrative Clerk and one Administrative Clerk. The duties of these positions include answering and dispatching customer calls; generating and closing out customer service request and work orders. Acts as a receptionist to interact with the general public, maintains statistical records and tabulates data; receives two-way radio calls; secures and records information and uses radio to dispatch necessary city services.

8. Scheduling and Management Information System

Work is scheduled daily based on current needs. The City uses a standard 40 hour work week. At the end of each month, the Sewer Collection System Supervisor tabulates the work accomplished during the month.

Work is tracked through time sheets. Lift station data is summarized on spreadsheets. Budget data is kept on a spreadsheet.

D. Lodi Rehabilitation and Replacement Plan

The City's wastewater collection system rehabilitation and replacement plan is included in the 9-year Capital Improvement Program (CIP) based on specific project needs. The City also budgets for unknown

needs in the annual operating budget by budgeting for sewer pipe materials and other general supplies used during the course of a year by the City's crews.

The City has identified wastewater pipelines that need to be replaced due to high levels of infiltration and inflow, blocked sewers, and problem pipelines located in backyard easements. The City has also identified a number of water pipelines that need to be replaced. The City has budget for and created Capital improvement Projects 3 and 4 to address water and sewer replacement needs. These projects combine like elements in similar parts of the community for construction. The funds for Projects 3 & 4 are generally proportioned by about 40% for water main replacements and 60% for sewer main repair or replacement.

E. Lodi Training Plan

The City Water Services Division provides the following training incentives and for the wastewater collection system staff

1. Employees are given a 2% pay incentive for California Water Environment Association (CWEA) Collection System Operator certification for level above their job responsibilities. To maintain their certification they must complete 12 hours of continuing training every two years. The test for the required CWEA certification ensures that employee that hold these certification do possess the knowledge, skills and abilities to skillfully perform the collection system operator duties. See CWEA website http://www.cwea.org/pdf/tcp/hb_csm.pdf for most current requirements.

2. Employee safety and response training

   a Hold bi-weekly safety tailgate meetings and maintain sign-in log.

   b Present safe practice reminder at all meetings.

   c Confined space entry – formal confined space entry program

   d Review Material Safety Data sheets (MSDS) for new chemicals used.

   e SSO / emergency response

3. Employee certifications and training

   a. Employees to receive and renew job specific certifications for DMV, CPR, and First Aid, as required.

   b. Employees shall be knowledgeable of and re-trained in the Confined Space Procedures, annually.

   c. Employees shall be knowledgeable of and re-trained in the Gas Detector Procedures, annually.

   d. Staff is sent to out sourced training programs with formal curriculums that cover confined space safety, lockout and trench/shoring training. These elements require testing and certification of successful completion. Training records are kept by the City's Water Services Division.

F. Equipment and Critical Replacement Parts

The Water Services Division's equipment and critical replacement parts inventory lists are located in Appendix D-5.

The City maintains contingency equipment and some replacement parts for the wastewater system. The equipment and spare parts are stored at the City's Corporation Yard or at the White Slough Wastewater Treatment Plant. This inventory includes:

1. ___2___ portable pumps *
2. ___0___ portable emergency generators *

* Portable generators and additional pumps are available 24/7 from multiple local equipment suppliers like United Rentals and Rain For Rent.

3. An assortment of various sized plastic and vitrified clay pipe ranging in size from 4-inches to 12-inches in diameter
4. Spare manhole covers

Lodi maintains spare electrical components for the lift stations at the wastewater treatment plant. Seven of the lift stations have emergency generators on site in the event of a power outage. Seven (7) of the lift stations have SCADA monitoring that is relayed to Lodi Control for remotely monitoring lift station operating conditions, i.e. pump running, high wet well levels, power failures, etc. The City can also readily repair any pipeline collapse that may occur for any pipe size up the 12-inches in diameter which covers 95% of the sewer system. In addition to spare parts on hand, there are three shops in Modesto (Center State Pipe & Supply Co, Groeniger & Co. and Howk Systems) where replacement piping and equipment can be obtained 24 hours per day 7 days per week.

G. Appendix D – Operation and Maintenance Program Documents

Appendix D includes the following:

D-1 City of Lodi Sewer Map Grid System
D-2 Maintenance Cleaning Schedule
D-3 Closed Circuit Television Video Report
D-4 Standard Operating Procedure (SOP)
D-5 CWEA Certification Handbook
D-6 Equipment Inventory List
D-7 Critical Replace Parts List (to be included at a later date)
D-8 Technical Memorandum O&M Program *SSMP* Audit-Rehabilitation and Replacement Plan

SECTION 5 - DESIGN AND PERFORMANCE PROVISIONS

NOTE: In accordance with State Order No. **2006-0003-DWQ** , this plan is intended **to** be an internal working document that will continually evolve *to* further improve operations and reduce SSO's. The red text in this plan reflects elements that are required by the order, however, implementation dates for the elements are left to the discretion of the agency. The proposed implementation dates are established in appendix **A-2**

A. WDR/SSMP - Design and Performance Provisions Requirement

The WDR/SSMP Design and Performance Provision requirement specifies that each Enrollee have the following:

1. Design and construction standards and specifications for the installation of new sanitary sewer systems, pump stations and other appurtenances; and for the rehabilitation and repair of existing sanitary sewer systems; and

2. Procedures and standards for inspecting and testing the installation of new sewers, pumps, and other appurtenances and for rehabilitation and repair projects.

B. Sanitary Sewer Design and Specifications

The City's sewer design standards and specification are located in the City Engineer's office. The following is an overview of those requirements:

The purpose of the City Design Standards is to provide direction in the application of improvements which are to be dedicated to the public and accepted by the City for maintenance or operation, and to provide for coordinated development of those facilities to be used by and for the protection of the public. This includes certain private works, as well as improvements to be installed within existing City rights-of-way and easements. Whereas it is the intent of these Standards to govern all new construction, City staff shall interpret and apply the Standards in a manner which achieves their intent, while encouraging and enabling the redevelopment of infill and vacant parcels especially within the City's Redevelopment Project Area.

All improvements within the City rights-of-way shall be installed in accordance with the approved improvement plans and specifications, the City of Lodi Design Standards, the City of Lodi Construction Standards and the State of California Department of Transportation Standard Specifications.

C. Sanitary Sewer Construction and Performance Provisions

The City's/District's construction standards are located in the City Engineer's Office. The following is an overview of those requirements:

Lodi's Department of Public Works Standard Plans for wastewater series 200, miscellaneous series 500 and engineering series 600 cover-design and construction standards and specifications for the installation of new sanitary sewer systems.

Lodi uses CCTV inspection and standard plan 610 sanitary sewer leakage test both hydrostatic and air test for newly installed sewers acceptance

D. Appendix E – Design and Performance Provision Documents

Appendix E includes the following:

E-1	Table of Contents – Section Blank – Sanitary Sewer Design
E-2	Table of Contents - Section Blank – Sanitary Sewer System construction
E-3	Standard Plans
E-4	Technical Memorandum, SSMP Preparedness Audit Design and Performance Provisions

SECTION 6 - OVERFLOW EMERGENCY RESPONSE PLAN

NOTE: In accordance with State Order No. 2006-0003-DWQ , this plan is intended to be an internal working document that will continually evolve to further improve operations and reduce SSO's. The red text in this plan reflects elements that are required by the order, however, implementation dates for the elements are left to the discretion of the agency. The proposed implementation dates are established in appendix **A-2**

A. WDR/SSMP Overflow Emergency Response Plan Requirement

The WDR/SSMP Overflow Emergency Response Plan requirement specifies that each Enrollee shall develop and implement an Overflow Emergency Response Plan (OERP) that identifies measures to protect public health and the environment. At a minimum, this plan must include the following:

1 Proper notification procedures so that the primary responders and regulatory agencies are informed of all SSO's in a timely manner;

2 A program to ensure an appropriate response to all overflows;

3 Procedures to ensure prompt notification to appropriate regulatory agencies and other potentially affected entities (e.g. health agencies, Regional Water Boards, water suppliers, etc.) of all SSO's that potentially affect public health or reach the waters of the State in accordance with the Monitoring and Reporting Program (MRP). All SSO's shall be reported in accordance with this ***MRP,*** the California Water Code, other State Law, and other applicable Regional Water Board WDR's or NPDES permit requirements. The SSMP should identify the officials who will receive immediate notification;

4 Procedures to ensure that appropriate staff and contractor personnel are aware of and follow the Emergency Response Plan and are appropriately trained;

5 Procedures to address emergency operations, such as traffic and crowd control and other necessary response activities; and

6 A program to ensure that all reasonable steps are taken to contain and prevent the discharge of untreated and partially treated wastewater to waters of the United States and to minimize or correct any adverse impact on the environment resulting from the SSO's, including such accelerated or additional monitoring as may be necessary to determine the nature and impact of the discharge.

B. Notification Procedures

The Water Services Division SSO notification procedures are contained in the City Water Services Division's sanitary sewer overflow procedures manual, and a copy is located in the on call vehicle. The procedures are in a three ring binders and are available to all Water Services Division personnel responsible for responding to SSO's, mitigating SSO's and reporting SSO's. The organizational response plan and chain of communication chart are located the City of Lodi's MSC and the complete written response plan including names and contact information is located in Appendix F-1. Whenever SSO procedure updates are necessary they are made and a revised date is placed on each page of the procedure. This helps to ensure timely SSO response, migration and reporting. Figure 6-2 illustrates the Water Services Division's SSO response and notification procedures.

C. Response Program

The Water Services Division has developed procedures for responding to SSO's. The purpose of these procedures is to ensure that all SSO responses are handled efficiently and effectively and that all regulatory requirements are met. Collection Systems Division staff is required to know and follow these procedures. These procedures are summarized in Figure B-3 below.

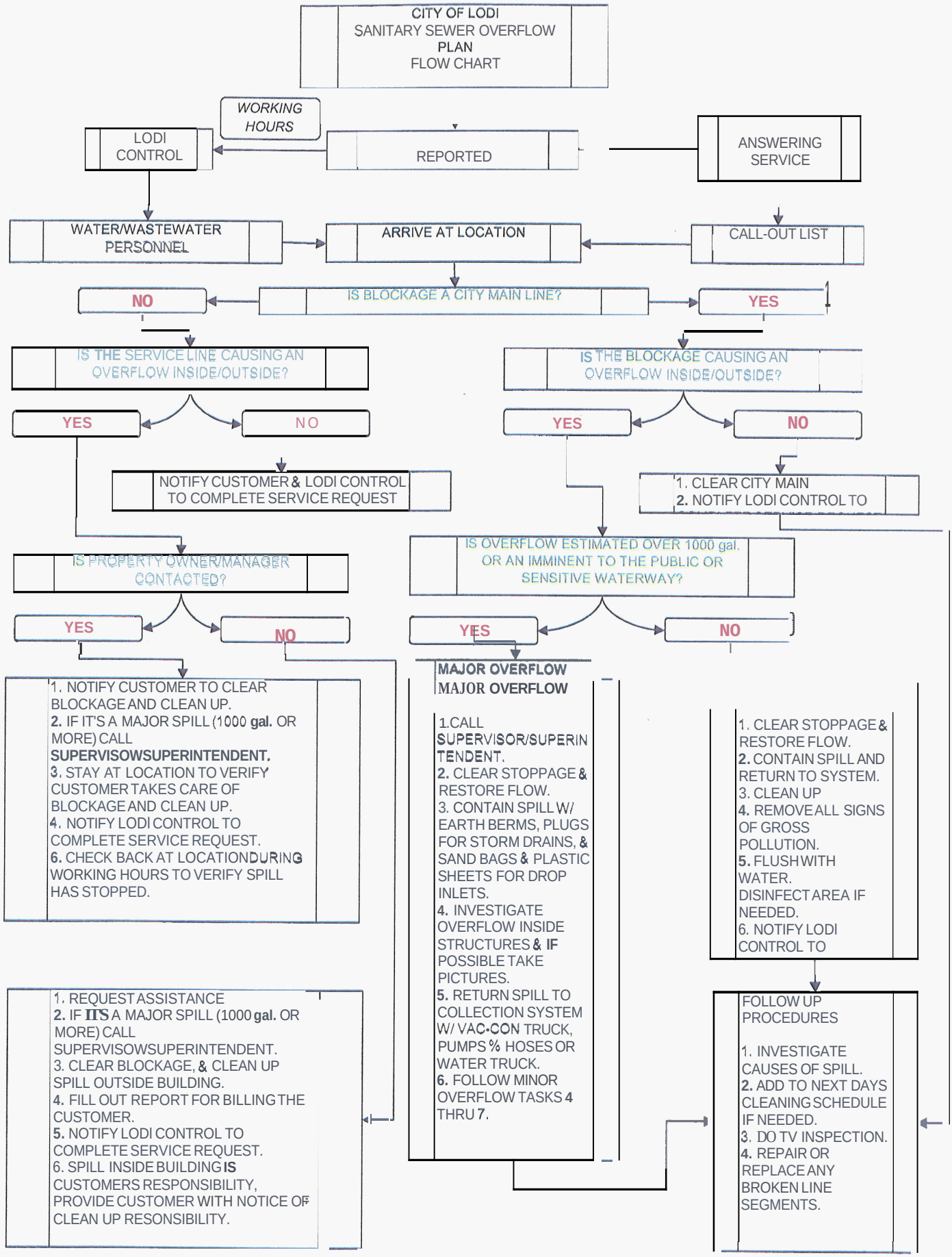

Figure B-3. SSO Plan Flow Chart

D. Regulatory Notification Procedure

The Public Works Director is the legally responsible official (LRO) to certify SSO reports that have been submitted to SWRCB data base. Both the Public Works Director and the Water Services Manager are responsible for reporting SSO to the SWRCB, RWQCB, OES and Health Department as necessary.

E. Staff and Contractors Training

The Water Services Division has established and implemented the following SSO response training:

Water Services Division employees are required to complete SSO response training and periodically throughout the year spill response is covered in the weekly safety tailgate meetings.

Contractors are advised of the City's wastewater collection system policies and procedures and are required to train all of their employees on the City's procedures prior to performing work on the City's wastewater collection and conveyance system.

F. Emergency Response Coordination

The Water Services Division has sent employee's to table top exercises, monthly tailgate meetings, associated classes through WW related organizations such as CWEA, First Responder and Haz Woper training that all include SOP's.

G. Spill Mitigation and Containment Procedure

The Water Services Division has written an Overflow emergency response plan and has created a Standard Operating Procedure (SOP) for spill mitigation and containment plan that is described in Figure 6-2 SSO Procedures Flow Chart.

H. Appendix F - Overflow Emergency Response Plan Documents

Appendix F includes the following:

F-1	Sanitary Sewer Overflow Response Plan
F-2	Water Service Division Required Training
F-3	Water Service Division Recommended Training -Tail Gate Meeting
F-4	Standard Operating Procedures (SOP) for Spill Mitigation and Containment

SECTION 7 - FOG CONTROL PROGRAM

NOTE: In accordance with State Order No. 2006-0003-DWQ , this plan is intended to be an internal working document that will continually evolve to further improve operations and reduce **SSO's.** The red text in this plan reflects elements that are required by the order, however, implementation dates for the elements are left to the discretion of the agency. The proposed implementation dates are established in appendix **A-2**

A. WDR/SSMP – FOG Control Program Requirement

The WDR/SSMP Fog Control Program requirement specifies that each Enrollee shall evaluate its service area to determine whether a FOG control program is needed. If an Enrollee determines that a FOG program is not needed, the Enrollee must provide justification for why it is not needed. If FOG is found to be a problem, the Enrollee must prepare and implement a FOG source control program to reduce the amount of these substances discharged to the sanitary sewer system. This plan shall include the following as appropriate:

1 An implementation plan and schedule for a public education outreach program that promotes proper disposal of FOG;

2 A plan and schedule for the disposal of FOG generated within the sanitary sewer system service area. This may include a list of acceptable disposal facilities and/or additional facilities needed to adequately dispose of FOG generated within a sanitary sewer system service area;

3 The legal authority to prohibit discharges to the system and identify measures to prevent SSO's and blockages caused by FOG;

4 Requirements to install grease removal devices (such as traps or interceptors), design standards for the removal devices, maintenance requirements, Best Management Practice (BMP) requirements, record keeping and reporting requirements;

5 Authority to inspect grease producing facilities, enforcement authorities, and whether the Enrollee has sufficient staff to inspect and enforce the FOG ordinance;

6 An identification of sanitary sewer system sections subject to FOG blockages and establishment of a cleaning maintenance schedule for each section; and

, Development and implementation of source control measures for all sources of FOG discharged to the sanitary sewer system for each section identified in (f) above.

B. Public Education Plan

The Water Services Division is initiating a FOG outreach program to residents, restaurants and the plumbing community on the proper disposal of FOG. This program will include TV spots, flyers direct mail and site visits to food service establishments.

Objective: Educate City of Lodi residents and restaurants on the proper disposal of FOG to meet or exceed outreach standards set forth in the State General WDR Requirements, and FOG Control Program adopted in May 2006.

Strategy: Conduct a multi-media public awareness and marketing campaign to meet objective by utilizing the following tactics (attached). Target audience is Lodi residents and restaurants.

The residential campaign uses a main message that is present on all ad and collateral pieces. Depending upon topic and audience segment, sub-messages will be tailored to fit with main message. All material will contain a web link reference (www.Lodi.ca.us/fog) to direct audience members to more information.

The restaurant campaign will incorporate more technical and specific information needed to comply with WDR. The messages in this campaign will be distributed directly (direct targeted mailing and/or site visits) as this audience segment is less voluntary than the residential segment (i.e. restaurants are obligated to comply and enforcement is easier in cases of non-compliance, whereas the residential audience is harder to reach and we are relying on them to incorporate behavioral changes to help comply with WDR).

C. FOG Disposal Plan

The Water Services Division has created the following FOG disposal plan:

The Permittee shall be required to keep all manifests, receipts and invoices of all cleaning, maintenance, grease removal of/from the grease control device, disposal carrier and disposal site location for no less than three years.

D. Record Keeping Requirements

The Water Services Division has created the following record keeping requirements:

The Permittee shall, upon request, make the manifests, receipts and invoices available to any City/District representative, or inspector. The minimum records requirements are 1, 2, and 3 below and may include 4, 5, and 6:

1. **A** logbook of grease interceptor, grease trap or grease control device cleaning and maintenance practices.

2. Copies of records and manifests of waste hauling interceptor contents.

3. Records of sampling data and sludge height monitoring for FOG and solids accumulation in the grease interceptor.

4. A record of Best Management Practices being implemented including employee training.
5. Records of any spills and/or cleaning of the lateral or sewer system.
6. Any other information deemed appropriate by the Public Works Director/Water Services Manager etc. to ensure compliance with these regulations.

E. Legal Authority to Prohibit SSO's and Blockages Caused by FOG Discharges

Municipal code section 13.12.115 provides the following authority to establish grease interceptor requirements:

> Grease, oil and sand interceptors shall be provided by the discharger when they are necessary for the proper handling of wastes containing grease in excess of one hundred fifty milligrams per liter of animal and vegetable origin and fifty milligrams per liter of mineral origin, or any flammable wastes, sand, grit and other harmful ingredients. All interceptors shall be of a type and capacity approved in writing, prior to installation, by the public works director, and shall be located so as to be readily and easily accessible for cleaning and inspection. Grease and oil interceptors shall be constructed of impervious materials capable of withstanding abrupt and extreme changes in temperature. They shall be of substantial construction, watertight, usually a minimum of one thousand gallons and equipped with easily removable covers which, when bolted in place, are gastight and watertight. Grease and/or oil/sand interceptors shall be constructed in any place or building having a capacity to serve group meals or commercial and industrial cleaning facilities. Where installed, all grease, oil, sand and grit interceptors shall be maintained by the owners at owner's expense in continuous efficient operation at all times. Materials collected shall not be reintroduced into the sewerage system. Records of all maintenance, cleaning and hauling of materials shall be maintained by the owner and such records shall be available at all times for inspection by city personnel. (Ord. 1613 (part), 1995)

F. BMP, Grease Removal Devices, Recordkeeping, and Reporting Requirements

The Water Services Division has included the following FOG BMP's, removal device, record keeping, and reporting requirements in the proposed addendum:

Requirements for BMP's:

All FSE's shall implement BMP's in accordance with the requirements and guidelines established by the City under its FOG Control Program in an effort to minimize the discharge of FOG to the sewer system.

All FSE's shall be required, at a minimum, to comply with the BMP's set forth in the terms and conditions of the FOG WDP.

Grease Interceptor Requirements:

All FSE's shall provide wastewater acceptable to the City, under the requirements and standards established herein before discharging to any public sewer. Any FSE required providing FOG pretreatment

shall install, operate, and maintain an approved type and adequately sized grease interceptor necessary to maintain compliance with the objectives of this Ordinance.

Grease interceptor sizing and installation shall conform to the current edition of the Uniform Plumbing Code. Grease interceptors shall be constructed in accordance with the design approved by the City Engineer and shall have a minimum of two compartments with fittings designed for grease retention.

The grease interceptor shall be installed at a location where it shall be at all times easily accessible for inspection, cleaning, and removal of accumulated grease.

Access manholes, with a minimum diameter of 24 inches, shall be provided over each grease interceptor chamber and sanitary tee. The access manholes shall extend at least to finished grade and be designed and maintained to prevent water I/I. The manholes shall also have readily removable covers to facilitate inspection, grease removal, and wastewater sampling activities.

Specific record keeping requirements are specified in 7.6 record keeping and reporting requirements.

G. Inspection and Enforcement Authority – FOG Producers

The Lab/Industrial Waste Division has included the following criteria in the proposed addendum:

1. All FSE's proposing to discharge or currently discharging wastewater containing FOG into the City's sewer system shall obtain a FOG WDP from the City.

2. FOG WDR's shall be expressly subject to all provisions of this Ordinance and all other regulations, charges for use, and fees established by the City. The conditions of FOG WDR's shall be enforced by the City in accordance with this Ordinance and applicable State and Federal Regulations.

H. FOG Characterization Assessment and Hot Spot Cleaning Schedule

The Water Services Division has completed a FOG characterization assessment and has established the following hot spot cleaning schedule:

The Water Services Division identified all of the commercial and industrial FOG dischargers within their jurisdictional boundaries during the SSMP preparedness review/audit and listed them in the data collection form. FOG data is form Appendix G.

FOG hot spot location data is maintained in the Water Services Division's CMMS and quarterly, semi-annual and annual sewer line maintenance work orders are issued and completed to ensure that hot spot lines do have grease blockages/SSO's between cleaning schedules.

I. FOG Control Program Measures

The Water Services Division has established the following FOG Waste Discharge Permit (WDP) Conditions in the proposed addendum:

The issuance of a FOG WDP may contain any of the following conditions or limits:

1. Limits on discharge of FOG and other priority pollutants.
2. Requirements for proper O&M of grease interceptors and other grease control devices.
3. Grease interceptor maintenance frequency and schedule.
4. Requirements for implementation of BMP's.
5. Requirements for maintaining and reporting status of BMP's.
6. Requirements for maintaining and submitting logs and records, including waste-hauling records and waste manifests.
7. Requirements to self-monitor.
8. Requirements for the FSE to construct, operate and maintain, at its own expense, FOG control device, and sampling facilities.
9. Additional requirements as otherwise determined to be reasonably appropriate by the Public Works Director to protect the City's system or as specified by other Regulatory Agencies.
10. Other terms and conditions, which may be reasonably applicable to ensure compliance with this ordinance.

J. Appendix G – FOG Control Program Document

Appendix G includes the following:

G-1 Fats, Oils, and Grease (FOG) Characterization Data Form

G-2 Proposed Addendum to Lodi Municipal Code - Food Service Establishments (FSE's)

G-3 Hot Spot Cleaning Schedule

SECTION 8 - SYSTEM EVALUATION, CAPACITY, AND ASSURANCE PLAN

NOTE: In accordance with State Order No. **2006-0003-DWQ** , this plan is intended to be an internal working document that will continually evolve to further improve operations and reduce **SSO's.** The red text in this plan reflects elements that are required by the order, however, implementation dates for the elements are left to the discretion of the agency. The proposed implementation dates are established in appendix **A-2**

A. WDR/SSMP - System Evaluation and Capacity Assurance Plan Requirement

The WDR/SSMP System Evaluation and Capacity Assurance Plan requirement specifies that each Enrollee shall prepare and implement a capital improvement plan (CIP) that will provide hydraulic capacity of key sanitary sewer system elements for dry weather peak flow conditions, as well as the appropriate design storm or wet weather event. At a minimum, the plan must include:

1. **Evaluation:** Actions needed to evaluate those portions of the sanitary sewer system that are experiencing or contributing to an SSO discharge caused by hydraulic deficiency. The evaluation must provide estimates of peak flows (including flows from SSO's that escape from the system) associated with conditions similar to those causing overflow events, estimates of the capacity of key system components, hydraulic deficiencies (including components of the system with limiting capacity) and the major sources that contribute to the peak flows associated with overflow events;

2. **Design Criteria:** Where design criteria do not exist or are deficient, undertake the evaluation identified in (a) above to establish appropriate design criteria; and

3. **Capacity Enhancement Measures:** The steps needed to establish a short- and long-term CIP to address identified hydraulic deficiencies, including prioritization, alternatives analysis, and schedules. The CIP may include increases in pipe size, I/I reduction programs, increases and redundancy in pumping capacity, and storage facilities. The CIP shall include an implementation schedule and shall identify sources of funding.

4. **Schedule:** The Enrollee shall develop a schedule of completion dates for all portions of the CIP developed in a thru c above. This schedule shall be reviewed and updated consistent with the SSMP review and update requirements as described in Section D. 14.

B. Evaluation Process - Capacity Enhancement Projects

The Water Services Division has performed the following capacity enhancement projects: *

C. Design Criteria

The Water Services Division has established and implemented the following design criteria:

The City of Lodi Standard Plans 300 series for wastewater.

The City of Lodi Construction Specifications.

The City of Lodi Public Improvement Design Standards

D. Capacity Enhancement Measurers

The Water Services Division has established the following capacity enhancement measures: *

E. Capital Improvement Program Schedule

The Water Services Division has established and implemented the following CIP schedule: *

F. Appendix H - System Evaluation and Capacity Assurance Plan Documents

Appendix H includes the following:

H-1	Technical Memorandum-SSMP Audit System Evaluation and Capacity Assurance Plan
H-2	Technical Memorandum-Trunk Sewer Hydraulic Analysis
H-4	Wastewater Condition Assessment Date – Power point Presentation
H-5	Capital Improvement Plan (CIP) Lodi Wastewater Collection System Condition Assessment
H-6	2009 Wastewater Capacity Study

* Note: **As** of August 2009 City Staff has completed the capacity assurance modeling work and is in the process of identifying projects that will reduce potential SSO's

SECTION 9 - MONITORING, MEASUREMENT, AND PROGRAM MODIFICATION

NOTE: In accordance with State Order No. 2006-0003-DWQ , this plan is intended to be an internal working document that will continually evolve to further improve operations and reduce SSO's. The red text in this plan reflects elements that are required by the order, however, implementation dates for the elements are left to the discretion of the agency. The proposed implementation dates are established in appendix **A-2**

A. WDR/SSMP – Monitoring, Measurement, and Program Modification Requirement

The WDR/SSMP Monitoring, Measurement, and Program Modification requirement specifies that each Enrollee shall do the following:

1. Maintain relevant information that can be used to establish and prioritize appropriate SSMP activities;
2. Monitor the implementation and, where appropriate, measure the effectiveness of each element of the SSMP;
3. Assess the success of the preventative maintenance program;
4. Update program elements, as appropriate, based on monitoring or performance evaluations; and
5. Identify and illustrate SSO trends, including: frequency, location, and volume.

B. Utility Metrics to Prioritize SSMP Activities

The Water Services Division has established the following Utility metrics:

The Water Services Division has established four categories of metrics to monitor and measure the effectiveness of the various elements of this **SSMP** and its success in terms of meeting its goals. Those metrics include the following categories of metric information:

1. System Information: Number of SSO's/100 miles **of** pipe, Miles of WW lines cleaned monthly and annually, Miles of WW lines televised monthly and annually.
2. Financial Information
3. Sewer Maintenance

4. Performance Measures

C. Metrics to Monitor Effectiveness of SSMP

The Water Services Division has established the following SSMP implementation schedule:

The Water Services Division Division's SSMP implementation schedule assigns individual staff responsibility for each SSMP element and defines the frequency that each element must be monitored and updated to ensure that the goals of this SSMP are achieved. This schedule is included in Appendix I.

D. Metrics to Assess Preventative Maintenance Program

The Water Services Division has established the following preventative maintenance sewer metrics:

The Water Services Division uses sewer maintenance metrics to monitor and measure and adjust maintenance program activities. These metrics are maintained in the CMMS and monitored on a monthly, quarterly, semi-annual, and annual basis. The goal of the Water Services Division is to reduce the number and volume of SSO's identified in Table 1 of the Historical Summary of Sanitary Sewer Overflows in Appendix 1-3. The sewer maintenance measures include the following metrics and the performance measures identified in 9.6 SSO Trends-Frequency, Location, and Volume.

Total miles cleaned per year	miles
Total miles visually inspected per year (not CCTV)	miles
Independent manhole inspections	How often
Total miles treated with chemicals for roots per year	miles
Total miles of mechanical root control	miles
Total miles CCTV inspected per year	miles
Total number of sewer maintenance field staff	#
Average high velocity cleaning per crew per day	feet
Average cost of sewer mechanical cleaning	$/ft Loader rates
Average cost of chemical root treatment	$/ft
Average cost of CCTV	$/ft

E. SSMP Performance Monitoring and Update Process

The Water Services Division has established the following monitoring process:

The Water Services Division uses performance metrics to monitor and measure and adjust maintenance program activities. These metrics are maintained the CMMS and monitored on a monthly, quarterly, semi-annual and annual basis. The performance measures include the following:

The Water Services Division Division's SSMP implementation schedule assigns individual staff responsibility for each SSMP element and defines the frequency that each element must be monitored and updated to ensure that the goals of this SSMP are achieved.

F. SSO Trends – Frequency, Location and Volume

The Water Services Division has established the following performance monitoring process:

The Water Services Division uses performance metrics to monitor and measure and adjust maintenance program activities. These metrics are maintained the CMMS and monitored on a monthly, quarterly, semi-annual and annual basis. The performance measures include the following:

Total number of spills per year (all spills)	Spills
Total volume of spills per year (all spills)	Gallons min/max
Total number of wet weather spills per year	Spills
Total volume of wet weather spills per year	Gallons
% Spills caused by FOG and volume	%
% Spills Caused by Roots and volume	%
% Spills Caused by Vandalism and volume	%
% Spills repeated within 2 years	%
Customer service requests per year, actionable/responsible for	Total # SR
Total number of sewer caused odor complaints	Complaints
Total # of Pump/Lift Station Failures per year (cause overflow)	Failures
Total number of pipe failures per year (cause overflow)	Breaks
Average response time, goal verses actual	Minutes
Number of claims per year, flooding	Claims
Total cost of claims per year	$
Total work orders performed per year	Word orders
% of work orders completed, emergency or corrective	%Emergency %corrective
% of work orders completed that are preventable	%

Total miles repaired as emergency per year	miles
Total miles rehabilitated or replaced per year	miles
Total new miles constructed per year	miles

G. Appendix I - Monitoring, Measurement, and Program Modifications Documents

Appendix I includes the following:

I-1 Water Services Division SSMP Implementation Schedule

1-2 Water Services Division Fiscal Year System Information, Financial Information, Sewer Maintenance and Performance Measures

3 Historical Summary of Sanitary Sewer System Overflows

SECTION 10 - PROGRAM AUDIT AND ANNUAL REPORT

NOTE: In accordance with State Order No. **2006-0003-DWQ** , this plan is intended to be an internal working document that will continually evolve to further improve operations and reduce SSO's. The red text in this plan reflects elements that are required by the order, however, implementation dates for the elements are left to the discretion of the agency. The proposed implementation dates are established in appendix A-2

A. WDR/SSMP - SSMP Program Audits Requirement

The WDR/SSMP - SSMP Program Audits requirement specifies that each Enrollee shall conduct periodic internal audits, appropriate to the size of the system and the number of SSO's. At **a** minimum, these audits must occur every two years and a report must be prepared and kept on file. This audit shall focus on evaluating the effectiveness of the SSMP and the Enrollee's compliance with the SSMP requirements identified in this subsection (D.13), including identification of any deficiencies in the SSMP and steps to correct them.

B. Audit Procedures, Roles and Responsibilities

The Water Services Division has established the following audit procedure:

The Water Services Manager will perform periodic internal audits to determine the effectiveness of each element of the SSMP.

The Water/Wastewater Superintendent will generate the following information and system metrics on a monthly, quarterly, semi-annually, and annually for the purpose of tracking, monitoring and adjusting the performance of the SSMP activities.

1. System Information
2. Financial Information
3. Sewer Maintenance
4. Performance Measures

A primary focus in the evaluation of Water Services Division information and system metrics will be the elimination of preventable SSO and reduction of the impact of those SSO's that do occur.

The Water Services Division audit schedule is as follows:

1. Annually for the first two years following the adoption and approval of this SSMP.

2. Every two years thereafter the adoption and approval of this SSMP

3. This SSMP will be updated every five years from the date of adoption and approval and will include all significant program changes that have occurred following the last City Council certification/approval.

C. SSMP Program Modification/Update Process

The Water Services Division has established the following program modification and update process:

The Water Services Division will monitor and review sewer performance metrics on a monthly basis and the status of each element of the SSMP on an annual basis for the first two years following the adoption of this SSMP. Formal *SSMP* audits will be conducted every two years following the adoption of this *SSMP*. The Waster Services Manager will initiate/direct corrective action to be taken when and if SSMP deficiencies are identified between/during periodic internal audits.

When significant changes are made to the SSMP that require re-certification, the Water/Wastewater Superintendent will enter the data in the online SSO database and mail the form to the State Water Board.

D. Appendix J - SSMP Program Audit Documents

Appendix J includes the following:

J-1 Procedures for Audit Form

J-2 Audit Form

SECTION 11 - COMMUNICATION PROGRAM

NOTE: In accordance with State Order No. **2006-0003-DWQ** , this plan is intended to be an internal working document that will continually evolve to further improve operations and reduce SSO's. The red text in this plan reflects elements that are required by the order, however, implementation dates for the elements are left to the discretion of the agency. The proposed implementation dates are established in appendix **A-2**

A. WDR/SSMP - Communication Program Requirement

The WDWSSMP Communication Program requirement specifies that each Enrollee shall communicate on a regular basis with the public on the development, implementation, and performance of its SSMP. The communication system shall provide the public the opportunity to provide input to the Enrollee as the program is developed and implemented.

The Enrollee shall also create a plan of communication with systems that are tributary and/or satellite to the Enrollee's sanitary sewer system.

This element requires that the City/Agency establish a program to communicate with the public and tributary/satellite systems on the development, implementation and performance of this SSMP. The program must provide a means for public input and feedback regarding the status of the City/Agency's SSMP. As part of the communication program the final SSMP must be approved by the City/Agency's City Council at a public meeting.

B. Internal Communication – Staff, Utility Commission, and City Council etc.

The Water Services Division has created the following power point presentations to educate the City Council, Public, and Staff:

The Water Services Division has created two power point presentations to introduce the SWRCB WDWSSMP requirements and the City of Lodi's responsibility to comply with the Statewide WDR Order No. 2006-0003. The Water Services Division's WDR awareness program is an overview for staff and the Sanitary Sewer Systems Regulations/WDR power point presentation is used to educate the City Council and the public as needed.

C. Stakeholder Communication – Residential, Commercial and Industrial

The Water Services Division has created the following SSMP educational material for public outreach:

The City of Lodi publishes a newsletter every two months to communicate with customers and stakeholders about sewer utilities. It is distributed in the utility bills and posted on the City's website. The Water Services Division is expanding use of the City's web-site to present WDR/SSMP requirements and program status to residential, commercial, industrial and public stakeholders. Sample newsletters are included in Appendix K.

The Water Services Division is initiating a comprehensive FOG outreach program to residents, restaurants and the plumbing community on the proper disposal of FOG. This program will include television spots, flyers direct mail and site visits to food service establishments.

D. Appendix K - Communication Program Documents

Appendix K includes the following:

- K-1 Water Services Division WDR Awareness Program Power point Presentation
- K-2 Sanitary Sewer Systems Regulations/Waste Discharge Requirement Power point Presentation (City Council)
- **K-3** Two Newsletters Preventing FOG in the Pipes and Not Flushing Medications Down the Sewer
- **K-4** FOG Outreach Program - Marketing Objective and Strategy

LIMITATIONS

Report Limitations

This document was prepared solely for the City of Lodi in accordance with professional standards at the time the services were performed and in accordance with the contract between the City of Lodi and Holmes International dated September 26,2007.

We have relied on information or instructions provided by the City of Lodi and other parties and, unless otherwise expressly indicated, have made no independent investigation as to the validity, completeness, or accuracy of such information.

APPENDIX A

SSMP Development Plan and Schedule

Appendix A includes the following:

A-1 Lodi's SSMP Development Plan and Implementation Schedule

A-2 Lodi's SSMP Implementation Schedule

APPENDIX B

Organization Documents

Appendix B includes the following:

B-1 **Contact List -Personnel Responsible for SSMP Elements**

B-2 **Contact List - Personnel Responsible for SSO Reporting**

B-3 **Contact List –Personnel Responsible for Responding to SSOs Weekly Standby**

APPENDIX C

Legal Authority Documents

Appendix C includes the following:

C-1 Pretreatment Program Enforcement Response Plan - TOC
C-2 Municipal Codes
C-3 Sanitary Sewer Design
C-4 Sanitary Sewer System Construction
C-5 Joint Exercise of Powers Agreement
C-6 City and City Inter-Agency agreement

APPENDIX D

Operation and Maintenance Program Documents

Appendix D includes the following:

D-1 City of Lodi Sewer Map Grid System

D-2 Maintenance Cleaning Schedule

D-3 Closed Circuit Television Video Report

D-4 Standard Operating Procedure (SOP)

D-5 CWEA Certification Handbook

D-6 Equipment Inventory List

D-7 Critical Replace Parts List (to be included at a later date)

D-8 Technical Memorandum O&M Program *SSMP* Audit-Rehabilitation and Replacement Plan

APPENDIX E

Design and Performance Provisions Documents

Appendix E includes the following:

E-1 Sanitary Sewer Design Standards

E-2 Sanitary Sewer System Construction Standards

E-3 Standard Plans

E-4 Technical Memorandum, SSMP Preparedness Audit Design and Performance Provisions

APPENDIX F

Overflow Emergency Response Documents

Appendix F includes the following:

F-1 Sanitary Sewer Overflow Response Plan

F-2 Water Service Division Required Training

F-3 Water Service Division Recommended Training -Tail Gate Meeting

F-4 Standard Operating Procedures (SOP) for Spill Mitigation and Containment

FOG Control Program Documents

Appendix G includes the following:

G-1 Fats, Oils, and Grease (FOG) Characterization Data Form

G-2 Addendum to Lodi Municipal Code - Section Blank.xxx Discharges of Fats, Oils, and Grease from Food Service Establishments (FSEs)

G-3 Hot Spot Cleaning Schedule

APPENDIX H

System Evaluation and Capacity Assurance Plan Documents

Appendix H includes the following:

H-1 Technical Memorandum-SSMP Audit System Evaluation and Capacity Assurance Plan

H-2 Technical Memorandum-Trunk Sewer Hydraulic Analysis

H-4 Wastewater Condition Assessment Date – Power point Presentation

H-5 Capital Improvement Plan (CIP) Lodi Wastewater Collection System Condition Assessment

H-6 2009 Wastewater Capacity Study

APPENDIX I

Monitoring, Measurement, and Program Modifications Documents

Appendix I includes the following:

I-1 Water Service Division SSMP Implementation Schedule

1-2 Water Service Division Fiscal Year System Information, Financial Information, Sewer Maintenance, and Performance Measures

1-3 Historical Summary of Sanitary Sewer System Overflows

APPENDIX J

SSMP Program Audit Documents

Appendix J includes the following:

J-1 **Procedure for Audit** Form

J-2 **Audit** Form

APPENDIX K

Communication Program Documents

Appendix K includes the following:

K-1 **Water Service Division WDR Awareness Program PowerPoint Presentation**

K-2 **Sanitary Sewer Systems** Regulations/Waste **Discharge Requirement PowerPoint Presentation (Governing** Board/PUC/City **Council)**

K-3 Two **Newsletters Preventing** FOG **in the Pipes and Not Flushing Medications Down the Sewer**

K-4 FOG **Outreach Program - Marketing Objective and Strategy**

APPENDIX A

SSMP Development Plan and Schedule

Appendix **A** includes the following:

A-1 Lodi's SSMP Development Plan and Implementation Schedule

A-2 Lodi's SSMP Implementation Schedule

City of Lodi SSMP Work Plan and Schedule

The Sewer System Management Plan, also called an SSMP, work plan and schedule is developed to support the City's SSMP goals and strategies. The work plan is a detailed tactical action plan with activities, schedules, and resources to implement the SSMP. The SSMP work plan and schedule is also one the first required deliverables to comply with the Statewide General Waste Discharge Requirements (GWDRs) for Sanitary Sewer Systems, Water Quality Order No. 2006-0003 (Sanitary Sewer Order) adopted by State Water Resources Control Board (SWRCB) on May 2,2006.

Goals

Table 1 presents the plan for meeting the GWDR requirements for the SSMP Goals.

Table 1 - Goals

Activities	Due	Responsible
Formally adopt SSMP goals to provide a plan and schedule to properly manage, operate, and maintain all parts of the sanitary sewer system to help reduce and prevent *SSOs* as well as mitigate any SSOs that do occur	11/02/07	K. Gaither

Organization

Table 2 presents the plan for meeting the GWDR requirements for the Organization.

The Public Works Department has the primary responsibility for compliance with the state order. The Public Works Director is Richard Prima; the tasks associated with the compliance are shared between the Water Services Division and the Engineering Division. The manger for the Water Services Division is Charles E Swimley Jr.; the Manager for the Engineering Division is F. Wally Sandelin; the superintendent for the Water Services Division is Vacant. Kevin Gaither is the Water Services Technician and is assigned as the project manager for the development of the Sanitary Sewer Management Plan (SSMP).

Table 2 - Organization

Activities	Due	Responsible
Identify the name of the responsible or authorized representative	11/02/07	K. Gaither

Identify the names and telephone numbers for management, administrative, and maintenance positions responsible for implementing specific measures in the SSMP program	11/02/07	K. Gaither
Identify the chain of communication for reporting SSOs, from receipt of a complaint or other information, including the person responsible for reporting SSOs to the State and Regional Water Board and other agencies	11/02/07	K. Gaither

Legal Authority

Table **3** presents the plan for meeting the GWDR requirements for the Legal Authority.

Table 3 – Legal Authority

Activities	Due	Responsible
Demonstrate through the municipal ordinance that the City possesses the necessary legal authority to prevent illicit discharges into its sanitary sewer system	5/02/09	K. Gaither
Demonstrate through the municipal ordinance that the City possesses the necessary legal authority to require that sewers and connections be properly designed and constructed;	5/02/09	K. Gaither
Demonstrate through the municipal ordinance that the City possesses the necessary legal authority to ensure access for maintenance, inspection, or repairs for portions of the lateral owned or maintained by the Public Agency;	5/02/09	K. Gaither
Demonstrate through the municipal ordinance that the City possesses the necessary legal authority to limit the discharge of fats, oils, and grease and other debris that may cause blockages, and	5/02/09	K. Gaither
Demonstrate through the municipal ordinance that the City possesses the necessary legal authority to enforce any violation of its sewer ordinances	5/02/09	K. Gaither

Operation and Maintenance Program

Table 4 presents the plan for meeting the GWDR requirements for the Operation and Maintenance Program.

Table 4 – Operation and Maintenance Program

Activities	Due	Responsible
Include an up-to-date map of the sanitary sewer system	5/02/09	W. Sandelin
Describe routine preventive operation and maintenance activities by staff and contractors	5/02/09	K. Gaither
Develop a rehabilitation and replacement plan to identify and prioritize system deficiencies and implement short-term and long-term rehabilitation actions to address each deficiency including regular visual and TV inspections of manholes and sewer pipes	5/02/09	K. Gaither
Provide training on a regular basis for staff in sanitary sewer system operations and maintenance	5/02/09	K. Gaither
Provide equipment and replacement part inventories	5/02/09	K. Gaither

Design and Performance Provisions

Table 5 presents the plan for meeting the GWDR requirements for the Design and Performance Provisions.

Table 5 – Design and Performance Provisions

Activities	Due	Responsible
Document design and construction standards and specifications for the installation of new sanitary sewer systems	8/02/09	W. Sandelin
Document procedures and standards for inspecting and testing the installation of new sewers	8/02/09	W. Sandelin

Overflow Emergency Response Plan (OERP)

Table *6* presents the plan for meeting the GWDR requirements for the Overflow Emergency Response Plan.

Table 6 – Overflow Emergency Response Plan

Activities	Due	Responsible
Document that the Overflow Emergency Response Plan (OERP) contains proper notification procedures so that the primary responders and regulatory agencies are informed of all SSOs in a timely manner	5/02/09	K. Gaither
Document that the OERP contains a program to ensure an appropriate response to all overflows;	5/02/09	K. Gaither
Document that the OERP contains procedures to ensure prompt notification to appropriate regulatory agencies and other potentially affected entities of all SSOs that potentially affect public health or reach the waters of the State in accordance with the GWDR Monitoring and Reporting Program (MRP). Document that the OERP identifies the officials who will receive immediate notification	5/02/09	K. Gaither
Document that the OERP contains procedures to ensure that appropriate staff and contractor personnel are aware of and follow the OERP and are appropriately trained	5/02/09	K. Gaither
Document that the OERP contains procedures to address emergency operations such as traffic and crowd control	5/02/09	K. Gaither
Document that the OERP contains a program to ensure that all reasonable steps are taken to contain and prevent the discharge of untreated and partially treated wastewater to waters of the United States and to minimize or correct any adverse impact on the environment resulting from the SSOs, including such accelerated or additional monitoring as may be necessary to determine the nature and impact of the discharge	5/02/09	K. Gaither

Fats, Oils, and Grease (FOG) Control Program

Table 7 presents the plan for meeting the GWDR requirements for the FOG Control Program.

Table 7 – FOG Control Program

Activities	Due	Responsible
Evaluate the City's service area to determine whether a FOG control program is needed. If FOG is found to be a problem, prepare and implement a FOG source control program to reduce the amount of these substances discharged to the sanitary sewer system. This plan shall include the following	5/02/09	K. Gaither

as appropriate		
• An implementation plan and schedule for a public education outreach program that promotes proper disposal of FOG	5/02/09	K. Gaither
• A plan and schedule for the disposal of FOG generated within the sanitary sewer system service area	5/02/09	K. Gaither
• The legal authority to prohibit discharges to the system and identify measures to prevent SSOs and blockages caused by FOG	5/02/09	K. Gaither
• Requirements to install grease removal devices, design standards for the removal devices, maintenance requirements, BMP requirements, record keeping and reporting requirements	5/02/09	K. Gaither
• Authority to inspect grease producing facilities, enforcement authorities and sufficient staff to inspect and enforce the FOG ordinance	5/02/09	K. Gaither
• Identification of sanitary sewer system sections subject to FOG blockages and establishment of a cleaning maintenance schedule for each section	5/02/09	K. Gaither
• Development and implementation of source control measures for all sources of FOG discharged to the sanitary sewer system	5/02/09	K. Gaither

System Evaluation and Capacity Assurance Plan

Table 8 presents the plan for meeting the GWDR requirements for the System Evaluation and Capacity Assurance Plan.

Table 8 – System Evaluation and Capacity Assurance Plan

Activities	Due	Responsible
Prepare and implement a capital improvement plan (CIP) that will provide hydraulic capacity of key sanitary sewer system elements for dry weather peak flow conditions, as well as the appropriate design storm or wet weather event. At a minimum, the plan must include:	8/02/09	W. Sandelin
• **Evaluation:** Actions needed to evaluate those portions of	8/02/09	W. Sandelin

the sanitary sewer system that are experiencing or contributing to an SSO discharge caused by hydraulic deficiency		
• **Design Criteria:** Where design criteria do not exist or are deficient, undertake the evaluation identified above to establish appropriate design criteria	8/02/09	W. Sandelin
• **Capacity Enhancement Measures:** Establish a short- and long-term CIP to address identified hydraulic deficiencies, including prioritization, alternatives analysis, and schedules. The CIP shall include an implementation schedule and shall identify sources of funding.	8/02/09	W. Sandelin
• **Schedule:** Develop a schedule of completion dates for all portions of the capital improvement program.	8/02/09	W. Sandelin

Monitoring, Measurement, and Program Modifications

Table 9 presents the plan for meeting the GWDR requirements for the Monitoring, Measurement, and Program Modifications.

Table 9 – Monitoring, Measurement, and Program Modifications

Activities	Due	Responsible
Develop and maintain relevant information that can be used to establish and prioritize appropriate SSMP activities	8/02/09	K. Gaither
Develop and monitor the implementation and, where appropriate, measure the effectiveness of each element of the SSMP	8/02/09	K. Gaither
Assess the success of the preventative maintenance program	8/02/09	K. Gaither
Update program elements, as appropriate, based on monitoring or performance evaluations	8/02/09	K. Gaither
Identify and illustrate SSO trends, including: frequency, location, and volume	8/02/09	K. Gaither

Program Audits

Table 10 presents the plan for meeting the GWDR requirements for the SSMP Program Audits.

Table 10 - Program Audits

Activities	Due	Responsible
Conduct periodic internal audits, appropriate to the size of the system and the number of SSOs. At a minimum, these audits must occur every two years and a report must be prepared and kept on file.	8/02/09	K. Gaither

Communication Program

Table 11 presents the plan for meeting the GWDR requirements for the Communication Program.

Table 11 - Communication Program

Activities	Due	Responsible
Communicate on a regular basis with the public on the development, implementation, and performance of its SSMP. The communication system shall provide the public the opportunity to provide input as the program is developed and implemented. Also create a plan of communication with systems that are tributary and/or satellite to the City's sanitary sewer system	8/02/09	K. Gaither

City of Lodi SSMP Implementation Schedule

The Sewer System Management Plan, also called an SSMP, implementation schedule is developed to support the City's SSMP goals. The implementation schedule is an action plan with activities, schedules, and resources estimated to implement the SSMP.

Goals

Table 1 presents the plan for meeting the GWDR requirements for the SSMP Goals.

Table 1 - Goals

Activities	Plan Date	Responsible
Formally adopt SSMP goals to provide a plan and schedule to properly manage, operate, and maintain all parts of the sanitary sewer system to help reduce and prevent SSOs as well as mitigate any SSOs that do occur	11/02/07	K. Gaither

Organization

Table **2** presents the plan for meeting the GWDR requirements for the Organization.

The Public Works Department has the primary responsibility for compliance with the state order. The Public Works Director is Richard Prima; the tasks associated with the compliance are shared between the Water Services Division and the Engineering Division. The manger for the Water Services Division is Charles E Swimley Jr.; the Manager for the Engineering Division is F. Wally Sandelin; the superintendent for the Water Services Division is Vacant. Kevin Gaither is the Water Services Technician and is assigned as the project manager for the development of the Sanitary Sewer Management Plan (SSMP).

Table 2 - Organization

Activities	Plan Date	Responsible
Identify the name of the responsible or authorized representative	11/02/07	K. Gaither
Identify the names and telephone numbers for management, administrative, and maintenance positions responsible for implementing specific measures in the SSMP program	11/02/07	K. Gaither
Identify the chain of communication for reporting SSOs, from receipt of a complaint or other information, including the person responsible for reporting SSOs to the State and Regional Water Board and other agencies	11/02/07	K. Gaither

Legal Authority

Table 3 presents the plan for meeting the GWDR requirements for the Legal Authority.

Table 3 – Legal Authority

Activities	Plan Date	Responsible
Demonstrate through the municipal ordinance that the City possesses the necessary legal authority to prevent illicit discharges into its sanitary sewer system	5/02/09	K. Gaither
Demonstrate through the municipal ordinance that the City possesses the necessary legal authority to require that sewers and connections be properly designed and constructed;	5/02/09	K. Gaither
Demonstrate through the municipal ordinance that the City possesses the necessary legal authority to ensure access for maintenance, inspection, or repairs for portions of the lateral owned or maintained by the Public Agency;	5/02/09	K. Gaither
Demonstrate through the municipal ordinance that the City possesses the necessary legal authority to limit the discharge of fats, oils, and grease and other debris that may cause blockages, and	5/02/09	K. Gaither
Demonstrate through the municipal ordinance that the City possesses the necessary legal authority to enforce any violation of its sewer ordinances	5/02/09	K. Gaither

Operation and Maintenance Program

Table 4 presents the plan for meeting the GWDR requirements for the Operation and Maintenance Program.

Table 4 – Operation and Maintenance Program

Activities	Plan Date	Responsible
Include an up-to-date map of the sanitary sewer system	5/02/09	W. Sandelin
Describe routine preventive operation and maintenance activities by staff and contractors	5/02/09	K. Gaither
Develop a rehabilitation and replacement plan to identify and prioritize system deficiencies and implement short-term and long-term rehabilitation actions to address each deficiency including regular visual and TV inspections of manholes and sewer pipes	5/02/09	K. Gaither
Provide training on a regular basis for staff in sanitary sewer system operations and maintenance	5/02/09	K. Gaither
Provide equipment and replacement part inventories	5/02/09	K. Gaither

Design and Performance Provisions

Table 5 presents the plan for meeting the GWDR requirements for the Design and Performance Provisions.

Table 5 – Design and Performance Provisions

Activities	Plan Date	Responsible
Document design and construction standards and specifications for the installation of new sanitary sewer systems	8/02/09	W. Sandelin
Document procedures and standards for inspecting and testing the installation of new sewers	8/02/09	W. Sandelin

Overflow Emergency Response Plan (OERP)

Table 6 presents the plan for meeting the GWDR requirements for the Overflow Emergency Response Plan.

Table 6 – Overflow Emergency Response Plan

Activities	Plan Date	Responsible
Document that the Overflow Emergency Response Plan (OERP) contains proper notification procedures so that the primary responders and regulatory agencies are informed of all SSOs in a timely manner	5/02/09	K. Gaither
Document that the OERP contains a program to ensure an appropriate response to all overflows;	5/02/09	K. Gaither
Document that the OERP contains procedures to ensure prompt notification to appropriate regulatory agencies and other potentially affected entities of all SSOs that potentially affect public health or reach the waters of the State in accordance with the GWDR Monitoring and Reporting Program (MRP). Document that the OERP identifies the officials who will receive immediate notification	5/02/09	K. Gaither
Document that the OERP contains procedures to ensure that appropriate staff and contractor personnel are aware of and follow the OERP and are appropriately trained	5/02/09	K. Gaither
Document that the OERP contains procedures to address emergency operations such as traffic and crowd control	5/02/09	K. Gaither
Document that the OERP contains a program to ensure that all reasonable steps are taken to contain and prevent the discharge of untreated and partially treated wastewater to waters of the United States and to minimize or correct any adverse impact on the environment resulting from the SSOs, including such accelerated or additional monitoring as may be necessary to determine the nature and impact of the discharge	5/02/09	K. Gaither

Fats, Oils, and Grease (FOG) Control Program

Table 7 presents the plan for meeting the GWDR requirements for the FOG Control Program.

Table 7 – FOG Control Program

Activities	Plan Date	Responsible
Evaluate the City's service area to determine whether a FOG control program is needed. If FOG is found to be a problem, prepare and implement a FOG source control program to reduce the amount of these substances discharged to the sanitary sewer system. This plan shall include the following as appropriate	6/1/10	K. Gaither
• An implementation plan and schedule for a public education outreach program that promotes proper disposal of FOG	6/1/10	K. Gaither
• A plan and schedule for the disposal of FOG generated within the sanitary sewer system service area	6/1/10	K. Gaither
• The legal authority to prohibit discharges to the system and identify measures to prevent SSOs and blockages caused by FOG	6/1/10	K. Gaither
• Requirements to install grease removal devices, design standards for the removal devices, maintenance requirements, BMP requirements, record keeping and reporting requirements	6/1/10	K. Gaither
• Authority to inspect grease producing facilities, enforcement authorities and sufficient staff to inspect and enforce the FOG ordinance	6/1/10	K. Gaither
• Identification of sanitary sewer system sections subject to FOG blockages and establishment of a cleaning maintenance schedule for each section	6/1/10	K. Gaither
• Development and implementation of source control measures for all sources of FOG discharged to the sanitary sewer system	6/1/10	K. Gaither

System Evaluation and Capacity Assurance Plan

Table 8 presents the plan for meeting the GWDR requirements for the System Evaluation and Capacity Assurance Plan.

Table 8 – System Evaluation and Capacity Assurance Plan

Activities	Plan Date	Responsible
Prepare and implement a capital improvement plan (CIP) that will provide hydraulic capacity of key sanitary sewer system elements for dry weather peak flow conditions, as well as the appropriate design storm or wet weather event. At a minimum, the plan must include:	8/02/09	W. Sandelin
• **Evaluation:** Actions needed to evaluate those portions of the sanitary sewer system that are experiencing or contributing to an SSO discharge caused by hydraulic deficiency	8/02/09	W. Sandelin
• **Design Criteria:** Where design criteria do not exist or are deficient, undertake the evaluation identified above to establish appropriate design criteria	1/1/10	W. Sandelin
• **Capacity Enhancement Measures:** Establish a short- and long-term CIP to address identified hydraulic deficiencies, including prioritization, alternatives analysis, and schedules. The CIP shall include an implementation schedule and shall identify sources of funding.	3/1/10	W. Sandelin
• **Schedule:** Develop a schedule of completion dates for all portions of the capital improvement program.	3/1/10	W. Sandelin

Monitoring, Measurement, and Program Modifications

Table 9 presents the plan for meeting the GWDR requirements for the Monitoring, Measurement, and Program Modifications.

Table 9 – Monitoring, Measurement, and Program Modifications

Activities	Plan Date	Responsible
Develop and maintain relevant information that can be used to establish and prioritize appropriate SSMP activities	3/1/10	K. Gaither
Develop and monitor the implementation and, where appropriate, measure the effectiveness of each element of the SSMP	3/1/10	K. Gaither
Assess the success of the preventative maintenance program	3/1/10	K. Gaither
Update program elements, as appropriate, based on monitoring or performance evaluations	3/1/10	K. Gaither
Identify and illustrate SSO trends, including: frequency, location, and volume	3/1/10	K. Gaither

Program Audits

Table 10 presents the plan for meeting the GWDR requirements for the SSMP Program Audits.

Table 10 - Program Audits

Activities	Plan Date	Responsible
Conduct periodic internal audits, appropriate to the size of the system and the number of SSOs. At a minimum, these audits must occur every two years and a report must be prepared and kept on file.	6/1/10	K. Gaither

Communication Program

Table 11 presents the plan for meeting the GWDR requirements for the Communication Program.

Table 11 - Communication Program

Activities	Plan Date	Responsible
Communicate on a regular basis with the public on the development, implementation, and performance of its SSMP. The communication system shall provide the public the opportunity to provide input as the program is developed and implemented. Also create a plan of communication with systems that are tributary and/or satellite to the City's sanitary sewer system	1/1/10	K. Gaither

APPENDIX B

Organization Documents

Appendix B includes the following:

B-1 Contact List -Personnel Responsible for SSMP Elements

B-2 Contact List - Personnel Responsible for **SSO** Reporting

B-3 Contact List –Personnel Responsible for Responding to SSOs Weekly Standby

General Position Description - SSMP Responsibilities:

- City Council: The City Council is the elected governing board of the City. Members are elected "at-large" through regular elections. The city, a municipal corporation, consists of all the territory within the boundaries thereof, and all territory outside the boundaries thereof over which it has jurisdiction or control by virtue of any constitutional or statutory provision. The City Council is responsible for approving budgets and setting policy.
- City Manager: The City Manager has the responsibility of management of all City Departments and all hiring of personnel, and conducts the upper level management and business of the City.
- City Attorney: Receives policy direction from the City Council and acts as legal advisor and counsel to the City Council., City Manager, and City Departments and represents the City in litigation against the City.
- Public Works Director: The Public Works Director is responsible to plan, organize, direct, and review the activities and operations of the Public Works Department. This includes the following 2 utilities: Wastewater and Water, and other divisions: Engineering, Streets and Drainage, Fleet and Facilities Maintenance, Transportation, and Construction. The Public Works Director is the Legally Responsible Official (LRO) in the WDR.
- City Engineer/Deputy Public Works Director: The City Engineer is responsible for the Design and Performance standards and for the Capacity Assurance Plan
- Water Services Manager: Has overall responsibility for the management and oversight of the entire Water and WW Utilities. Oversees revenue and expenses, along with operation and maintenance of the Water Pollution Control Facility, Wastewater Collection System and Drinking Water System for the City. Has overall responsibility for the Sanitary Sewer Overflow Emergency Response Plan (SSORP), the FOG Control Program, Monitoring, Measurement, and Program Modifications, Periodic Audits, and the Communication Program. Overall responsibility for reporting SSOs to the State and Regional Water Board and other agencies when applicable.
- Water/Wastewater Superintendent: Overall responsibility for the operation and maintenance of the Water Utility and the Wastewater Collection System. As needed will report SSOs to the State and Regional Water Board and other agencies when applicable.
- Water Services Technician: Performs technical duties such as mapping, drafting, and data management. Has responsibility for reporting as assigned. As needed will report SSOs to the State and Regional Water Board and other agencies when applicable.
- Laboratory Services Supervisor: Oversees the water/wastewater laboratory activities and the environmental compliance program, and prepares regulatory compliance reports. As part of the industrial waste program, oversees the pretreatment and FOG inspection programs.
- Environmental Compliance Inspector: Ensures that the City's Industrial Pretreatment Program is in compliance with local, State and Federal requirements. Performs FOG related inspections.
- Water/Wastewater Supervisor: Is responsible for the day-to-day supervision of the WW Utility Maintenance Workers in the areas of Closed-Circuit Television (CCTV) and system cleaning. Ensures that written SSO and maintenance reports are completed.
- Water/Wastewater Maintenance Worker 111: Responsible to ensure that the crews carry out the work assigned to them by the Supervisor. Each of the following crews is assigned one or two Maintenance Workers: Construction, Service Maintenance, and Wastewater Clean/TV. As needed, will record field data for SSO reports.
- Water/Wastewater Maintenance Worker I and Maintenance Worker II -: Responsible to carry out tasks and duties assigned by the Water/Wastewater Maintenance Worker III. Performs the CCTV inspections and, sewer cleaning. As needed, will record field data for SSO reports.
- Senior Plant and Equipment Mechanic: Oversees the operation and maintenance of the sewer lift stations including inspections, routine maintenance, trouble shooting and repairs.

- Senior Plant and Equipment Mechanic: Operates and maintains of the sewer lift stations including inspections, routine maintenance, trouble shooting and repairs. As needed, will record field data for SSO reports.
- Utility Control Operator: Answers and dispatches customer calls, generates and closes out utility service reports.
- Administrative Support Staff: Answer and dispatch customer call as needed.

- City Manager: Blair King, 209-333-6700
- City Attorney: Stephen Schwabauer, 209-333-6701
- Public Works Director: 209-333-6706
- City Engineer/Deputy Public Works Director: F. Wally Sandelin, 209-333-6706
- Water Services Manager: Charles Swimley, 209-333-6740
- Water/Wastewater Superintendent: Frank Beeler, 209-333-6740 *
- Water Services Technician: Kevin Gaither, 209-333-6740
- Laboratory Services Supervisor: Michael Schafer, 209-333-6749
- Environmental Compliance Inspectors: Brian Longpre, Brian Bock, 209-333-6749
- Water/Wastewater Supervisors: Martin Jones, Richard Lenfestey, Chris Knoll, 209-333-6740 *
- Water/Wastewater Maintenance Worker 111: Dave Towne, Rodney Olsen, John Flores, Thomas Gabriel, Lester Smith, 209-333-6740 *
- Water/Wastewater Maintenance Worker I and Maintenance Worker II, Jason R. Burkland, David Delbarba, Nathan Shropshire, Thomas Rodriguez, 209-333-6740 *
- Senior Plant and Equipment Mechanic: Ronald Stawski, 209-333-6740 *
- Senior Plant and Equipment Mechanic: William Cooper, Jason A. Burkland, Ken Capitanich, John Croce, 209-333-6740 *
- Utility Control Operators: Abel Palacio (Supervisor), 209-368-5738, or 209-333-6767
- Administrative Support Staff: Diana Gonzales (Supervisor), 209-333-6740

* See attached call-out list for emergency numbers.

City of Lodi chain of communication for reporting an SSO

#1 all reports are received by Lodi control and relayed to the water services division.

Primary Staff member: Able Palecio Utility operations Supervisor
Backup staff member: Bob Anderson Utility Service operator II
Backup staff member: Pat Novinger Utility Service operator II
Backup staff member: Rod Brown Utility Service operator II
Backup staff member: Mark Verbiski Utility Service operator II

#2 Calls from Lodi control are received by water services division administrative staff.

Primary staff member: Diana Gonzales Office Supervisor
Backup staff member: Michelle Niemantsverdriet Senior Administrative Clerk
Backup staff member: Sharnay Moultre Administrative Clerk

#3 documented calls from administrative staff members are given to water supervisors:

Primary staff member: Martin Jones Water/Wastewater Supervisor
Backup staff: Richard Lindfestey Water/Wastewater Supervisor
Backup staff member: Chris Knoll Water/Wastewater Supervisor

#4 Calls from the administrative staff are dispatched by the supervisors to water/wastewater maintenance workers who respond to the spills and are responsible for documenting the initial spill report.

Primary staff members: All w/ww maintenance staff members are trained and respond to spills.
Back staff members: All w/ww maintenance staff members are trained and respond to spills

#5 initial reports are reviewed and signed by a water/wastewater supervisor and forwarded to the water/wastewater superintendent for the remainder of the reporting to all applicable state agencies except the on line reporting step. A copy of the finalized signed spill report is forwarded to the water services technician for the final posting to the states online reporting web site.

Primary staff member: Vacant Water/Wastewater Superintendent
Backup staff member: Kevin Gaither Water Services Technician
Backup staff member: Charlie Swimley Water Services Manager

CALLOUT LIST: WATER/WASTEWATER

WATER/WASTEWATER SERVICE

Name

JASON BURKLAND
DAVE DEL-BARBA
DAVE TOWNE
THOMAS RODRIGUEZ
CHRIS KNOLL
RON STAWSKI
KEN CAPITANICH
JOHN CROCE JR.
GEORGE DUNCAN
LESTER SMITH
RODNEY OLSEN
TOM GABRIEL
BOBBY BURKLAND
BILL COOPER
JOHN FLORES
NATHAN SHROPSHIRE

WATEROEASTEWATER TECH

Name

JASON BURKLAND
CHRIS KNOLL
RON STAWSKI
KEN CAPITANICH
JOHN CROCE JR.
BILL COOPER
RICHARD LENFESTEY
KELLY POWERS

WATER/WASTEWATER ASST

Name

JOSE FLORES
DOMINIC WILLIAMS
GEORGE AGNEW

APPENDIX C

Legal Authority Documents

Appendix **C** includes the following:

C-1 Pretreatment Program Enforcement Response Plan - TOC
c-2 Municipal Codes
c-3 Sanitary Sewer Design
c-4 Sanitary Sewer System Construction
C-5 Joint Exercise of Powers Agreement
C-6 City and City Inter-Agency agreement

ORDINANCE NO. 1501

AN ORDINANCE OF THE LODI CITY COUNCIL
REPEALING LODI MUNICIPAL CODE CHAPTER 13.12 - SEWER SERVICE -
AND REENACTING A NEW ORDINANCE RELATING TO SEWER SERVICE

BE IT ORDAINED BY THE LODI CITY COUNCIL AS FOLLOWS

SECTION 1. Lodi Municipal Code Chapter 13.12, Sewer Service, is repealed in its entirety and a new ordinance relating to sewer service is reenacted as follows:

Chapter 13.12
SEWER SERVICE

Sections:

Article I. General Provisions
13.12.010 Purpose and policy.
13.12.020 Definitions.

Article II. Discharge Restrictions
13.12.030 Prohibited discharges.
13.12.040 Storm drainage and groundwater.
13.12.050 Unpolluted water.
13.12.060 Septic tanks.
13.12.070 Radioactive wastes.
13.12.080 Garbage grinders.
13.12.090 Direct discharge-Use of service sewer.
13.12.100 Holding tank waste.
13.12.110 Restricted discharges.
13.12.115 Grease, oil, and sand interceptors.
13.12.120 Federal industrial requirements.
13.12.130 Industrial waste permits.
13.12.140 Other legal restrictions.
13.12.150 Connections outside city.
13.12.160 Screening of industrial waste.

Article 111. Service Charges and Connection Fees
13.12.170 Classification.
13.12.180 Domestic system service charges.
13.12.190 Domestic system connection fees.
13.12.200 Industrial system service charqes.
13.12.210 Industrial system connection fees.
13.12.215 Adjustments and additions.
13.12.220 Storm drain and cooling water service charges.
13.12. 225 Storm drainage impact fee.
13.12 230 Holding tank waste charges.
13.12 240 Charges and fees.
13.12 245 Schedule of charges and fees.
13.12 250 Billing and collections.
13.12 260 Appeals.

Article IV. Construction Generally.
13.12.270 Permit.
13.12.280 Design standards.
13.12.290 Application for service.

Article V. Extensions
13.12.300 Purpose.
13.12.310 Application.
13.12.320 Applicant's obligation.
13.12.330 Extension for full frontage width.
13.12.340 Minimum diameter.
13.12.350 Reimbursement-Application.

13.12.360 Reimbursement-Agreement.
13.12.370 Reimbursement-Oversize mains.
13.12.380 Reimbursement-City eligibility.
13.12.390 Reimbursement-Payment.
13.12.400 Reimbursement-Entitlement letter.
13.12.410 Reimbursement-Unclaimed.

Article VI. Administration
13.12.420 Discharge reports.
13.12.430 Discharge permit-Required.
13.12.440 Discharge permit-Optional.
13.12.450 Discharge permit-Application.
13.12.460 Discharge permit-Conditions.
13.12.470 Discharge permit-Term-Changes-Renewal.
13.12.480 Discharge permit-Transfer.
13.12.490 Discharge permit-Suspension.
13.12.500 Discharge permit-Revocation,
13.12.510 Monitoring facilities.
13.12.520 Inspection, sampling, monitoring and analysis,
13.12.530 Accidental discharge prevention.
13.12.540 Confidential information.
13.12.550 special agreements.

Article VII. Enforcement
13.12.560 Accidental discharge notice.
13.12.570 Cease and desist order.
13.12.580 Compliance timetable.
13.12.590 Appeals.
13.12.600 Liability.
13.12.610 Injunction.
13.12.620 Damage to sewerage system Charge.
13.12.630 Civil penalties.
13.12.640 Termination of service.
13.12.650 Public notice of violation.

Article I. General Provisions

13.12.010
Purpose and policy. These wastewater discharge regulations set uniform requirements for discharges of domestic, industrial waste and storm drainage water into the city sewerage system to enable the city to comply with the administrative provisions of the Clean Water Grant Regulations, water quality requirements set by the Regional Water Quality Control Board and the applicable effluent limitations, national standards of performance, toxic and pretreatment effluent standards, and any other discharge criteria which are required or authorized by state or federal law, and to derive the maximum public benefit by regulating the quality and quantity of wastewater discharged into those systems. (Priorcode § 20-1)

13.12.020

Definitions. Unless otherwise defined in this chapter, terms shall be as adopted in the latest edition of Standard Methods for the Examination of Water and Wastewater, published by the American Public Health Association, the American Water Works Association, and the Water Pollution Control Federation. Waste constituents and characteristics shall be measured by the approved methods as defined below. The following words shall have these meaning(s):

1. "Approved methods" means the analytical methods listed in the Federal Register 40 CFR Part 136, unless expressly stated, or as established by federal or state regulatory agencies.

2. "Bedroom(s)" means room(s) of a residential user designed or used primarily for sleeping purposes, as determined by the city, based on criteria such as those rooms having closets.

3. "Biochemical oxygen demand (BOD)" means the amount of dissolved oxygen required to meet the metabolic needs of aerobic microorganisms in water containing organic matter as determined by approved methods and, unless otherwise noted, exerted in a period of five days at twenty degrees Celsius.

4. "By-pass" means an intentional diversion of waste or wastewater from any portion of an industrial users treatment facility.

5. "Chemical oxygen demand (COD)" means the oxygen equivalent of that portion in a sample that is susceptible to oxidation by a strong chemical oxidant as determined by approved methods.

6. "Commercial user" means any user of the sewerage system except those specifically classified as residential user or industrial user.

7. "Community sewer or collection system" means a sewer owned and operated by the city tributary to the treatment plant. It includes, but is not limited to sanitary and industrial, pumping stations, syphons, canal crossings, manholes, and sewers leading from the property line or easement line to the collection sewer.

8. "Compatible pollutant" means biochemical oxygen demand, suspended solids, and fecal coliform bacteria, plus additional pollutants identified in the city's National Pollutant Discharge Elimination System (NPDES) permit.

9. "Connection fee" means a charge, as described in this chapter, levied on new construction. The fee is normally paid at the time of issuance of a building permit.

10. "Contamination" means an impairment of the quality of the receiving waters by waste to a degree which creates a hazard to the public health through poisoning or through the spread of disease.

11. "Critical user" means a user who is required to obtain a permit, as defined in Article VI of this chapter.

12. "Dissolved solids" means residue upon evaporation of water after filtration as determined by approved methods. Also termed "total dissolved solids" or "TDS."

13. "Domestic sewage" means the waterborne wastes derived from the ordinary living processes and of such character as to permit

satisfactory disposal, without special treatment, into the community sewer.

14. "Domestic system" means a portion of the sewerage system and treatment facility used primarily for domestic sewage.

15. "Employee" means, for "unit of measure" purposes, the total number of all classifications of employees from all shifts that physically work at the site producing the wastewater discharge. Temporary or part time employees shall be prorated to their time equivalent to a full time employee.

16. "Federal Act or Federal Regulations" means the federal Water Pollution Control Act, PL 92-500, and any amendments thereto; as well as any guidelines, limitations and standards promulgated by the Environmental Protection Agency pursuant to the Act including the Federal Register, 40 CFR Subchapter IV for pretreatment regulations and the Federal Clean Water Act.

17. "Fixed total dissolved solids" means residue upon evaporation of water and heating to five hundred and fifty degrees centigrade after filtration as determined by approved methods.

18. "Gpd or gpd" means gallons per day.

19. "High strength user" means a user with discharge volume in excess of 0.2 MGY or a daily average waste strength in excess of the limitations in Section 13.12.110 or in excess of three hundred milligrams per liter BOD and/or three hundred milligrams per liter SS and/or nine hundred milligrams per liter COD or as determinedby the public works director.

20. "Holding tank waste" means any domestic waste from holding tanks, contained in vessels, chemical toilets, campers, trailers, septic tanks, vacuum tank trucks, or other stationary or mobile sources.

21. "Industrial system'' means the portion of the sewerage system used primarily for industrial waste which discharges directly to the ponding and irrigation system at the treatment plant.

22. "Industrial user" means a user who discharges industrial waste to the sewerage system. Any user of a publicly-owned treatment works identified in the U.S. Standard Industrial Classification Manual, 1987, under the following divisions:

Division A	Agriculture, Forestry, and Fishing
Division B	Mining
Division D	Manufacturing
Division E	Transportation, Communications, Electric, Gas and Sanitary Service
Division I	Services

A user in these divisions may be excluded from the industrial user category if the discharge is essentially domestic sewage. See also "User".

23. "Industrial waste" means the waterborne waste and wastewater from any production, manufacturing or processing operation of whatever nature, including institutional and

commercial operations, where water is used for the removal of significant quantities of waste other than from human habitation of premises connected to the domestic or industrial sewers. Contents of chemical toilets, septic tanks, waste holding tanks and waste sumps shall be classed as industrial waste.

24. "Interference" means the inhibition or disruption of the sewer system, treatment processes or operations of the treatment plant which contributes to the violation of its discharge requirements including inhibition or disruption of sludge disposal practices or compliance with any of the statutory authorities listed in the Federal Register 40 CFR Part 403.3(i).

25. "mgd or MGD" is the abbreviation for million gallons per day.

26. "MGY" is the abbreviation for million gallons per year.

21. "Mass emission rate" means the weight of material discharged to the sewerage system during a given time interval. Unless otherwise specified, the mass emission rate shall mean pounds per day of a particular constituent or combination of constituents.

28. "Moderate strength user" means users with a wastewater strength of less than three hundred milligrams per liter of BOD and ss and having a moderate waste flow less than 0.2 MGY.

29. "Natural outlet" means any outlet into a watercourse, ditch, pond, lake or other body or surface or groundwater.

30. "New source" means an industrial user discharging or planning to discharge from a source at which:

1) Construction is carried out at a site at which no other source is located,

2) Construction totally replaces the process or production equipment that produces the wastewater at an existing source, or

3) The wastewater producing process constructed is substantially independent of an existing source at the same site.

31. "Nuisance" means anything which is injurious to health, or is offensive to the senses, or an obstruction to the free use of property so as to interfere with the comfort or enjoyment of life or property, or which affects at the same time an entire community or neighborhood or any considerable number of persons, although the extent of the annoyance or damage inflicted upon individuals may be unequal.

32. "Pass through" means the introduction of a pollutant by a user into the sewerage system which leaves the treatment plant in quantities or concentrations that alone or in conjunction with other sources, cause a violation of the city's discharge requirements.

33. "Permit" means wastewater discharge permit issued by the public works department.

34. "Person" means any individual, partnership, firm, association, corporation or public agency, including the state of California and the United States of America.

35. "pH" means the logarithm of the reciprocal of the hydrogen-ion activity in moles per liter of solution as determined by approved methods.

36. "Pollutant" means any substance which can cause pollution.
31. "Pollution" means an alteration of the quality of the receiving waters by waste to a degree which unreasonably affects such waters for beneficial use or facilities which serve such beneficial uses. Pollution may include, but not be limited to, contamination.
38. "pretreatment" means the treatment or flow limitation of industrial wastes prior to discharge to the city sewerage system.

39. "Private sewer, building sewer or house service sewer" means that part of the building sewer beginning at the junction thereof with the building plumbing or drainage system and terminating at the property line or at the easement line.
40. "Residential user" means a single-family house or each unit of a duplex, flat, group dwelling, apartment or any other living accommodation which has facilities for sleeping and the preparation of food, whether sanitary facilities connected to the collection system are provided for the occupants thereof, whether or not such sanitary facilities are installed therein or connected thereto; living accommodations designed or used for short-term transient lodging which are rented to other than the controlling occupant of the premises shall be considered as a commercial unit.
41. "Settleable solids" means that portion of matter present in sewage, industrial waste or waters introduced into the storm drains that readily settles out of the carrier liquid in a quiescent state as determined by approved methods.
42. "Sewage" means the waterborne wastes received from human habitation and use of premises for residential, commercial, institutional and industrial purposes.
43. "Sewage service charge" means an regular charge for each user based upon each user's proportional use of the sewerage system.
44. "Sewage service unit or SSU" is defined as each increment of flow equal to the flow from an average two-bedroom residence (two hundred and six gallons per day) and having a strength less than three hundred milligrams per liter BOD and SS.
45. "Sewer" means a pipe or conduit which carries sewage and/or industrial wastes and to which storm, surface and groundwaters are not intentionally admitted. When used in this chapter, "sanitary sewer" means those pipelines operated primarily for the collection of domestic sewage. "Industrial sewer" means those pipelines operated primarily for the collection of industrial waste. "Storm sewer" means those pipelines operated primarily for the collection of stormwaters.
46. "Sewerage system" means all works for collecting, pumping, treating, disposing, storing or reclaiming sewage, industrial waste and/or storm water .
47. "Slug" means a sudden large increase or decrease (factorof two or more) from normal waste volume or concentration.
48. "Storm drain system" means any portion of the sewerage system used for the conveyance of stormwater or surface or

subsurface drainage water.

49. "Suspended **solids"** or "SS" means that portion of residue present in sewage, industrial waste, or waters introduced into the storm drains that is retained on a filter (nonfilterable)as determined by approved methods.

50. "Treatment plant" means the White Slough Water Pollution Control Facility of the city, and includes but is not limited to the domestic sewage treatment facilities, industrial waste treatment facilities, sludge disposal facilities, and irrigatable lands.

51. "Unpolluted water" means water to which no constituent has been added, either intentionally or accidentally, which would render such water unacceptable to the agency having jurisdiction thereof for disposal to the storm drain system or natural drainages or directly to surface waters.

52. "User" means any person that discharges, causes or permits the discharge of wastewater or stormwater into a sewerage system.

53. "Waste" includes sewage and any and all other waste substances, liquid, solid, gaseous, or radioactive, associated with human habitation, or of human or animal origin, or from any producing, washing, manufacturing or processing operation of whatever nature, including such waste placed within containers of whatever nature prior to, and for purposes of, disposal.

54. "Wastewater" means waste and water, whether treated or untreated, discharged into or permitted to enter a sewerage system. 55. "Wastewater constituents and characteristics" means the individual chemical, physical, bacteriological and radiological parameters and such other parameters that serve to define, classify or measure the contents, quality and strength of wastewater as determined by a state certified laboratory,and the volume, rate of flow or other parameters that serve to define quantity.

56. "Wastewater discharge permit" means a permit issued by the city for a user to discharge into a sewerage system. (Priorcode 20-2)

Article 11. Discharge Restrictions

13.12.030

Prohibited discharges. No person shall discharge to the sewerage system, natural outlet, street or earth surface, wastes which cause, threaten to cause or are capable of causing either alone or by interaction with other substances any of the following:

A. Fire or explosion or injury in any way to the sewerage system or the operation of the treatment plant. Prohibited materials include, but are not limited to, gasoline, kerosene, alcohols, sulfides, or any other substance which causes two consecutive readings on an explosion hazard meter at any point in the sewerage system to be more than five percent (5%), or any single reading more than ten percent (10%)of the Lower Explosive

Limit (LEL),

B. Obstruction of flow in a sewerage system or injury of the system or damage to the sewerage collection, or treatment facilities by ashes, cinders, sand, mud, grit, straw, offal, shavings, metal, glass, rags, feathers, tar, plastics, wood, sawdust, manure or other solid or viscous substances capable of causing obstruction of the flow or other interference with the proper operation of the sewerage system as determined by the public works director;

C. Danger to life or safety of personnel, or emission of chemical contaminants into the atmosphere of any confined space of the sewerage system at levels in excess of Threshold Limit Values (TLV) established for airborne Contaminants.

D. A nuisance or prevention of the effective maintenance or operation of the sewerage system, through having or creating a strong, unpleasant odor;

E. Air pollution by the release of toxic or malodorous gases or malodorous gas-producing substances;

F. Interference or pass through at the treatment plant affecting wastewater treatment, land disposal, or sludge or scum processing and disposal;

G. A detrimental environmental impact or a nuisance in the waters or wastewaters of the state or a condition unacceptable to any public agency having regulatory jurisdiction over the city;

H. Discoloration or any other condition in the quality of the city's treatment plant effluent and/or storm system discharge in such a manner that receiving water quality requirements established by law cannot be met by the city;

I. Conditions at or near the city's treatment facilities which violate any statute or rule, regulation or ordinance of any public agency of state or federal regulatory body;

J. Quantities or rates of flow or pollutants which cause interference or overload the city's sewerage system or treatment facilities or cause excessive city collection or treatment costs or hamper treatment facility operation;

K. Pollutants which can cause corrosive structural damage to the sewerage system or treatment facilities, but in no case a pH lower than 5.0 is allowed per federal regulations:

L. *Any* influent to the treatment plant to be over 104 degrees fahrenheit (forty degrees Celsius). (Prior code § 20-3)

13.12.040

Storm drainage and groundwater. Stormwater, groundwater, rainwater, street drainage, subsurface drainage, roof downspouts, exterior foundation drains, swimming pools, groundwater from cleanup operations, or other sources of drainage water shall not be discharged through direct or indirect connections to a domestic system without a permit issued by the public works department . (Prior code § 20-4)

13.12.050

unpolluted water.

A. Unpolluted water, including but not limited to, cooling water, process water or blow-down from cooling towers or evaporative coolers shall not be discharged through direct or indirect connection to the community sewer unless a permit is issued by the city. The city may approve the discharge of such water only when no reasonable alternativemethod of disposal is available.

B. If a permit is granted for the discharge of such water into the community sewer, the user shall pay the applicable user charges and fees and shallmeet such other conditions as required by the public works director. (Priorcode § 20-5)

13.12.060

Septic tanks. No person shall be permitted to use a septic tank for disposal of wastewater if the property to be served is within one hundred feet of the domestic system. Where such domestic sewer exists and buildings are inhabited or used by human beings, the property owner(s) shall install lateral service connection(s) in accordance with this chapter. (Priorcode § 20-6)

13.12.070

Radioactive wastes. No person shall discharge or cause to be discharged any radioactive waste into a sewerage system except:

A. When the person is authorized to use radioactive materials by the State Department of Health or other governmental agency empowered to regulate the use of radioactive materials; and

B. When the waste is discharged in strict conformity with current California Radiation Control Regulations (California Administrative Code, Title 17) and the Atomic Energy Commission regulations and recommendations for safe disposal; and

C. When the person is in compliance with all rules and regulations of all other applicable regulatory agencies; and

D. When the person is in possession of a permit issued by the city which specifically allows such discharges. (Priorcode § 20-7)

13.12.080

Garbage grinders.

A. Wastes from garbage grinders shall not be discharged into a domestic sewer system except:

1. Wastes generated in normal daily preparation of food by residential users; or

2. Where the user has obtained a permit for that specific use from the city, and agrees to undertake whatever self-monitoring is required to enable the public works director to equitably determine the user charges based on the waste constituents and characteristics.

B. Garbage grinders must shred the waste to a degree that all particles will be carried freely under normal flow conditions prevailing in the domestic sewer. Garbage grinders shall not be

used for grinding plastic, paper products, inert materials or garden refuse. (Priorcode § 20-8)

13.12.090
Direct discharge–Use of service sewer. No person shall discharge any substances directly into a manhole or other opening in a sewerage system except through an approved private sewer or house service sewer. (Priorcode § 20-9)

13.12.100
Holding tank waste. A user proposing to discharge holding tank domestic waste into a domestic sewer must secure a permit for each separate discharge. This permit shall state the specific location of discharge, the time of day the discharge is to occur, the volume of the discharge, the wastewater constituents and characteristics and origin of such wastes. Holding tank wastes discharged at the treatment plant facilities may be given a discharge permit which would apply to more than one separate discharge at the discretion of the public works director. If a permit is granted for discharge of such waste into the domestic sewer, the user shall pay the applicable user charges and fees and shallmeet such other conditions as required by the public works director. (Priorcode § 20-10)

13.12.110
Restricted discharges. No person shall discharge or cause to be discharged to a sewerage system any of the following without first obtaining a wastewater discharge permit that specifically permits such waste discharge characteristics:

A. Discharge during a daily twenty-four-hour period in excess of fifty thousand gallons;

B. Waters or waste with a pH factor lower than 6.5 or higher than 8.5 for more than three hours over a twenty-four hour period;

C. Discharges containing metal pickling or etching wastes or plating solutions, whether neutralized or not;

D. Any discharge which has an average daily concentration exceeding the following technically based local limits:

Toxicant	Maximum Allowable Concentration (mg/L)
Arsenic	2.5
Cadmium	0.5
Chromium, total	29
Copper	3.0
Cyanide, total	1.4
Lead	4.0
Mercury	0.8
Nickel	13
Silver	2.9
Zinc	3.5

E. Discharges containing phenols or other taste-producing and

odor-producing substances in concentrations exceeding limits which may be established by the public works director as necessary to meet water quality requirements;

F. Discharges to the collection system at temperatures exceeding one hundred sixty degrees Fahrenheit (seventy degrees Celsius) or exceeding one hundred ten degrees Fahrenheit (forty-three degrees Celsius) for any eight-hour period;

G. Materials which exert or cause in the sewerage system or receiving waters unusual concentrations either of inert suspended solids (such as but not limited to, soil solids, fuller's earth, lime slurries, lime residues, plastics, or ash).

H. Discharges containing fixed total dissolved solids (such as, but not limited, to sodium chloride, sodium sulphate, or other inorganic salts) in excess of six hundred milligrams per liter or in such quantities to cause the effluent TDS of the treatment plant to exceed five hundred milligrams per liter.

I. Any industrial waste, based upon twenty-four-hour composite sampling, (or other representative sampling when not feasible) containing settleable solids in excess of two hundred milligrams per liter, suspended solids in excess of one thousand milligrams per liter and BOD in excess of one thousand milligrams per liter. (Prior code § 20-11)

13.12.115

Grease, oil, and sand interceptors.

Grease, oil, and sand interceptors shall be provided by the discharger when they are necessary for the proper handling of wastes containing grease in excess of one hundred fifty milligrams per liter of animal and vegetable origin and fifty milligrams per liter of mineral origin, or any flammable wastes, sand, grit and other harmful ingredients. All interceptors shall be of a type and capacity approved in writing, prior to installation, by the public works director, and shall be located so as to be readily and easily accessible for cleaning and inspection. Grease and oil interceptors shall be constructed of impervious materials capable of withstanding abrupt and extreme changes in temperature. They shall be of substantial construction, watertight and equipped with easily removable covers which, when bolted in place, are gastight and watertight. Grease and/or oil/sand interceptors shall be constructed in any place or building having a capacity to serve group meals or commercial and industrial cleaning facilities. Where installed, all grease, oil, sand and grit interceptors shall be maintained by the owners at owner's expense in continuous efficient operation at all times. Materials collected shall not be reintroduced into the sewerage system. Records of all maintenance, cleaning, and hauling of materials shall be maintained by the owner and such records shall be available at all times for inspection by City personnel.

13.12.120

Federal pretreatment requirements. Users in industrial

categories subject to the categorical pretreatment standards development by the EPA under the Clean Water Act of 1977 (PL 95 217) 33 U.S.C. 1251 et seq. are required to achieve limitations based on Best Practical Control Technology (BPT) immediately and Best Available Technology Economically Achievable (BAT) by July 1, 1983 in accordance with Sections 301 and 304. New sources are required to comply with New Source Performance Standards (NSPS) based on Best Available Demonstrated Control Technology (BDT) for industrial users in terms of concentration and equivalent mass values. Users must comply with pretreatment standards promulgated pursuant to Section 307 and the Federal register 40 CFR Subchapter IV. Dilution of any discharge may not be used to comply with any pretreatment standards. Categorical industrial users must submit Baseline Monitoring Reports, compliance schedule reports, 90 day compliance reports, and periodic reports on continued compliance as required and such reports must be signed by an authorized representative of the industrial user and be retained for a minimum of three years (or period of litigation, whichever is longer). The city may issue standards more stringent than the federal standards if the public works director determines that the limitations in the federal standards are not sufficient to:

A. Protect the operation of the city's treatment facilities; or

B. Comply with water quality standards, sludge disposal or effluent limitations specified in the city's National Pollutant Discharge Elimination System (NPDES) permit.

C. Meet technically based local limits, which must be calculated per federal pretreatment program guidelines. The city must annually provide public notification of industrial users which during the previous 12 months significantly violated applicable pretreatment standards.

(Prior code § 20-12)

13.12.130

Industrial waste permits. Source control of industrial discharges shall be accomplished by use of a permit and monitoring system as described in this chapter. Discharge of industrial waste from any person within the city onto land or to any natural outlet may be permitted only if the discharge complies with all requirements of the regional water quality control board and of all other local, state and federal laws and regulations. (Prior code § 20-13)

13.12.140

Other legal restrictions. Nothing contained in this chapter shall be construed to limit any additional requirements that may be imposed by the County Health Officer, by the Regional Water Quality Control Board, Fish and Game, or by other governmental agencies having jurisdiction. (Prior code § 20-14)

13.12.150

Connections outside city. No discharge from facilities or properties outside the limits of the city shall be allowed into the sewerage system. (Prior code § 20-15)

13.12.160
Screening of industrial waste. No person shall discharge or cause to be discharged to the industrial system an industrial waste that is too large to pass through or, has not been pretreated by being passed through, a screening device with a maximum screen opening of 1.5 millimeters. (Prior code § 20-16)

Article 111. Service Charges and Connection Fees

13.12.170
Classification. All users shall be classified for wastewater collection, treatment and disposal purposes in accordance with the principal activity conducted by the person, or the quantity and quality of discharge, as determined by the public works director. The purpose of classification is to facilitate the regulation of wastewater discharge based on quantity and quality of flow, to provide an effective means of industrial waste source control, and to establish a system of sewage service charges and connection fees which will ensure, but not be limited to, the recovery of city capital, operating and maintenance costs in an equitable manner. It is the responsibility of the user to provide the City a reasonable estimation of wastewater quantity and quality, or other applicable units of measure, and any increases thereof, for the purpose of classification and assessment of service charges and connection fees. (Prior code § 20-17)

13.12.180
Domestic system service charges.
A. Basis. Charges for use of the domestic system shall be determined by the volume, biochemical oxygen demand (BOD) and suspended solids (SS) of wastes discharged.
B. Applicability. Those residential, commercial and industrial users whose discharge of wastes classify them as a moderate-strength user and those dischargers of industrial and commercial wastes that classify as high-strength users shall pay charges as determined in this section. Determination of the category for each specific user shall be made by the public works director.
C. Moderate-strength Users. All moderate-strength users shall be assigned sewage service units. The minimum sewage service units assigned to any commercial and industrial user shall be 1.0 unit. The cost of treating one sewage service unit is calculated by dividing the total operating, maintenance and capital costs of wastewater facilities allocated to moderate strength users by the total number of units. Service charges for moderate-strength

users shall be determined by multiplying the cost of one sewage service unit by the number of sewage service units assigned to each user.

1. Residential user sewage service units shall be based upon the number of bedrooms per dwelling units as follows:

Number of Bedrooms	Sewage Service Units
1	0.75
2	1.00
3	1.25
4	1.50
5	1.75
6	2.00
7	2.25

2. Commercial and industrial user sewage service charges shall be based on the number of sewage service units assigned to each user. The unit of measure for determining the number of sewage service units assigned to each user are as follows:

	User Description	Unit of Measure
1.	Meeting place, religious	Each 200 seats
2.	Meeting place, public	Each 100 seats
3.	Hotel, motel without kitchenettes	Each 3 beds
4	Hotel, motel with kitchenettes	Each unit
5.	Veterinary clinic	Each 4 employees
6.	Post office	Each 15 employees
7.	Funeral parlor	Each 3 employees
8.	Service station with service garages	Each 2.5 pumps
9.	Service station without service garages	Each 7 pumps
10.	Car wash, automatic bay	20 SSU's per bay
11.	Car wash, self serve bays	2 SSU's per bay
12.	School, 8th grade and below	Each 20 students
13.	High school	Each 15 students
14.	Eating place, seating only	Each 10 seats
15.	Eating place, seating and take-out,	Each 7 seats
16.	Eating place, "pizza parlor"	Each 35 seats
17.	Eating place, take-out only	Each 5 employees
18.	Lunch truck business	Each 5 employees
19.	Laundry, coin-op., reg. mach.	Each 1.5 machines
20.	Laundry, coin op., big mach.	Each 1 machine
21.	Comm. laundry and dry cleaning	Each 3 employees
22.	Dentist's office	Each 5 employees
23.	Office, store, warehouse, manufacturer, Doctor's, Chiropractor's and X-ray offices	Each 8 employees
24.	Grocery Store, Supermarket (Having veg/fruit or butcher/meat sections)	Each 4 employees
25.	Bar	Each 20 seats
26.	Barber, beauty shop	Each 3 workstations

27.	Hospital, convalescent home	Each 3 beds
28.	Rest and retirement home	Each 3 beds,,
29.	Mobile home park	Each 1.33 pads
30.	RV dump station	Each station

One sewage service unit shall be assigned to each unit of measure. Fees shall be based on nearest one-tenth sewage service unit except minimum number of sewage service units shall be 1.0. At the discretion of the Public Works Director a commercial user's service charges and/or connection fees may be based on actual wastewater discharge flows estimated by use of an influent water meter or other appropriate means.

D. High-strength Users.

1. All high-strength user sewage service charges shall be determined based upon the actual quantity of flow, BOD, and SS discharged annually. The unit cost of collection, treatment and disposal for each characteristic shall be determined and multiplied by the measured wastewater characteristics for each user to develop the annual sewage service charge.

2. The unit cost for each of the characteristics set out in subdivision 1 of this subsection shall be determined by: (a) distributing the total capital, operation and maintenance cost between moderate-strength and high-strength users, (b) proportion the costs for high-strength users among various characteristics, and (c) divide the total cost for each characteristic by the total quantity discharged by the high strength users.

3. The sewage service charge shall be determined by multiplying the unit cost by the quantity of each characteristic. (Prior code § 20-18)

13.12.190

Domestic system connection fees. The connection fee shall cover the capital cost associated with the wastewater treatment facilities capacity which will be utilized by the new discharger. Any actual costs incurred by the city in making the connection shall be separate and in addition to the connection fee described in this section.

A. Moderate-strength user connection fees shall be based on a rate per sewage service unit as assigned under Section 13.12.180. The minimum connection fee for a new commercial or industrial user shall be one sewage service unit and additions or modifications shall be prorated to the nearest 0.1 sewage service unit.

a, High-strength user connection fees shall be based on a unit rate for flow, BOD and SS. The estimated annual quantities of each characteristic shall be justified to, and approved by, the public works director for the purpose of determining the connection fee.

(Prior code § 20-19)

13.12.200
Industrial system service charges.
A. Industrial system sewage service charges shall be determined based upon the actual quantity of flow and BOD discharged annually. The unit cost for each characteristic will be determined annually and multiplied by each user's measured effluent characteristics. The total of the two characteristic fees shall be the annual sewage service charge.
B. The unit cost for each characteristic shall be determined by distributing the total operation, maintenance and capital costs to each characteristic at a proportionate rate and dividing each proportionate cost by the total annual quantity of each characteristic discharged to the system. (Prior code § 20-20)

13.12.210
Industrial system connection fees. Fees shall be determined on an individual basis by the public works director and shall be, in part, based upon the value of existing capacity to be utilized and/or the cost of providing additional new capacity. The connection fee shall be based on a unit rate for the cost of treating flow and BOD. (Prior code § 20-21)

13.12.215
Adjustments and additions.
A. Service charge adjustments. When it is found that a reasonable estimation of wastewater quantity or quality, or other applicable units of measure, have not been used for the assessment of sewage service charges the city has the right to make adjustments as determined by the public works director. Undercharges for the period of incorrect billing up to three years, per California Code of Civil Procedures, Section 338, are due and payable on demand and overcharges will be credited.
B. Connection fee adjustments. Any user, after one full year of operating data is available, may request the public works director to make an adjustment, or the public works director may institute an adjustment, if a significant variation exists between the estimated and actual wastewater quantity or quality, or other applicable units of measure. Increases in connection fees shall be due and payable on demand at the time the public works director makes the fee adjustment and decreases will be credited.
C. Connection fee additions. When a user has in the opinion of the public works director significantly increased either wastewater quantity or quality or units of measure over what was used for all previous connection fee calculations, additional connection fee charges shall be assessed for the additional wastewater treatment capacity utilized. Such additional connection fees shall be due and payable on demand at the current rate at the time the public works director makes the determination.

13.12.220
Storm drain and cooling water service charges.
A. The rate for disposal of stormwaters, swimming pool or cooling water discharges, or wash waters into the **city's** storm drains will be established by resolution.
B. The city shall estimate and determine the amount of storm, swimming pool, cooling water or wash waters deposited into the city's storm drains unless the user of the service elects to provide, install and maintain in good working order an integrating meter satisfactory to the city for the purposes of measuring such storm, swimming pool, cooling water or wash waters.
C. In determining the amount of storm, swimming pool, cooling water or wash waters deposited into the city's storm drain system, no charge shall be made for the storm waters or minor irrigation waters or drainage from roofs, pavements or hard-surfaced areas within the city limits. Where such drainage is metered along with wash water, a credit of one thousand two hundred fifty gallons per year for each one hundred square feet, as projected and measured upon a horizontal plane, of such drainage area tributary to the meter shall be allowed. Where roofs or other areas are sprinkled or flushed, such flushing or sprinkling waters shall be included in the quantities for billing purposes. For areas outside the corporate limits of the city tributary to the city's storm drain system, stormwaters shall be included in the quantities determined for billing purposes and unless otherwise metered, the annual quantity of stormwaters shall be assumed as equal to one thousand two hundred fifty gallons per one hundred square feet, as projected and measured upon a horizontal plane of roof, pavement or hard-surfaced area service. [Prior code § 20-22)

13.12.225
Storm drainage impact fee.
A. Purpose Findings.
1. In order to implement the goals and objectives of the city's general plan, and to mitigate the impacts **upon** the drainage system of the city caused by future development, certain public drainage improvements or facilitiesmust be or have been required to be constructed. The city council has determined that a development impact fee is necessary and appropriate in order to finance these public drainage improvements and to pay for each development's fair share of the construction costs of such improvements. In establishing the fee described in this section, the city council has found the fee to be consistent with its general plan, and pursuant to Government Code Section 65913.2, has considered the effects of the fee with respect to the city's housing needs as established in the housing element of the general plan.
2. The city council also finds that the city's storm drain system, which consists of an interconnected network of pumping stations, retention basins and trunk lines, has been planned as

a unified system and constructed in stages since 1963 using a combination of funding sources, including a master storm drain fee. The city council finds that it is in the best interest of the entire city that properties that are to be developed pay the cost of additional storm drain facilities in accordance with the storm drain master plan so such costs will not become a burden on city taxpayers.

B. Established.

1. There is established, upon issuance of all building, use or occupancy permits and subdivisionmaps for development in the city, a storm drainage fee.

2. This fee is established to pay for public drainage improvements. The city council shall, in a council resolution adopted after a duly noticed public hearing, set forth the specific amount of the fee, describe the benefit, list the specific municipally owned improvements to be financed, describe the estimated cost of these facilities, describe the reasonable relationshipbetween this fee and the various types of new developments, and set forth the time for payment. As described in the fee resolution, this development fee shall be paid by each developer as specified in Government Code Section 53077.5, referring to time of collection. On an annual basis, the city council shall review this fee to determine whether the fee amounts are reasonably related to the impacts of developments and whether the described public drainage facilities are still needed.

3. Said resolution and associated studies shall be available to the general public for a period of at least fourteen days prior to the public hearing.

C. Limited Use of Fee Revenues. The revenues raised by payment of these fees shall be placed in a separate and special account, and such revenues, along with any interest earnings on that account, shall be used solely to:

1. Pay for the City's future construction of drainage facilities described in the resolutions enacted pursuant to subsection B of this section, or to reimburse the city for those described or listed facilities constructedby the city with funds advanced by the city from other sources;

2. Reimburse developers who have been required or permitted by subsection D of this section to install such listed facilities which are oversized, with supplemental size, length or capacity: or

3. Pay for and/or reimburse costs of program development and ongoing administration of the fee program for such public facilities.

D. Developer Construction of Facilities. Whenever a developer is required, as a condition of approval of a subdivisionmap or development permit, to construct a public drainage facility described in a resolution adopted pursuant to subsection B of this section, which facility is determinedby the city to have supplemental size, length or capacity over that needed for the impacts of that development, and when such construction is

necessary to ensure efficient and timely constructionof the facility's network, a reimbursement agreement with the developer, and a credit against the fee which would otherwise be charged pursuant to this section on the development project, shall be offered. The reimbursement amount shall not include the portion of the improvement needed to provide services or mitigate the burdens created by the development.

E. Appeals. Any appeal from the imposition of fees under this section shall be done in substantial conformance with the procedures found in Section 13.12.590 of this chapter.

F. Effective Date of Fee. The ordinance codified in this section was adopted at a noticed public hearing, at which time the city council also considered the initial development impact fee resolution. This fee shall apply to the issuance of any building, use or occupancy permit, or for any development approval issued after thirty days following the passage of the ordinance codified in this section. (Ord.1440 § § 1 - 6, 1988)

13.12.230

Holding tank waste charges. The charge for a discharge of holding tank wastes shall be based on the method for determining charges for the high strength user in the domestic system as outlined in Section 13.12.180(D). Characteristics of BOD and ss shall be determined by random sampling of holding tank waste discharges. (Priorcode § 20-23)

13.12.240

Charges and fees. The schedule of charges and fees for domestic system service charges and connection fees, industrial system service charges and connection fees, storm drain service charges, inspection sampling and analysis charges, and holding tank waste charges will be those established and adopted by the city council from time to time by resolution. (Ord. 1429 § 1, 1988: prior code § 20-24)

13.12.245

Schedule of charges and fees. The fee schedule for sewage service, connection fees, and monitoring operative, is as follows:

DOMESTIC SYSTEM:*

A. Residential.

1. Sewage service charge.

Number of Bedrooms	Monthly Rate
1	$ 4.64
2	6.19
3	1.14
4	9.28
5	10.83

6	12.38
7	13.93

2. Connection fee: $1825.00 per unit*

*"Unit": Sewage service unit, defined as each increment of flow of a typical two-bedroom residence (206 gallons per day and having BOD and SS strengths of less than 300 milligrams per liter). Units for residential, commercial, and industrial users are shown in section 13.12.180.

B. Commercial.

1. Annual sewage service: $74.28 per unit per year

2. Connection fee: $1825.00 per unit

C. Industrial.

1. Annual sewage service.

Moderate strength user: $74.28 per unit per year

High strength user:

Unit	Item	Unit Charge
Flow	MG.	$357.41 per MG.
BOD	1,000 lbs.	174.90 per 1,000 lbs.
SS	1,000 lbs.	142.97 per 1,000 lbs.

2. Connection Fee.

Moderate strength user: $1825.00 per unit.

High strength user

Unit	Item	Unit Charge
Flow	MG.	$9733.01 per MG.
BOD	1,000 lbs.	4009.18 per 1,000 lbs.
SS	1,000 lbs.	1805.59 per 1,000 lbs.

INDUSTRIAL SYSTEM:

A. Annual sewage service

Unit	Item	Unit Charge
Flow	MG.	To be determined by the public works director as outlined in Section 13.12.200 of this code.
BOD	1,000 lbs.	

B.

Connection fee: To be determined by the public works director as outlined in Section 13.12.210 of this code.

HOLDING TANK WASTES:*

A. Dumping charge: $54.75 per 1,000 gal.

STORM DRAIN SYSTEM:
A. Storm drain disposal charge: $66.13 per MG

*Editors Note: Ord.1463 § 5 provides as follows:
The above fees for the Domestic System and Holding Tank Wastes shall be increased 15% annually on October 1 of each year until the White Slough Water Pollution Control Facility expansion has been completed or this ordinance is superseded.
(Ord. 1463 § 1,1989: Ord. 1428 § 1, 1988)

INSPECTION, SAMPLING AND ANALYSIS:*
*Fee Schedule to be set by resolution.

13.12.250
Billing and collections. All billing and collections shall be per Section 13.04.030 of this code. (Priorcode § 20-25)

13.12.260
Appeals. The owner or occupants of any premises who finds that the charges and/or fees provided for in this article are unjust or inequitablemay make application to the public works director to have the feesmodified, in accordance to Section 13.12.590. A commercial or industrial discharger, after one full year of operating data is available, may request the public works director to make an adjustment, or the public works director may institute an adjustment, if a significant variation exists between the estimated and actual quantities for each characteristic. Increases in connection fees shall be due and payable on demand at the time the public works director makes the fee adjustment and decreases will be credited. Increases or decreases in sewage service charges shall be implemented in the next billing following the determination by the public works director that adjustment is appropriate.
Where water usage is metered, the estimated sewer flows may be compared to a two-bedroom residence (one SSU) to determine or adjust the connection fee or sewage service charge.(Ord. 1463 § 4, 1989: prior code § 20-26)

Article IV. Construction Generally.

13.12.270
Permit. No unauthorized person shall uncover, make any connection with or opening into, use, alter or disturb any sewerage system or appurtenances thereof without first obtaining a written permit from the public works director. (Priorcode § 20-43)

13.12.280
Design standards. All construction of public sewerage systems or appurtenances thereof shall conform to the design criteria, the standard plans and specifications and the inspection and testing procedures in accordance with current city standards.

(Prior code § 20-44)

13.12.290
Application for service. Whenever a property owner is desirous of obtaining sewer service where no adequate sewer system exists, an application shall be made to the public works director for sewer service in accordance with Article V of this chapter. (Prior code § 20-45)

Article V. Extensions

13.12.300
Purpose. The city council is desirous of adopting a sewer service and extension policy that is fair and equitable to all developing properties and that provides that the cost of extension shall be distributed among subsequently developing properties connecting thereto. (Prior code § 20-46)

13.12.310
Application. Whenever a property owner is desirous of obtaining sewer service, an application shall be made to the public works director for sewer service. The public works director shall determine the closest adequate sewer and, if an extension is necessary, indicate the size of the main to be extended and the limits of the extension. (Prior code § 20-47)

13.12.320
Applicant's obligation. Whenever the public works director determines that a sewer extension is necessary, the applicant will be required to install, at the applicant's own expense, the sewer extension in accordance with engineering plans furnished by applicant and approved by the public works director. The plans shall be prepared in accordance with the city design standards. (Prior code § 20-48)

13.12.330
Extension for full frontage width. In every case where a sewer is to be tapped to serve a parcel, the same shall be extended the full frontage of the parcel unless the public works director determines that the sewer will not need to be extended to serve any other properties. (Prior code § 20-49)

13.12.340
Minimum diameter. The minimum size sewer main shall have a nominal inside diameter of six inches. Larger size mains may be required as determined by the public works director from engineering calculations or the city master sewer plan. (Prior code 20-50)

13.12.350
Reimbursement Application. Whenever an applicant for sewer

extension constructs or installs a sewer that may serve abutting properties, the applicant may apply for a sewer extension reimbursement agreement. The public works director shall determine the extent to which abutting properties may be served and recommend a sewer extension agreement to the city council prior to construction of any sewer. (Prior code § 20-51)

13.12.360
Reimbursement-Agreement. The sewer extension reimbursement agreement shall contain the following:

A. The amount of the reimbursable costs shall be determined by the public works director and subject to the approval of the city council.

B. Reimbursable costs shall include estimated sewer construction costs, less any applicable credits, plus an administrative and engineering cost of ten percent of the construction cost.

C. Sewer laterals serving individual properties shall not be included as a reimbursable cost.

D. There shall be no reimbursement to the applicant in excess of reimbursable costs stated in the agreement.

E. No interest, finance or security costs shall be included in the reimbursable costs.

F. Reimbursement shall be paid from charges collected by the city from abutting properties as they connect to the new sewer.

G. Reimbursement shall be paid only from charges collected within ten years from the date of the agreement. The city shall have no obligation to pay reimbursement from any source other than reimbursement funds collected pursuant to this chapter. Charges collected from abutting properties after ten years shall be retained by the city.

H. The charges collected for reimbursement shall be based upon front footage parallel to the sewer of the abutting properties.

I. An administrative cost of two percent of the total reimbursable cost shall be deducted from any moneys paid to the city as payment for administering the reimbursement provisions of this chapter.

J. Reimbursement shall be payable to heirs, successors and assigns of the applicant. (Prior code § 20-52)

13.12.370
Reimbursement—Oversize mains. Whenever engineering calculations or the city master sewer plan require that a sewer main larger than ten inches in diameter be installed, the city shall pay to the applicant the difference in cost of material between the actual sewer to be installed and a ten-inch sewer. The difference in costs of material shall be determined by the public works director. Payment shall be made at the time the sewer reimbursement agreement is approved by the city council. (Prior code § 20-53)

13.12.380
Reimbursement City eligibility. Whenever the city has extended or installed a sewer that will serve abutting properties, the city shall be eligible for reimbursement in a like manner as other applicants. (Prior code § 20-54)

13.12.390
Reimbursement Payment. Whenever the city council has approved a sewer extension reimbursement agreement, the front footage charges shall be collected by the city from any parcel abutting the sewer covered in the agreement at the time of development and prior to sewer service being provided to the abutting parcel. (Prior code § 20-55)

13.12.400
Reimbursement Entitlement letter. When payment for reimbursement-has been made, the public works director shall prepare a letter of entitlement stating the fees collected, reference to the sewer extension reimbursement agreement, the amount to be reimbursed, and the administrative charge to be retained by the city. This letter of entitlement shall be forwarded to the finance director for actual reimbursement under terms of the agreement. (Prior code § 20-56)

13.12.410
Reimbursement Unclaimed. The finance director shall mail the reimbursement-to the last address on file with the finance director of the applicant in the sewer reimbursement agreement. Any reimbursement returned or unclaimed after two years from the date of mailing will revert to the city's general fund. (Prior code 20-57)

Article VI. Administration

13.12.420
Discharge reports. In addition to the federally required reports described in section 13.12.120, the city may require that any high-strength user discharging, or proposing to discharge, wastewater into a sewerage system, file a periodic discharge report. The discharge report may include, but not be limited to, nature of process, volume, rates of flow, mass emission rate, temperature, pH, production quantities, hours of operation, number and classification of employees, or other information which relates to the generation of waste including characteristics in the wastewater discharge. Such reports shall also include the chemical characteristic and quantity of liquid or gaseous materials used annually as well as those stored on site, even though the latter may not normally be discharged. All reports are due 14 days after the conclusion of monitoring or receipt of the laboratory analysis report and must be signed by an authorized representative of the industrial user. All such

reports shall be retained for a period of three years (or period of litigation, whichever is longer), and shall be made available for inspection and copying by the city. In addition to discharge reports, the city may require information in the form of wastewater discharge permit applications and self-monitoring reports. (Prior code § 20-27)

13.12.430
Discharge permit-Required. All critical users proposed to connect or to discharge into a sewerage system after the effective date of the ordinance codified in this chapter must obtain a wastewater discharge permit before connecting to, or discharging into, a sewerage system. All existing critical users connected to, or discharging into, a sewerage system must apply for a wastewater discharge permit within one hundred eighty days after the effective date of the ordinance codified in this chapter, except for subsection D of this section which shall be ninety days after notification by the public works director. For purposes of this chapter, "critical user" means any user whose user classification is identified in the Standard Industrial Classification (SIC) Manual in any of Divisions, A, B, D, E and I and who (A) has a discharge flow of fifty thousand gallons or more per average workday, or (B) has a flow greater than five percent of the flow in the city's wastewater treatment system, or (c) has in user's wastes toxic pollutants in toxic amounts as defined in standards issued under Section 307 (a) of the Federal Act, or (D) is found by the public works director to have significant impact, either singularly or in combination with other contributing industries, on the treatment or sewerage collection system. (Prior code § 20 28(a))

13.12.440
Discharge permit-Optional. The public works director may issue a wastewater discharge permit to any user in accordance with the terms of this article in the following categories:
A. A user who requires the user charges and fees to be based on an estimation of wastewater flow;
B. Any user whose wastewater strength is less than the normal range for the user classification because of pretreatment, process changes or other reasons;
C. Any single dwelling, office, *commercial* business, **lodge,** apartment, church or multi-use building user who discharges only domestic waste. (Prior code 5 20-28(b))

13.12.450
Discharge permit-Application.
A. Users seeking a wastewater discharge permit shall complete and file with the public works director an application in the form prescribed by the public works director, and accompanied by any applicable fees. The applicant may be required to submit, in units and terms appropriate for evaluation, the following information:

1. Name, address and SIC number of applicant;
2. Volume of wastewater to be discharged;
3. Wastewater constituents and characteristics including, but not limited to, those mentioned in Article II of this chapter;
4. Time and duration of discharge;
5. Average and thirty-minute peak wastewater flow rates, including daily, monthly and seasonal variations, if any;,
6. Any other information determined necessary by the public works director to evaluate the permit application. This may include, but is not limited to, the following:
a. Site plans, floor plans, mechanical, and plumbing plans, water supply and discharge information and details to show all sewers and appurtenances by size, location and elevation,
b. Description of activities, facilities and plant process on the premises including all materials, processes and types of materials which are, or could be, discharged,
c. Each product produced by type, amount and rate of production,
d. Number of employees and hours of work.
B. The public works director will evaluate the data furnished by the user and may require additional information. After evaluation and acceptance of the data furnished, the public works director may issue a wastewater discharge permit subject to terms and conditions provided in this article. (Priorcode § 20-28(c))

13.12.460
Discharge permit—Conditions. Wastewater discharge permits shall be expressly subject to all provisions of this chapter and all other regulations, user charges and fees established by the city council. The conditions of wastewater discharge permits shall be uniformly enforced by the public works director or assigned agent in accordance with this chapter, and applicable state and federal regulations. Permits may contain the following:
A. The unit charge or schedule or user charges and fees for the wastewater to be discharged to the sewerage system:
B. The collection of connection fee, inspection fee and prepayment for the prorated portion of annual user charges, if collected annually;
C. The average and maximum wastewater characteristics;
D. Limits on rate and time of discharge or requirements for flow regulations and equalization;
E. Requirements for installation of inspection, monitoring, and sampling facilities;
F. Pretreatment requirements;
G. Specifications for monitoring programs which may include sampling locations, frequency and method of sampling, number, types and standards for tests and reporting schedule;
H. Requirements for submission of technical reports or discharge reports;
I. Requirements for maintaining plant records relating to wastewater discharge as specified by the city, and affording the

city access thereto;

J. Mean and maximum mass emission rates, or other appropriate limits when incompatible pollutants (asdefined in Article I of this chapter) are proposed or present in the user's wastewater discharge;

K. Other conditions as deemed appropriate by the public works director to ensure compliance with this chapter and federal and state regulations. (Priorcode § 20-28(d),

13.12.470

Discharge permit-Term-Changes-Renewal. Permits shall be issued for a specified time period, not to exceed five years. A permit may be issued for a period less than a year or may be stated to expire on a specific date. A user discharging after the expiration date of the permit shall be considered in violation of this chapter. It is the responsibility of the user to apply for a new discharge permit 60 days before the expiration date of their existing permit. The terms and conditions of the permit may be subject to modification and change by the city during the life of the permit, as limitations or requirements stipulated in this chapter are modified and changed. The user shall be informed of any proposed changes in user's permit at least thirty days prior to the effective date of change. Any changes or new conditions in the permit shall include a reasonable time schedule for compliance. (Priorcode § 20- 8 c),

13.12.480

Discharge permit Transfer. Wastewater discharge permits are issued to a specific user for a specific operation. A wastewater discharge permit shall not be assigned, transferred or sold to a new owner, new user, different premises or a new or changed operation without prior written approval of the public works director. (Priorcode § 20 9(f)),

13.12.490

Discharge permit-Suspension. A permit may be temporarily suspended at any time if it is the public works director's opinion that the continued discharge of the waste or water into the sewerage system would substantially jeopardize the ability of the treatment facilities or sewerage system to meet water quality requirements or would cause an unsafe condition to occur. In lieu of temporary suspension of permits, the public works director may impose such temporary restrictions, conditions or limitations upon the quantities, qualities and rates of discharge made thereunder as deemed necessary to assure that the receiving water quality requirements will not be violated or to alleviate the unsafe condition. Notice of the temporary suspension or the imposition of temporary restrictions, conditions or limitations shall be given in writing by the public works director to the permittee at least twenty-four hours prior to their effective date. Delivery of the notice to the permittee's place of business shall constitute delivery of notice to permittee. (Priorcode §

20-28(g))

13.12.500
Discharge permit-Revocation. Any user who violates the following conditions of the permit or of this chapter, or applicable state and federal regulations, is subject to having this permit revoked:
A. Failure of a user to factually report the wastewater constituents and characteristics of their discharge;
B. Failure of the user to report in advance significant changes in operations or wastewater constituents and characteristics;
C Refusal of reasonable access to the user's premises and/or records for the purpose of inspection or monitoring of all possible sources of pollution;
D. Failure to pay wastewater bill:
E. Violation of conditions of the permit. (Prior code § 1))

13.12.510
Monitoring facilities.
A. The public works director may require the user to construct and maintain, at the user's expense, monitoring facilities which meet all government safety regulations (OSHA) to allow inspection, sampling, and flow measurement of the building sewer or internal storm drainage systems and may also require sampling or metering equipment to be provided, installed, operated and maintained at the user's expense. The monitoring facility should normally be situated on the user's premises, but the public works director may, when such a location would be impractical or cause undue hardship on the user or the city, require the facility to be constructed in the public right-of-way and located so that it will not be obstructed by landscaping or parked vehicles.
B. When the monitoring facility is inside the user's fence, there shall be accommodations to allow access for the public works director or designated representative, such as a gate secured with a city lock. There shall be ample room in or near such monitoring facility to allow accurate sampling and compositing of samples for analysis. The monitoring facility shall be maintained at all times in a safe and proper operating condition at the expense of the user.
C. Whether constructed on public or private property, plans and specifications shall be approved by the public works director and be in accordance with all applicable city construction standards and specifications. Construction shall be completed within sixty days following written notification by the city, unless a time extension is otherwise granted by the city. (Prior code § 20-29)

13.12.520
Inspection, sampling, monitoring, and analysis. The public works director or designated representative may inspect the

facilities of any user to ascertain whether the purpose of this chapter is being met and all requirements are being complied with. Persons or occupants of premises where wastewater is created or discharged shall allow the public works director or designated representative ready access at all reasonable times to all parts of the premises for the purposes of inspection or sampling or in the performance of any of their duties. The public works director or designated representative shall have the right to set up on the user's property such devices as are necessary to conduct sampling or metering operations and be allowed to copy any of the user's discharge records per 40 CFR 403.12(1)(2). Where a user has securitymeasures in force which would require proper identification and clearance before entry into their premises, the user shall make necessary arrangements with its security guards so that upon presentation of suitable identification, the public works director or designated representative will be permitted to enter without delay for the purposes of performing their specific responsibilities. The user will be charged a fee to recover the costs for inspections (investigations),sampling, monitoring, and analyses performed by the city for purposes of billing and insuring compliance with all regulations. (Priorcode § 20-30)

13.12.530
Accidental discharge prevention.

A. Each user shall provide protection from accidental discharge of prohibited materials or other wastes regulated by this chapter. Such facilities shall be provided and maintained at a level of operation comparable to that of the original construction at the user's expense. Detailed plans showing facilities and operating procedures to provide this protection shall be submitted to the public works director before construction of the facility.

B. The review of such plans and operating procedures by the public works director will in no way relieve the user from the responsibility of modifying the facility to provide the protection necessary to meet the requirements of this chapter. (Priorcode § 20-31)

13.12.540
Confidential information.

A. All information and data on a user obtained from reports, questionnaires, permit application, permits and monitoring programs and from inspections shall be available to the public or other governmental agency without restriction unless the user specifically requests and is able to demonstrate to the satisfaction of the public works director that the release of such information would divulge information, processes or methods that would be detrimental to the user's competitive position.

B. When requested by the person furnishing a report, the portions of a report which might disclose trade secrets or secret

processes shall not be made available for inspection by the public, but shall be made available to governmental agencies for use in making studies; provided, however, that such portions of a report shall be available for use by the state or any state agency in judicial review or enforcement proceedings involving the person furnishing the report. Wastewater constituents and characteristics will not be recognized as confidential information.

C. Information accepted by the public works director as confidential shall not be transmitted to any governmental agency or to the general public by the public works director, until and unless prior and adequate notification is given to the user. (Prior code § 20-32)

13.12.550

Special agreements. Special agreements and arrangements between the city and any persons or agencies may be established when, in the opinion of the city council, unusual or extraordinary circumstances compel special terms and conditions. However in no case may federal pretreatment standards be waived or modified. (Prior code § 20-33)

Article VII. Enforcement

13.12.560

Accidental discharge notice.

A. Notice to Authorities.

1. Users shall notify the Water/Wastewater Superintendent or the White Slough Water Pollution Control Facilities (WSWPCF) personnel immediately by telephone or in person, or by calling the Public Works Department 24 hr emergency number, upon accidentally discharging wastes in violation of this chapter, or in violation of a city-issued discharge permit to enable countermeasures to be taken by the city to minimize damage to the sewerage system, treatment facility, treatment processes and/or the receiving water.

2. This notification shall be followed, within ten calendar days of the date of occurrence, by a detailed written statement to the public works director describing the cause, location, type, volume, concentration, date, time, and duration of the accidental discharge, measures taken to correct the problem, and steps taken to prevent future occurrence.

3. Such notification will not relieve users of liability for any expense, loss or damage to the sewerage system, treatment plant, or treatment process, or for any fines imposed on the city on account thereof under Section 13350 of the California Water Code or for violations of Section 5650 of the California Fish and Game Code.

B. Employee Training. In order that employees of users be informed of the city's requirements, users shall make available to their employees copies of this chapter, together with such other wastewater information and notices which may be furnished by the city from time to time directed toward more effective

water pollution control. A notice shall be furnished and permanently posted on the user's bulletin board advising employees whom to call in case of an accidental discharge in violation of this chapter. (Priorcode § 20-34)

13.12.570
Cease and desist order. When the city finds that a discharge of wastewater has taken place in violation of prohibitions or limitations of this chapter, or the provisions of a wastewater discharge permit, the public works director may issue an order to cease and desist, and direct those persons not complying with such prohibitions, limits, requirements, or provisions, to:

A. Comply forthwith;

B. Comply in accordance with a time schedule set forth by the city; or

C. Take appropriate remedial or preventive action in the event of a threatened violation. (Priorcode § 20-35)

13.12.580
Compliance timetable. When the city finds that a discharge of wastewater has been taking place, or is threatening to take place, in violation of prohibitions or limitations prescribed in this chapter, or wastewater source control requirements, effluent limitations or pretreatment standards, or the provisions of a wastewater discharge permit, the city may require the user to submit for approval, with such modifications as it deems necessary, a detailed time schedule of specific actions, which the user shall take in order to prevent or correct a violation of requirements. (Priorcode § 20-36)

13.12.590
Appeals.

A. Any user, permit applicant, or permit holder affected by any decision, action or determination, including cease and desist orders, made by the public works director, interpreting or implementing the provisions of this chapter or in any permit issued in this chapter, may file with the public works director a written request for reconsideration within twenty days of such decision, action or determination, setting forth in detail the facts supporting the user's request for reconsideration. The public works director may accept the application, reject the application for sound reasons or direct the applicant, at applicant's sole expense, to maintain and operate in a manner satisfactory to the public works director such indicating or integratingmeters as may be required to properly measure the flow, establish sampling equipment, tests and procedures satisfactory to the public works director to determine the characteristics of the wastes.

B. If the ruling made by the public works director is unsatisfactory to the person requesting reconsideration, the person may, within twenty days after notification of the city's action, file a written appeal to the city council. The written

appeal shall be heard by the council within twenty days from the date of filing. The city council shall make a final ruling on the appeal within twenty days of the hearing. The public works director's decision, action or determination shall remain in effect during such period of reconsideration. (Prior code § 20-37)

13.12.600
Liability. Any person, firm or corporation, or any partner, officer, agent or employee thereof, who deposits or permits to be deposited into the city's sewerage system any wastes other than those permissible under the terms of this chapter and the terms of a valid permit granted under this chapter is liable for any and all damage caused to the city by virtue of such act, including compensation for damage to the city's facilities, and all costs of any legal fees, suits or judgments against the city which may be attributable to such wastes so discharged. (Prior code § 20-38)

13.12.610
Injunction. Whenever a discharge of wastewater is in violation of the provisions of this chapter or otherwise causes or threatens to cause a condition of contamination, pollution or nuisance, the city may petition the superior court for the issuance of a preliminary or permanent injunction, or both, as may be appropriate in restraining the continuance of such discharge. (Prior code § 20-39)

13.12.620
Damage to sewerage system-Charge. When a discharge of wastewaters or any other substance causes an obstruction, damage or any other impairment to the city's sewerage system, the city shall assess a charge against the user for the work, materials, and services required to clean or repair the affected portions of the sewerage system. (Prior code § 20-40)

13.12.630
Civil penalties. Any person who violates any provision of this chapter or permit condition or who discharges wastewater which causes pollution, or who violates a cease and desist order, prohibition, effluent limitation, national standard of performance, pretreatment or toxicity standard shall be liable civilly to a penalty not to exceed six thousand dollars for each day in which such violation occurs. The city attorney, upon order of the city council, shall petition the superior court to impose, assess and recover such sums. (Prior code § 20-41)

13.12.640
Termination of service. The city may revoke any wastewater discharge permit, or terminate or cause to be terminated wastewater service to any premises, if a violation of any provisions of this chapter is found to exist or if a discharge of

wastewater causes or threatens to cause a condition of contamination, pollution or nuisance as defined in this chapter. The city also reserves the right to immediately disconnect any user, upon informal notice only, in the event of an unlawful discharge which may cause imminent danger to human health, the environment, or which threatens to interfere with the treatment plants operation. This provision is in addition to other statutes, rules or regulations, authorizing termination of service for delinquency in payment.
(Priorcode § 20-42)

13.12.650
Public notice of violation. In accordance with Federal Pretreatment Regulations 40 CFR 403 the city shall publish, at least annually in the largest daily newspaper circulated in the service area, a description of those industrial users which are found to be in significant violation with any provisions of this chapter or any permit or order issued hereunder during the period since the previous publication.

SECTION 2. All ordinances and parts of ordinances in conflict herewith are repealed insofar as such conflict may exist.

SECTION 3. This ordinance shall be published one time in the "Lodi News Sentinel", a daily newspaper of general circulation printed and published in the City of Lodi and shall be in force and take effect thirty days from and after its passage and approval.

Approved this 28th day of November 1990

JOHN R. SNIDER
Mayor

Attest :

LICE M. REIMCHE
City Clerk

State of California
County of San Joaquin, ss.

I, Alice M. Reimche, City Clerk of the City of Lodi, do hereby certify that Ordinance No. 1501 was introduced at a regular meeting of the City Council of the City of Lodi held November 7, 1990 and was thereafter passed, adopted and ordered to print at a regular meeting of said Council held November 28, 1990 by the following vote:

Ayes :	Council Members -	Hinchman, Olson, Pinkerton, Reid and Snider (Mayor)
Noes:	Council Members -	None
Absent:	Council Members -	None
Abstain :	Council Members -	None

I further certify that Ordinance No. 1501 was approved and signed by the Mayor on the date of its passage and the same has been published pursuant to law.

ALICE M. REIMCHE
City Clerk

Approved as to Form

BOBBY W, McNATT
City Attorney

ORDINANCE NO. 1613

AN ORDINANCE OF THE CITY OF LODI REPEALING CHAPTER 13.12 OF THE LODI MUNICIPAL CODE AS CURRENTLY ENACTED, AND REENACTING THIS TITLE RELATING TO SEWER SERVICE

BE IT ORDAINED BY THE LODI CITY COUNCIL AS FOLLOWS:

Article I. General Provisions

13.12.010

Purpose and policy. These wastewater discharge regulations set uniform requirements for discharges of domestic, industrial waste and storm drainage water into the City sewerage system to enable the City to comply with the administrative provisions of the Clean Water Grant Regulations, water quality requirements set by the Regional Water Quality Control Board and the applicable effluent limitations, national standards of performance, toxic and pretreatment effluent standards, and any other discharge criteria which are required or authorized by state or federal law, and to derive the maximum public benefit by regulating the quality and quantity of wastewater discharged into those systems. (Ord. 1501 § 1 (part), 1990)

13.12.020

Definitions. Unless otherwise defined in this chapter, terms shall be as adopted in the latest edition of Standard Methods for the Examination of Water and Wastewater, published by the American Public Health Association, the American Water Works Association, and the Water Environment Federation. Waste constituents and characteristics shall be measured by the approved methods as defined below. The following words shall have these meaning(s):

1. "Approved methods" means the analytical methods listed in the Federal Register 40 CFR Part 136, unless expressly stated, or as established by federal or state regulatory agencies.

2. "Bedroom(s)" means room(s) of a residential user designed or used primarily for sleeping purposes, as determined by the City, based on criteria such as those rooms having closets.

3. "Biochemical oxygen demand (BOD)" means the amount of dissolved oxygen required to meet the metabolic needs of aerobic microorganisms in water containing organic matter as determined by approved methods and, unless otherwise noted, exerted in a period of five days at twenty degrees Celsius.

4. "By-pass" means an intentional diversion of waste or wastewater from any portion of an industrial user's treatment facility.

5. "Capacity fee" means a charge as described in this chapter, levied on construction, or on new, expanded or ongoing activity, which uses POTW capacity. The fee is normally paid at the time of issuance of a building permit.

6. "Chemical oxygen demand (COD)" means the oxygen equivalent of that portion in a sample that is susceptible to oxidation by a strong chemical oxidant as determined by approved methods.

7. "Commercial user" means any user of the sewerage system except those specifically classified as residential user or industrial user.

8. "Community sewer or collection system" means a sewer owned and operated by the City tributary to the treatment plant. It includes, but is not limited to, sanitary and industrial, pumping stations, siphons, canal crossings, manholes, and sewers leading from the property line or easement line to the collection sewer.

9. "Compatible pollutant" means biochemical oxygen demand, suspended solids, and fecal coliform bacteria, plus additional pollutants identified in the City's National Pollutant Discharge Elimination System (NPDES) permit.

10. "Contamination" means an impairment of the quality of the receiving waters by waste to a degree which creates a hazard to the public health through poisoning or through the spread of disease.

11. "Dissolved solids" means residue upon evaporation of water after filtration as determined by approved methods. Also termed "total dissolved solids" or "TDS".

12. "Domestic sewage" means the waterborne wastes derived from the ordinary living processes and of such character as to permit satisfactory disposal, without special treatment, into the domestic system.

13. "Domestic system or sanitary sewer system" means a portion of the sewerage system and treatment facility used primarily for domestic sewage.

14. "Employee" means, for "unit of measure" purposes, the total number of all classifications of employees from all shifts that physically work at the site producing the wastewater discharge. Temporary or part time employees shall be prorated to their time equivalent to a full time employee.

15. "Federal Act or Federal Regulations" means the Federal Water Pollution Control Act, PL 92-500, and any amendments thereto; as well as any guidelines, limitations and standards promulgated by the Environmental Protection Agency pursuant to the Act including the Federal Register, 40 CFR Subchapter IV for pretreatment regulations and the Federal Clean Water Act.

16. "Fixed total dissolved solids" means residue upon evaporation of water and heating to five hundred and fifty degrees centigrade after filtration as determined by approved methods.

17. "Gpd or g p d means gallons per day.

18. "High strength user" means a user with discharge volume in excess of 2.0 MGY or a daily average waste strength in excess of the limitations in Section 13.12.110 or in excess of either three hundred milligrams per liter BOD or three hundred milligrams per liter SS or nine hundred milligrams per liter COD or as determined by the Public Works Director.

19. "Holding tank waste" means any domestic waste from holding tanks, contained in vessels. chemical toilets, campers, trailers, septic tanks, vacuum tank trucks, or other stationary or mobile sources.

20. "Industrial system" means the portion of the sewerage system used primarily for industrial waste which discharges directly into the ponding and irrigation system at the treatment plant.

21. "Industrial user" means a user subject to regulation by Clean Water Act Section 307(b), (c), or (d) or 40 CFR 403.3(g) and (h) who discharges industrial waste into the sewerage system.

22. "Industrial waste" means the waterborne waste and wastewater from any production, manufacturing or processing operation of whatever nature, including institutional and commercial operations, where water is used for the removal of significant quantities of waste other than from human habitation of premises connected to the domestic or industrial sewers. Contents of chemical toilets, septic tanks, waste holding tanks and waste sumps shall be classed as industrial waste.

23. "Interference" means the inhibition or disruption of the sewer system, treatment processes or operations of the treatment plant which contributes to the violation of its discharge requirements including

inhibition or disruption of sludge disposal practices or compliance with any of the statutory authorities listed in the Federal Register 40 CFR Part 403.3(i).

24. "mgd or MGD" is the abbreviation for million gallons per day.

25. "MGY" is the abbreviation for million gallons per year.

26. "Mass emission rate" means the weight of material discharged into the sewerage system during a given time interval. Unless otherwise specified, the mass emission rate shall mean pounds per day of a particular constituent or combination of constituents.

27. "Moderate strength user" means users with a wastewater strength of less than three hundred milligrams per liter of BOD and SS and having a waste flow less than 2.0 MGY.

28. "National Pretreatment Standard, Pretreatment Standard, or Standard" means any regulation containing pollutant discharge limits promulgated by the EPA in accordance with Clean Water Act section 307(b) and (c) which applies to Industrial Users. This term includes prohibitive discharge limits established pursuant to 40 CFR 403.5.

29. "Natural outlet" means any outlet into a watercourse, ditch, pond, lake or other body of surface water or groundwater.

30. "New source" means an industrial user discharging, or planning to discharge, from a source at which:

1) Construction is carried out at a site at which no other source is located.

2) Construction totally replaces the process, or production equipment that produces, the wastewater at an existing source, or

3) The wastewater producing process constructed is substantially independent of an existing source at the same site.

31. "Nuisance" means anything which is injurious to health, or is offensive to the senses, or an obstruction to the free use of property so as to interfere with the comfort or enjoyment of life or property, or which affects at the same time an entire community or neighborhood or any considerable number of persons, although the extent of the annoyance or damage inflicted upon individuals may be unequal.

32. "Pass through" means the introduction of a pollutant by a user into the sewerage system which leaves the treatment plant in quantities or concentrations that alone or in conjunction with other sources, cause a violation of the City's discharge requirements.

33. "Permit" means wastewater discharge permit issued by the Public Works Department.

34. "Person" means any individual, partnership, firm, association, corporation or public agency, including the State of California and the United States of America.

35. "pH" means the negative logarithm of the hydrogen-ion activity in moles per liter of solution as determined by approved methods.

36. "Pollutant" means any substance which can cause pollution.

37. "Pollution" means an alteration of the quality of the receiving waters by waste to a degree which unreasonably affects such waters for beneficial use or facilities which serve such beneficial uses. Pollution may include, but not be limited to, contamination.

38. "Pretreatment" means the treatment or flow limitation of industrial wastes prior to discharge into the City sewerage system.

39. "Private sewer, building sewer or house service sewer" means that part of the building sewer beginning at the junction, thereof, with the building plumbing or drainage system and terminating at the property line or at the easement line.

40. "Publicly Owned Treatment Works (POTW)" means any devices and systems used in the storage, treatment, recycling and reclamation of municipal sewage or industrial wastes of a liquid nature. This includes sewers, pipes, and other conveyances if they convey wastewater to a POTW treatment plant.

41. "Residential user" means a single-family house or each unit of a duplex, flat, group dwelling, apartment or any other living accommodation which has facilities for sleeping and the preparation of food. whether sanitary facilities connected to the collection system are provided for the occupants, thereof, whether or not such sanitary facilities are installed therein or connected thereto; living accommodations designed or used for short-term transient lodging which are rented to other than the controlling occupant of the premises shall be considered as a commercial unit.

42. "Settleable solids" means that portion of matter present in sewage, industrial waste or waters introduced into the storm drains that readily settles out of the carrier liquid in a quiescent state as determined by approved methods.

43. "Sewage" means the waterborne wastes received from human habitation and use of premises for residential, commercial. institutional and industrial purposes.

44. "Sewage service charge" means a regular charge for each user based upon each **user's** proportional use of the sewerage system.

45. "Sewage service unit or SSU is defined as each increment of flow equal to the flow from an average two-bedroom residence (two hundred and six gallons per day) and having a strength less than three hundred milligrams per liter BOD and SS.

46. "Sewer" means a pipe or conduit which carries sewage and/or industrial wastes and to which storm, surface and ground waters are not intentionally admitted. When used in this chapter, "sanitary sewer" means those pipelines operated primarily for the collection of domestic sewage. "Industrial sewer" means those pipelines operated primarily for the collection of industrial waste.

47. "Sewerage system" means all works for collecting, pumping, treating, disposing, storing or reclaiming sewage, industrial waste and/or storm water.

48. "Significant user" means all industrial users subject to Categorical Pretreatment Standards under 40 CFR **403.6** and 40 **CFR** Chapter **I,** Subchapter **N;** and any other industrial user that: discharges an average of 25,000 gallons per day or more of process wastewater to the POW (excluding sanitary, noncontact cooling and boiler blowdown wastewater); contributes a process wastestream which makes up 5 percent or more of the average dry weather hydraulic or organic capacity of the POW treatment plant; or is designated by the Public Works Director on the basis that the industrial user has a reasonable potential for adversely affecting the POTW's operation or for violating any pretreatment standard or requirement.

49. "Slug" means a sudden large increase or decrease (factor of two or more) from normal waste volume or concentration.

50. "Slug discharge" means any discharge of a non-routine. episodic nature including but not limited to, an accidental spill or a non-customary batch discharge.

51. "Storm drain system" means any portion of the sewerage system used for the conveyance of stormwater or surface or subsurface drainage water.

52. "Storm sewer" means those pipelines operated primarily for the collection of **stormwaters.53.** "Suspended solids" or "S S or 'TSS" means that portion of residue present in sewage, industrial waste, or waters introduced into the storm drains that is retained on a filter (nonfilterable) as determined by approved methods.

54. 'Treatment plant' means the White Slough Water Pollution Control Facility of the City, and includes but is not limited to the domestic sewage treatment facilities, industrial waste treatment facilities, sludge disposal facilities, and irrigatable lands.

55. "Unpolluted water" means water to which no constituent has been added, either intentionally or accidentally, which would render such water unacceptable to the agency having jurisdiction, thereof, for disposal to the storm drain system or natural drainages or directly to surface waters.

56. "User" means any person that discharges, causes or permits the discharge of wastewater or stormwater into a sewerage system.

57. 'Waste" includes sewage and any and all other waste substances, liquid, solid, gaseous, or radioactive, associated with human habitation, or of human or animal origin, or from any producing, washing, manufacturing or processing operation of whatever nature, including such waste placed within containers of whatever nature prior to, and for purposes of, disposal.

58. 'Wastewater means waste and water, whether treated or untreated, discharged into or permitted to enter a sewer.

59. 'Wastewater constituents and characteristics" means the individual chemical, physical, bacteriological and radiological parameters and such other parameters that serve to define, classify or measure the contents, **quality** and strength of wastewater as determined by a state certified laboratory, and the volume, rate of Row or other parameters that serve to define quantity.

60. 'Wastewater discharge permit" means a permit issued by the City for a user to discharge into a sewerage system. (Prior code 20-2)

Article II. Discharge Restrictions

13.12.030

Prohibited discharges. **No** person shall discharge into the sewerage system, natural outlet, street or earth surface, wastes which cause, threaten to **cause,** or are capable of causing, either alone or by interaction with other substances, any of the following:

A. Fire or explosion or injury in any way to the sewerage system or the operation of the treatment plant. Prohibited materials include, but are not limited to, gasoline, kerosene, alcohols, solvents. sulfides, or any other substance with a closed cup flashpoint of **less** than 140 degrees Fahrenheit or (sixty degrees Celsius) using the test methods specified in **40 CFR** 261.21 or which causes two consecutive readings on an explosion hazard meter at any point in the sewerage system to be more than five percent (5%), or any single reading more than ten percent (10%) of the Lower Explosive Limit (LEL);

B. Obstruction of flow in a sewerage system or injury of the system or damage to the sewerage collection, or treatment facilities by ashes, cinders, sand, mud, grit, straw, offal, shavings, metal, glass, rags, feathers, tar, plastics, wood, sawdust, manure or other solid or viscous substances capable of causing obstruction of the flow or other interference with the proper operation of the sewerage system as determined by the Public **Works** Director;

C. Acute worker health and safety problems resulting from the presence of toxic gases, vapors, or fumes within **the** POTW per **40** CFR 403 5(B)(b)(7);

D. A nuisance or prevention of the effective maintenance or operation of the sewerage system, through having or creating a strong, unpleasant odor;

E. Air pollution by the release of toxic or malodorous gases or malodorous gas-producing substances;

F. Interference or pass through at the treatment plant affecting wastewater treatment, land disposal, or sludge or scum processing and disposal;

G. A detrimental environmental impact or a nuisance in the waters or wastewaters of the state or a condition unacceptable to any public agency having regulatory jurisdiction over the *City;*

H. Discoloration, or any other condition, in the quality of the City's treatment plant effluent and/or storm system discharge in such a manner that receiving water quality requirements established by law or other contracts cannot be met by the City;

I. Conditions at or near the City treatment facilities which violate any statute or rule, regulation or ordinance of any public agency of state or federal regulatory body;

J. Quantities or rates of flow or pollutants which cause interference or overload the City's sewerage system or treatment facilities or cause excessive City collection or treatment costs or hamper treatment facility operation;

K. Pollutants which can cause corrosive structural damage to the sewerage system or treatment facilities, but in no case a pH lower than 5.0 is allowed per federal regulations;

L. Influent to the treatment plant to be over one hundred four degrees fahrenheit (forty degrees Celsius);

M. Waters or waste with a pH factor lower than 6 or higher than 10;

N. Any discharge which has an average daily concentration exceeding the following technically based local limits:

Toxicant	Maximum Allowable Concentration (mg/L)
Arsenic	2.5
Cadmium	0.5
Chromium, total	29
Copper	3.0
Cyanide, total	1.4
Lead	4.0
Mercury	0.8
Nickel	13
Silver	2.9
Zinc	3.5

O. Discharges of new or increased contributions of pollutants, or changes in the nature of pollutants, to the POTW by Industrial Users where such contributions do not meet applicable Pretreatment Standards and Requirements or where such contributions would **cause** the POTW to violate its NPDES permit per 40 CFR 403.8(f)(1)(i);

P. Petroleum oil, nonbiodegradable cutting oil, or products of mineral oil origins in amounts that will cause interference or pass through;

Q. Discharges which, if otherwise disposed of, would be a hazardous waste under 40 CFR Part 261;

R. Discharges containing concentrations of tetrachloroethylene (PCE) or trichloroethylene (TCE) exceeding five micrograms per liter for any grab sample. (Ord. 1501 § 1(part), 1990)

13.12.040

Storm drainage and groundwater. Rainwater, groundwater, street drainage, subsurface drainage, roof downspouts, exterior foundation drains, groundwater from cleanup operations, or other sources of drainage water shall not be discharged through direct or indirect connections into a domestic system. (Ord. 1501 § 1 (part), 1990)

13.12.060

Septic tanks. No person shall use a septic tank for disposal of wastewater if the property to be served is within one hundred feet of the domestic system unless permitted by the Public Works Director. Where such domestic sewer exists and buildings are inhabited or used by human beings, the property owner(s) shall install lateral service connection(s) in accordance with this chapter. (Ord. 1501§ 1 (part), 1990)

13.12.070

Radioactive wastes. No person shall discharge or cause to be discharged any radioactive waste into a sewerage system except:

A When the person is authorized to use radioactive materials by the State Department of Health or other governmental agency empowered to regulate the use of radioactive materials; and

B. When the waste is discharged in strict conformity with current California Radiation Control Regulations (California Administrative Code, Title 17) and the Nuclear Regulatory Commission regulations and recommendations for safe disposal; and

C. When the person is in compliance with all rules and regulations of all other applicable regulatory agencies. (Ord. 1501§ 1 (part), 1990)

13.12.080

Garbage grinders.

A. Wastes from garbage grinders shall not be discharged into a domestic sewer system except:

1. Wastes generated in normal preparation of food by residential users; or

2. Where the user has obtained a permit for that specific use from the City, and agrees to undertake whatever self-monitoring is required to enable the Public Works Director to equitably determine the user charges based on the waste constituents and characteristics.

B. Garbage grinders must shred the waste to a degree that all particles will be carried freely under normal flow conditions prevailing in the domestic sewer. Garbage grinders shall not be used for grinding plastic, paper products, inert materials or garden refuse. (Ord. 1501§ 1 (part), 1990)

13.12.090

Direct discharge - Use of service sewer. No person shall discharge any substances directly into a manhole or other opening in a sewerage system except through an approved private sewer or house sewer lateral. (Ord. 1501 § 1 (part), 1990)

13.12.100

Holding tank waste. A user proposing to discharge holding tank domestic waste into a domestic sewer must secure a permit for each separate discharge. This permit shall state the specific location of discharge, the time of day the discharge is to occur, the volume of the discharge, the wastewater constituents and characteristics and origin of such wastes. Holding tank wastes discharged at the treatment plant facilities may be given a discharge permit which would apply to more than one separate discharge at the discretion of the Public Works Director. If a permit is granted for discharge of such waste into the domestic sewer, the user shall pay the applicable user charges and fees and shall meet such other conditions as required by the Public Works Director. (Ord. 1501 § 1 (part), 1990)

13.12.110

Restricted discharges. No person shall discharge or cause to be discharged to a sewerage system any of the following without first obtaining a wastewater discharge permit that specifically permits such waste discharge characteristics:

A. Discharges containing metal pickling or etching wastes or plating solutions, whether neutralized or not;

B Discharges containing phenols or other taste-producing and odor-producing substances in concentrations exceeding limits which may be established by the Public Works Director as necessary to meet water quality requirements;

C. Slug discharges into the collection system at temperatures exceeding one hundred forty degrees Fahrenheit (sixty degrees Celsius) or exceeding one hundred ten degrees Fahrenheit (forty-three degrees Celsius) for any eight-hour period;

D. Materials which exert or cause in the sewerage system or receiving waters unusual concentrations either of inert suspended solids (such as, but not limited to, soil solids, fuller's earth, lime slurries, lime residues, plastics, or ash);

E. Discharges containing fixed total dissolved solids (such as, but not limited to, sodium chloride, sodium sulfate, or other inorganic salts) in such quantities to cause the effluent TDS of the treatment plant to exceed five hundred milligrams per liter. (Ord. 1501§ 1 (part), 1990)

13.12.115

Grease, oil, and sand interceptors. Grease, oil, and sand interceptors shall be provided by the discharger when they are necessary for the proper handling of wastes containing grease in excess of one hundred fifty milligrams per liter of animal and vegetable origin and fifty milligrams per liter of mineral origin, or any flammable wastes, sand, grit and other harmful ingredients. All interceptors shall be of a type and capacity approved in writing, prior to installation, by the Public Works Director, and shall be located so as to be readily and easily accessible for cleaning and inspection. Grease and oil interceptors shall be constructed of impervious material scapable of withstanding abrupt and extreme changes in temperature. They shall be of substantial construction, watertight, usually a minimum of one thousand gallons and equipped with easily removable covers which, when bolted in place, are gastight and watertight. Grease and/or oil/sand interceptors shall be constructed in any place or building having a capacity to serve group meals or commercial and industrial cleaning facilities. Where installed, all grease, oil, sand and grit interceptors shall be maintained by the owners at owner's expense in continuous efficient operation at all times. Materials collected shall not be reintroduced into the sewerage system. Records of all maintenance, cleaning, and hauling of materials shall be maintained by the owner and such records shall be available at all times for inspection by City personnel. (Ord. 1501§ 1 (part), 1990)

13.12.120

Federal pretreatment requirements. Users in industrial categories subject to the categorical pretreatment standards development by the EPA under the Clean Water Act of 1977 (PL 95 217) 33 U.S.C. 1251 et seq.

are required to achieve limitations based on Best Practical Control Technology (BPT) immediately and Best Available Technology Economically Achievable (BAT) by July 1, 1983, in accordance with Sections 301 and 304. New sources are required to comply with New Source Performance Standards (NSPS) based on Best Available Demonstrated Control Technology (BDT) for industrial users in terms of concentration and equivalent mass values. Users must comply with pretreatment standards promulgated pursuant to Section 307 and the Federal register 40 CFR Subchapter IV. Dilution of any discharge may not be used to comply with any pretreatment standards. Categorical industrial users must submit Baseline Monitoring Reports, compliance schedule reports, 90 day compliance reports, and periodic reports on continued compliance as required including identifying information per 40 CFR 403.12(1) and such reports must be signed by an authorized representative of the industrial user and meet certification requirements of 40 CFR 403.6(a)(2)(ii) and 403.12(b)(6) and be retained for a minimum of three years (or period of litigation, whichever is longer). The City may issue standards more stringent than the federal standards if the Public Works Director determines that the limitations in the federal standards are not sufficient to:

A. Protect the operation of the City's treatment facilities; or

B. Comply with water quality standards, sludge disposal or effluent limitations specified in the City's National Pollutant Discharge Elimination System (NPDES) permit.

C. Meet technically based local limits, which must be calculated per federal pretreatment program guidelines. The City must annually provide public notification of industrial users which during the previous 12 months significantly violated applicable pretreatment standards. (Ord. 1501 § 1 (part), 1990)

13.12.130

Industrial waste permits. Source control of industrial discharges shall be accomplished by use of a permit and monitoring system as described in this chapter. Discharge of industrial waste from any person within the City onto land or to any natural outlet may be permitted only if the discharge complies with all requirements of the Regional Water Quality Control Board and of all other local, state and federal laws and regulations. (Ord. 1501 § 1 (part), 1990)

13.12.140

Other legal restrictions. Nothing contained in this chapter shall be construed to limit any additional requirements that may be imposed by the County Health Officer, by the Regional Water Quality Control Board, Fish and Game, or by other governmental agencies having jurisdiction. (Ord. 1501 § 1 (part), 1990)

13.12.150

Connections outside City. No discharge from facilities or properties outside the limits of the City shall be allowed into the sewerage or storm drainage systems. (Ord. 1501 § 1 (part), 1990)

13.12.160

Screening of industrial waste. No person shall discharge or cause to be discharged to the industrial system an industrial waste that is too large to pass through or, has not been pretreated by being passed through, a screening device with a maximum screen opening of 1.5 millimeters. (Ord. 1501 § 1 (part), 1990)

Article III. Service Charges and Capacity Fees

13.12.170

Classification. All users shall be classified for wastewater collection. treatment and disposal purposes in accordance with the principal activity conducted by the person, or the quantity and quality of discharge, as determined by the Public Works Director. The purpose of classification is to facilitate the regulation of wastewater discharge based on quantity and quality of flow, to provide an effective means of industrial waste source control, and to establish a system of sewage service charges and capacity fees which will ensure, but not be limited to, the recovery of City capital, operating and maintenance costs in an equitable manner. It is the responsibility of the user to provide the City a reasonable estimation of wastewater quantity and quality, or other applicable units of measure, and any increases thereof, for the purpose of classification and assessment of service charges and capacity fees. (Ord. 1501 § 1 (part), 1990)

13.12.180

Domestic system service charges.

A Basis. Charges for use of the domestic system shall be determined by the volume, biochemical oxygen demand (BOD) and suspended solids (SS) of wastes discharged.

B. Applicability. Those residential, commercial and industrial users whose discharge of wastes classify them as a moderate-strength user and those dischargers of industrial and commercial wastes that classify as high-strength users shall pay charges as determined in this section. Determination of the category for each specific user shall be made by the Public Works Director.

C. Moderate-strength Users. All moderate-strength users shall be assigned sewage service units. The minimum sewage service units assigned to any commercial and industrial user shall be 1.0 unit. Service charges for moderate-strength users shall be determined by multiplying the cost of one sewage Service unit by the number of sewage Service units assigned to each user.

1. Residential user sewage service units shall be based upon the number of bedrooms per dwelling unit as follows:

Number of Bedrooms	Sewage Service Units
1	0.75
2	1.00
3	1.25
4	1.50
5	1.75
6	2.00
7	2.25

2. Commercial and industrial user sewage service charges shall be based on the number of sewage service units assigned to each user. The unit of measure for determining the number of sewage service units assigned to each user are as follows:

User Description	Unit of Measure

1.	Meeting place, religious	Each 200 seats
2.	Meeting place, public	Each 100 seats
3.	Hotel, motel without kitchenettes	Each 3 beds
4.	Hotel, motel with kitchenettes	Each unit
5.	Veterinary clinic	Each 4 employees
6.	Post office	Each 15 employees
7.	Funeral parlor	Each 3 employees
a.	Service station with service garages	Each 2.5 pumps
9.	Service station without service garages	Each 7 pumps
10.	Car wash, automatic bay	20 SSU's per bay
11.	Car wash, self serve bays	2 SSU's per bay
12.	School, 8th grade and below	Each 20 students
13.	High school	Each 15 students
14.	Eating place, seating only	Each 10 seats
15.	Eating place, seating and take-out.	Each 7 seats
16.	Eating place, "pizza parlor"	Each 35 seats
17.	Eating place, take-out only	Each 5 employees
18.	Lunch truck business	Each 5 employees
19.	Laundry, coin-op., reg. mach.	Each 1.5 machines
20.	Laundry, coin op., big mach.	Each machine
21.	Comm. laundry and dry cleaning	Each 3 employees
22.	Dentist's office	Each 5 employees
23.	Office, store, warehouse, manufacturer, Doctor's, Chiropractor's and X-ray offices	Each 8 Employees
24.	Grocery Store, Supermarket (Having veg/fruit or butcher/meat sections)	Each 4 employees

25.	Bar	Each 20 seats
26.	Barber, beauty shop	Each 3 workstations
27.	Hospital, convalescent home	Each 3 beds
28.	Rest and retirement home	Each 3 beds
29.	Mobile home park	Each 1.33 pads
30.	RV dump station	Each station

One sewage service unit shall be assigned to each unit of measure. Fees shall be based on a minimum of one sewage service unit and fractions of sewage service units thereafter. At the discretion of the Public Works Director, a commercial user's service charges and/or capacity fees may be based on actual wastewater discharge flows estimated by use of an influent water meter or other appropriate means.

D. High-strength Users.

1. All high-strength user sewage service charges shall be determined based upon the actual quantity of flow, BOD, and SS discharged annually.

2. The sewage service charge shall be determined by multiplying the quantity of discharged flow, BOD, and SS by the cost for each characteristic. (Ord. 1501§ 1(part), 1990)

E. Significant users.

All significant users shall be assessed two additional sewage service units in service charges to cover the City's costs of meeting Federal Pretreatment Program requirements.

13.12.190

Domestic system capacity fees. The capacity fee shall cover the capital cost associated with the POTW capacity which will be utilized by the discharger. Any actual costs incurred by the City in making the physical connection (tap) shall be separate and in addition to the capacity fee described in this section.

A. Moderate-strength user capacity fees shall be based on a rate per sewage service unit as assigned under Section 13.12.180. The capacity fee for a new commercial or industrial user shall be a minimum of one sewage service unit, and additions or modifications shall be prorated to fractions of sewage service units.

B. High-strength user capacity fees shall be based on a unit rate for flow, BOD and SS. The estimated annual quantities of each characteristicshall be justified to, and approved by, the Public Works Director for the purpose of determining the capacity fee. (Ord. 1501 § 1 (part). 1990)

C. City projects and projects funded by the City are exempt from capacity fees as described in this section.

13.12.195

Downtown business district capacity fees.

A. The City council finds and declares that the downtown area of Lodi as defined in this part, which is the traditional center of the City's business community, is presently in danger of losing economic viability. The purpose of this section is to protect a crucial part of Lodi's economy and preserve a portion of the City's heritage by offering incentives for businesses to locate, relocate or expand existing commercial uses within this area.

B. For purposes of this section, the "downtown business district" shall mean an area whose boundaries are the same as those for the area subject to the City of Lodi Bond issue, Series 1984-1, dated May 24, 1984, more particularly described in the bond documents and map on file with the City clerk's office.

C. Any permitted commercial use which locates, relocates or expands within the downtown business district as defined shall be responsible for a maximum capacity fee not to exceed that for two sewage service units (SSU's) where the SSU's (or equivalent SSU's) being assessed, as established in Section 13.12.190 of this code are eight or less SSU's. If the SSU's (or equivalent SSU's) being assessed are greater than eight, the commercial use shall be responsible for two SSU's plus the assessed (or equivalent) SSU's over eight.

D. Notwithstanding any exemption granted under this section, the monthly or annual sewage fees set by City council from time to time for any commercial use locating, relocating or expanding within the downtown business district, shall be calculated on the full number of sewage service units which the use would have otherwise been responsible for under Section 13.12.180 of this code if such use was located outside the downtown business district. (Ord. 1511 § 1, 1991)

13.12.200

Industrial system service charges.

A. Industrial system sewage service charges shall be determined based upon the actual quantity of flow and BOD discharged annually. The unit cost for each characteristic will be determined annually and multiplied by each user's measured effluent characteristics. The total of the two characteristic fees shall be the annual sewage service charge.

B. The unit cost for each characteristic shall be determined by distributing the total operation, maintenance and capital costs to each characteristic at a proportionate rate and dividing each proportionate cost by the total annual quantity of each characteristic discharged to the system. (Ord. 1501 § 1 (part), 1990)

13.12.210

Industrial system capacity fees. Fees shall be determined on an individual basis by the Public Works Director and shall be, in part, based upon the value of existing capacity to be utilized and/or the cost of providing additional new capacity. The capacity fee shall be based on a unit rate for flow and BOD.

(Ord. 1501 § 1 (part), 1990)

13.12.215

Adjustments and additions.

A Service charge adjustments. When it is found that a reasonable estimation of wastewater quantity or quality, or other applicable units of measure, have not been used for the assessment of sewage service charges the City has the right to make adjustments as determined by the Public Works Director. Underchargesfor the period of incorrect billing up to three years, per California Code of Civil Procedures, Section 338, are due and payable on demand and overcharges will be credited.

B. Capacity fee adjustments. Any user, after one full year of operating data is available, may request the Public Works Director to make an adjustment, or the Public Works Director may institute an adjustment, if a significant variation exists between the estimated and actual wastewater quantity or quality, or other

applicable units of measure. Increases in capacity fees shall be due and payable on demand at the time the Public Works Director makes the fee adjustment and decreases will be credited.

C. Capacity fee additions. When a user has in the opinion of the Public Works Director significantly increased either wastewater quantity or quality or units of measure over what was used for all previous capacity fee calculations, additional capacity fee charges shall be assessed for the additional wastewater treatment capacity utilized. Such additional capacity fees shall be due and payable on demand at the current rate at the time the Public Works Director makes the determination. (Ord. 1501 § 1(part). 1990)

13.12.220

Storm drain and cooling water service charges.

A. The rate for disposal of stormwaters, cooling water discharges, or construction flush waters into the City's storm drain system will be established by resolution.

B. The City shall estimate and determine the amount of storm, cooling water or construction flush waters deposited into the City's storm drains unless the user of the service elects to provide, install and maintain in good working order an integrating meter satisfactory to the City for the purposes of measuring such storm, cooling water or construction flush waters.

C. In determining the amount of storm, cooling water or construction flush waters deposited into the City's storm drain system, no charge shall be made for the storm waters or minor irrigation waters or drainage from roofs, pavements or hard-surfaced areas within the City limits. Where such drainage is metered along with Construction flush water, a credit of one thousand two hundred fifty gallons per year for each one hundred square feet, as projected and measured upon a horizontal plane, of such drainage area tributary to the meter shall be allowed. Where roofs or other areas are sprinkled or flushed, such flushing or sprinkling waters shall be included in the quantities for billing purposes. (Ord. 1501 § 1(part), 1990)

13.12.230

Holding tank waste charges. The charge for a discharge of holding tank wastes shall be based on the method for determining charges for the high strength user in the domestic system as outlined in Section

13.12.180(D). Characteristics of BOD and SS shall be determined by random sampling of holding tank waste discharges. (Ord. 1501 § 1 (part), 1990)

13.12.240

Charges and fees. The schedule of charges and fees for domestic system service charges and capacity fees, industrial system service charges and capacity fees, storm drain service charges, inspection sampling and analysis charges, and holding tank waste charges will be those established and adopted by the City council from time to time by resolution. (Ord. 1501 § 1 (part), 1990)

13.12.250

Billing and collections. All billing and collections for service charges shall be per Section 13.04.030 of this code. (Ord. 1501 § 1 (part), 1990)

13.12.260

Appeals. The owner or occupants of any premises who finds that the charges and/or fees provided for in this article are unjust or inequitable may make application to the Public Works Director to have the fees modified, in accordance to Section 13.12.590. A commercial or industrial discharger, after one full year of operating data is available, may request the Public Works Director to make an adjustment, or the Public Works Director may institute an adjustment, if a significant variation exists between the estimated and actual quantities for each characteristic. Increases in capacity fees shall be due and payable on demand at the time the Public Works Director makes the fee adjustment and decreases will be credited. Increases or decreases in sewage service charges shall be implemented in the next billing following the determination by the Public Works Director that adjustment is appropriate.

Where water usage is metered, the estimated sewer flows may be compared to a two-bedroom residence (one SSU) to determine or adjust the capacity fee or sewage service charge. (Ord. 1501 § 1 (part), 1990)

Article IV. ConstructionGenerally.

13.12.270

Permit. No unauthorized person shall uncover, make any connection with or opening into, use, alter or disturb any sewerage system or appurtenances, thereof without first obtaining a written permit from the Public Works Director. (Ord. 1501§ 1(part), 1990)

13.12.280

Design standards. All construction of public sewerage systems or appurtenances thereof shall conform to the design criteria, the standard plans and specifications and the inspection and testing procedures in accordance with current City public improvement design standards. (Ord. 1501§ 1(part), 1990)

13.12.290

Application for service. Whenever a property owner is desirous of obtaining sewer service where no adequate sewer system exists, an application shall be made to the Public Works Director for sewer service in accordance with Article V of this chapter. (Ord. 1501 § 1(part), 1990)

Article V. Extensions

13.12.300

Purpose. The City council is desirous of adopting a sewer service and extension policy that is fair and equitable to all developing properties and that provides that the cost of extension shall be distributed among subsequently developing properties connecting thereto. For purposes of this article, storm drains shall be considered as sewers except as specifically stated otherwise. (Ord. 1527§ 5, 1991; Ord 1501§ 1(part), 19901

13.12.310

Application. Whenever a property owner is desirous of obtaining sewer service, an application shall be made to the Public Works Director for sewer service. The Public Works Director shall determine the closest adequate sewer and, if an extension is necessary, indicate the size of the main to be extended and the limits of the extension. (Ord. 1501 § 1 (part), 1990)

13.12.320

Applicant's obligation. Whenever the Public Works Director determines that a sewer extension is necessary, the applicant will be required to install, at the applicant's own expense, the sewer extension in accordance with engineering plans furnished by applicant and approved by the Public Works Director. The plans shall be prepared in accordance with the City design standards. (Ord. 1501 § 1 (part), 1990)

13.12.330

Extension for full frontage width. In every case where a sewer is to be tapped to serve a parcel, the same shall be extended the full frontage of the parcel unless the Public Works Director determines that the sewer will not need to be extended to serve any other properties. (Ord. 1501 § 1 (part), 1990)

13.12.340

Minimum diameter. The minimum size sewer main shall have a nominal inside diameter of six inches. The minimum size storm drain shall have a nominal inside diameter of twelve inches. Larger size mains may be required as determined by the Public Works Director in accordance with the City public improvement design standards or the City master sewer and storm drain plans. (Ord. 1527 § 7, 1991; Ord 1501 § 1 (part), 1990)

13.12.370

Reimbursement - Oversize mains. Wherever the City requires that a sewer main larger than ten inches in diameter or a storm drain larger than eighteen inches in diameter be installed in order to serve additional property or to conform to the applicable master plan, the applicant shall be reimbursed for the oversized pipe.

The reimbursement shall be based on the difference in cost between the actual pipe to be installed and a ten-inch sewer or eighteen inch storm drain as applicable. The difference in cost shall be determined by the Public Works Director. The reimbursement shall be made in accordance with Chapter 16.40.

(Ord. 1527 § 7, 1991; Ord 1501 § 1 (part), 1990)

Article VI. Administration

13.12.420

Discharge reports. In addition to the federally required reports described in section 13.12.120, the City may require that any high-strength user discharging, or proposing to discharge, wastewater into a sewerage system, file a periodic discharge report. The discharge report may include, but not be limited to, nature of process, volume, rates of Row, mass emission rate, temperature, pH, production quantities, hours of operation, number and classification of employees, chemicals and materials stored or used, or other information which relates to the generation of waste including characteristics in the wastewater discharge. Such reports shall also include the chemical characteristic and quantity of liquid or gaseous materials used annually as well as those stored on site, even though the latter may not normally be discharged. AH reports are due 14 days after the conclusion of monitoring or receipt of the laboratoty analysis report and must be signed by an authorized representative of the industrial user. All such reports shall be retained for a period of three years (or period of litigation, whichever is longer), and shall be made available for inspection and copying by the City. In addition to discharge reports, the City may require information in the form of wastewater discharge permit applications and self-monitoring reports. (Ord. 1501 § 1 (part), 1990)

13.12.430

Discharge permit - Required. All significant users proposed to connect or to discharge into a sewerage system after the effective date of the ordinance codified in this chapter must obtain a wastewater discharge permit before connecting to, or discharging into, a sewerage system. All existing significant users connected

to, or discharging into, a sewerage system must apply for a wastewater discharge permit within one hundred eighty days after the effective date of the ordinance codified in this chapter. (Ord. 1501 § 1 (part), 1990)

13.12.440

Discharge permit - Optional. The Public Works Director may issue a wastewater discharge permit to any user in accordance with the terms of this article in the following categories:

A. A user who requires the user charges and fees *to* be based on an estimation of wastewater flow;

B. Any user whose wastewater strength is less than the normal range for the user classification because of pretreatment, process changes or other reasons;

C. Any single dwelling, office, commercial business, lodge, apartment, church or multi-use building user who discharges only domestic waste. (Ord. 1501 § 1 (part), 1990)

13.12.450

Discharge permit - Application.

A. Users seeking a wastewater discharge permit shall complete and file with the Public Works Director an application in the form prescribed by the Public Works Director, and accompanied by any applicable fees. The applicant may be required *to* submit, in units and terms appropriate for evaluation, the following information:

1. Name, address and SIC number of applicant;

2. Volume of wastewater *to* be discharged;

3. Wastewater constituents and characteristics including, but not limited to, those mentioned in Article II of this chapter;

4. Time and duration of discharge;

5. Average and peak wastewater flow rates, including daily, monthly and seasonal variations, if any;

6. Any other information determined necessary by the Public Works Director to evaluate the permit application. This may include, but is not limited *to,* the following:

a. Site plans, floor plans, mechanical. and plumbing plans, water supply and discharge information and details to show all sewers and appurtenances by size, location and elevation,

b. Description of activities, facilities and plant process on the premises including all materials, processes and types of materials which are, or could be, discharged,

c. Each product produced by type, amount and rate of production,

d. Number of employees and hours of work.

B. All wastewater discharge permit applications and user reports must be signed by an authorized representative of the user and contain the following certification statement: "I certify under penalty of law that this document and all attachments were prepared under *my* direction or supervision in accordance with a system designed to assure that qualified personnel properly gather and evaluate the information submitted. Based on *my* inquiry of the person or persons who manage the system, or those persons directly responsible for gathering the information, the information submitted is, to the best of my knowledge and belief, true. accurate, and complete. I am aware that there are significant penalties for submitting false information, including the possibility of fine and imprisonment for knowing violations."

C. The Public Works Director will evaluate the data furnished by the user and may require additional information. After evaluation and acceptance of the data furnished, the Public Works Director may issue a wastewater discharge permit subject to terms and conditions provided in this article.

D. **Users** must notify the Public Works Director of any planned significant changes to the **user's** operations or system which might alter the nature, quality, or volume of its wastewater at least thirty days before the change. (Ord. 1501 § 1 (part), 1990)

13.12.460

Discharge permit - Conditions. Wastewater discharge permits shall be expressly subject to all provisions of this chapter and all other regulations, user charges and fees established by the City council. The conditions of wastewater discharge permits shall be uniformly enforced by the Public Works Director or assigned agent in accordance with this chapter, and applicable state and federal regulations. Permits may contain the following:

A. The unit charge or schedule or user charges and **fees** for the wastewater to be discharged to the sewerage system;

B. The collection of capacity fee, inspection fee and prepayment for the prorated portion of annual user charges, if collected annually;

C. The average and maximum wastewater characteristics;

D. Limits on rate and time of discharge or requirements for flow regulations and equalization;

E. Requirements for installation of inspection, monitoring, and sampling facilities;

F. Pretreatment requirements;

G. Specifications for monitoring programs which may include sampling locations, frequency and method *of* sampling, number, types as specified in 40 CFR 403 12(b)(5) and (g)(4) and standards for **tests** as specified in 40 CFR 136 and reporting schedule;

H. Requirements for submission of technical reports or discharge reports;

I. Requirements for maintaining plant records relating *to* wastewater discharge as specified by the City, and affording the City access thereto;

J. Mean and maximum mass emission rates, or other appropriate limits when incompatible pollutants (as defined in Article I of this chapter) are proposed or present in the **user's** wastewater discharge;

K. Other conditions as deemed appropriate by the Public Works Director to ensure compliance with this chapter and federal and state regulations;

L. Requirements for "slug discharge" plans as required by 40 CFR 403 8(f)(2)(v)

(Ord. 1501§ 1 (part), 1990)

13.12.470

Discharge permit - Term - Changes - Renewal. Permits shall **be** issued for a specified time period, not to exceed five years. A permit may be issued for a period **less** than a year or may be stated to expire on a specific date. A user discharging after the expiration date of the permit shall be considered in violation of this chapter. It is the responsibility of the user to apply for a new discharge permit 60 days before the expiration date of their existing permit. The terms and conditions *of* the permit may be subject *to* modification and

change by the City during the life of the permit, as limitations or requirements stipulated in this chapter are modified and changed. The user shall be informed of any proposed changes in user's permit at least thirty days prior to the effective date of change. Any changes or new conditions in the permit shall include a reasonable time schedule for compliance. (Ord. 1501 § 1 (part), 1990)

13.12.480

Discharge permit - Transfer. Wastewater discharge permits are issued to a specific user for a specific operation, A wastewater discharge permit shall not be assigned, transferred or sold to a new owner, new user, different premises or a new or changed operation without prior written approval of the Public Works Director. (Ord. 1501 § 1 (part), 1990)

13.12.490

Discharge permit - Suspension. A permit may be temporarily suspended at any time if it is the Public Works Director's opinion that the continued discharge of the waste or water into the sewerage system would substantially jeopardize the ability of the treatment facilities or sewerage system to meet water quality requirements or would cause an unsafe condition to occur. In lieu of temporary suspension of permits, the Public Works Director may impose such temporary restrictions, conditions or limitations upon the quantities, qualities and rates of discharge made thereunder as deemed necessary to assure that the receiving water quality requirements will not be violated or to alleviate the unsafe condition. Notice of the temporary suspension or the imposition of temporary restrictions. conditions or limitations shall be given in writing by the Public Works Director to the permittee at least twenty-four hours prior to their effective date. Delivery of the notice to the permittee's place of business shall constitute delivery of notice to permittee. (Ord. 1501 § 1 (part), 1990)

13.12.500

Discharge permit - Revocation. Any user who violates the following conditions of the permit or of this chapter, or applicable state and federal regulations, is subject to having this permit revoked:

A. Failure of a user to factually report the wastewater constituents and characteristics of their discharge;

B. Failure of the user to report in advance significant changes in operations or wastewater constituents and characteristics;

C. Refusal of reasonable access to the user's premises and/or records for the purpose of inspection or monitoring of all possible sources of pollution;

D. Failure to pay City utility bills;

E. Violation of conditions of the permit. (Ord. 1501 § 1 (part), 1990)

13.12.510

Monitoring facilities.

A. The Public Works Director may require the user to construct and maintain, at the user's expense, monitoring facilities which meet all government safely regulations (OSHA) to allow inspection, sampling, and flow measurement of the building sewer or internal storm drainage systems and may also require sampling or metering equipment to be provided, installed, operated and maintained at the user's expense. The monitoring facility should normally be situated on the user's premises, but the Public Works Director may, when such a location would be impractical or cause undue hardship on the user or the City, require the facility to be constructed in the public right-of-way and located so that it will not be obstructed by landscaping or parked vehicles.

B. When the monitoring facility is inside the user's fence, there shall be accommodations to allow access for the Public Works Director or designated representative, such as a gate secured with a City lock. There shall be ample room in or near such monitoring facility to allow accurate sampling and compositing of samples for analysis. The monitoring facility shall be maintained at all times in a safe and proper operating condition at the expense of the user.

C. Whether constructed on public or private property, plans and specifications shall be approved by the Public Works Director and be in accordance with all applicable City construction standards and specifications. Construction shall be completed within sixty days following written notification by the City, unless a time extension is otherwise granted by the City. (Ord. 1501 § 1 (part), 1990)

13.12.520

Inspection.sampling, monitoring, and analysis. The Public Works Director or designated representative may inspect the facilities of any user to ascertain whether the purpose of this chapter is being met and all requirements are being complied with. Persons or occupants of premises where wastewater is created or discharged shall allow the Public Works Director or designated representative ready access at all reasonable times to all parts of the premises for the purposes of inspection or sampling or in the performance of any of their duties. The Public Works Director or designated representative shall have the right to set up on the user's property such devices as are necessary to conduct sampling or metering operations and be allowed to copy any of the user's discharge records. All user discharge records shall be retained for a minimum of three years per 40 CFR 403.12(o). Where a user has security measures in force which would require proper identification and clearance before entry into their premises, the user shall make necessary arrangements with its security guards so that upon presentation of suitable identification. the Public Works Director or designated representative will be permitted to enter without delay for the purposes of performing their specific responsibilities. The user will be charged a fee to recover the costs for inspections (investigations), sampling, monitoring, and analyses performed by the City for purposes of billing and insuring compliance with all regulations. (Ord. 1501 § 1 (part), 1990)

13.12.530

Accidental discharge prevention.

A Each user shall provide protection from accidental discharge of prohibited materials or other wastes regulated by this chapter. Such facilities shall be provided and maintained at a level of operation comparable to that of the original construction at the user's expense. Detailed plans showing facilities and operating procedures to provide this protection shall be submitted to the Public Works Director before construction of the facility.

B. The review of such plans and operating procedures by the Public Works Director will in no way relieve the user from the responsibility of modifying the facility to provide the protection necessary to meet the requirements of this chapter. (Ord. 1501 § 1 (part), 1990)

C. If any wastewater is spilled onto any surface or area in such a manner where there is the possibility of contact with any person, that wastewater shall be cleaned up at the expense of the property owner or a designate within a reasonable time as determined by the City, or the City will clean up the spilled wastewater and bill the property owner or designate for the cleanup. If warranted, or as directed by the City, property management must adequately notify tenants and post area of spill with warning signs.

13.12.540

Confidential information.

A. All information and data on a user obtained from reports, questionnaires, permit application, permits and monitoring programs and from inspections shall be available to the public or other governmental agency without restriction unless the user specifically requests and is able to demonstrate to the satisfaction of the Public Works Director that the release of such information would divulge information, processes or methods that would be detrimental to the **user's** competitive position.

B. When requested by the person furnishing a report, the portions of a report which might disclose trade secrets or secret processes shall not be made available for inspection by the public, but shall be made available to governmental agencies for use in making studies per 40 CFR 403.14; provided, however, that such portions of a report shall be available for use by the state or any state agency in judicial review or enforcement proceedings involving the person furnishing the report. Wastewater constituents and characteristics will not be recognized as confidential information. (Ord. 1501 § 1 (part), 1990)

13.12.550

Special agreements. Special agreements and arrangements between the City and any persons or agencies may be established when, in the opinion of the City council, unusual or extraordinary circumstances

compel special terms and conditions. However, in no case may federal pretreatment standards be waived or modified. (Ord. 1501 § 1 (part), 1990)

Article VII. Enforcement

13.12.560

Accidental discharge notice.

A Notice to Authorities.

1. Upon accidentally discharging wastes in violation of this chapter, or in violation of a City-issued discharge permit users shall notify the Waterwastewater Superintendent or the White Slough Water Pollution Control Facilities (WSWPCF) personnel immediately by telephone or in person, or by calling the Public Works Department 24 hour emergency number to enable countermeasures to be taken by the City to minimize damage to the sewerage system, treatment facility, treatment processes and/or the receiving water.

2. This notification shall be followed, within ten calendar days of the date of occurrence. by a detailed written statement to the Public Works Director describing the cause, location, type. volume, concentration, date, time, and duration of the accidental discharge, measures taken to correct the problem. and steps taken to prevent future occurrence.

3, Such notication will not relieve users of liability for any expense, loss or damage to the sewerage system, treatment plant, or treatment process, or for any fines imposed on the City on account thereof under Section 13350 of the California Water Code or for violations of Section 5650 of the California Fish and Game Code.

B. If sampling performed by a user indicates a violation, the user must notii the Waterwastewater Superintendent or the WSWPCF personnel within twenty-four hours of becoming aware of the violation. The user shall also repeat the sampling and analysis and submit the results of the repeat analysis to the Public Works Director within thirty days after becoming aware of the violation per 40 CFR 403.12(g)(2).

C. Employee Training. In order that employees of users be informed of the City's requirements. users shall make available to their employees copies of this chapter, together with such other wastewater information and notices which may be furnished by the City from time to time directed toward more effective

water pollution control. A notice shall be furnished and permanently posted on the **user's** bulletin board advising employees whom to call in case of an accidental discharge in violation of this chapter. (Ord. 1501 § 1 (part), **1990)**

13.12.570

Cease and desist order. When the *City* finds that a discharge of wastewater has taken place in violation of prohibitions or limitations of this chapter, or the provisions of a wastewater discharge permit, the Public Works Director may issue an order to cease and desist, and direct those persons not complying with such prohibitions, limits, requirements, or provisions, to:

A Comply forthwith;

B Comply in **accordance** with a time schedule set forth by the City; or

C. Take appropriate remedial or preventive action in the event of a threatened violation. (Ord. 1501 § I (part), 1990)

13.12.580

Compliance timetable. When the City finds that a discharge of wastewater has been taking place, or is threatening to take place, in violation of prohibitions or limitations prescribed in this chapter, or wastewater source control requirements, effluent limitations or pretreatment standards, or the provisions of a wastewater discharge permit, the City may require the user to submit for approval, with such modifications as it deems necessary, a detailed time schedule of specific actions, which the user shall take in order to prevent or correct a violation of requirements. (Ord. **1501** § 1 (part), **1990)**

13.12.590

Appeals.

A Any user, permit applicant, or permit holder affected by any decision, action or determination. including cease and desist orders, made **by** the Public Works Director, interpreting or implementing the provisions of this chapter or in any permit issued in this chapter, may file with the Public Works Director a written request

for reconsiderationwithin twenty days of such decision, action or determination, setting forth in detail the facts supporting the user's request for reconsideration. The Public Works Director may accept the application, reject the application for sound reasons or direct the applicant, at applicant's sole expense, to maintain and operate in a manner satisfactory to the Public Works Director such indicating or integrating meters as may be required *to* properly measure the flow, establish sampling equipment, tests and procedures satisfactoty to the Public Works Director to determine the characteristics of the wastes.

B. If the ruling made by the Public Works Director is unsatisfactory to the person requesting reconsideration, the person may, within twenty days after notification of the City's action, file a written appeal to the City council. The written appeal shall be heard by the council within twenty days from the date of filing. The City council shall make a final ruling on the appeal within twenty days of the hearing. The Public Works Director's decision, action or determination shall remain in effect during such period of reconsideration. (Ord. 1501 § 1 (part), 1990)

13.12.600

Liability. Any person, firm or corporation, or any partner, officer, agent or employee thereof, who deposits or permits to be deposited into the City's sewerage system any wastes other than those permissible under the terms of this chapter and the terms of a valid permit granted under this chapter is liable for any and all damage caused to the City by virtue of such act, including compensation for damage to the *C i s* facilities, and all costs of any legal fees, suits or judgments against the City which may be attributable to such wastes so discharged. (Ord. 1501 § 1 (part), 1990)

13.12.610

Injunction. Whenever a discharge of wastewater is in violation of the provisions of this chapter or otherwise causes or threatens to cause a condition of contamination, pollution or nuisance, the City may petition the superior court for the issuance of a preliminary or permanent injunction, or both, as may be appropriate in restraining the continuance of such discharge. (Ord. 1501 § 1 (part), 1990)

13.12.620

Damage to sewerage system - Charge. When a discharge of wastewaters or any other substance causes an obstruction, damage or any other impairment to the City sewerage system, the City shall assess a charge against the user for the work, materials, and services required to clean or repair the affected portions of the sewerage system. (Ord. 1501 § 1 (part), 1990)

13.12.630

Civil penalties. Any person who violates any provision of this chapter or permit condition or who discharges wastewater which causes pollution, or who violates a cease and desist order, prohibition, effluent limitation, national standard of performance, pretreatment or toxicity standard shall be liable civilly to a penalty not to exceed six thousand dollars for each day in which such violation occurs. The City attorney, upon order of the City council, shall petition the superior court to impose, assess and recover such sums. (Ord. 1501 § 1 (part), 1990)

13.12.640

Termination of service. The City may revoke any wastewater discharge permit, or terminate or restrict or cause to be terminated or restricted wastewater service to any premises, which may include termination or restriction of the water service if warranted, if a violation of any provisions of this chapter is found to exist or if a discharge of wastewater causes or threatens to cause a condition of contamination, pollution or nuisance as defined in this chapter. The City also reserves the right to immediately disconnect any user, upon informal notice only, in the event of an unlawful discharge which may cause imminent danger to human health, the environment, or which threatens to interfere with the treatment plants operation. This provision is in addition to other statutes, rules or regulations, authorizing termination of service for delinquency in payment. (Ord. 1501 § 1 (part), 1990)

13.12.650

Public notice of violation.

A In accordance with Federal Pretreatment Regulations 40 CFR 403, the City shall publish, at least annually in the largest daily newspaper circulated in the service area, a description of those industrial users which are found to be in significant violation with any provisions of this chapter or any permit or order issued hereunder during the period since the previous publication. (Ord. 1501 § 1 (part), 1990)

B. Significant violations include any of the following:

1. Chronic violations of wastewater discharge limitations (66 percent or more of all measurements taken in a six month period exceed the daily maximum or the long-term average limit for the same pollutant parameter);

2. Technical Review Criteria (TRC) violations (33 percent or more of all measurements taken in a six month period exceed 1.2 times the limit for toxics or 1.4 times the limit for BOD, TSS, and Oil and Grease);

3. Any other violation of an effluent limit the City determines has caused, either alone or in combination with other discharges, pass through or interference;

4. Any discharge that causes endangerment to human health, welfare or the environment. or causes the City to exercise its emergency authority to halt or prevent such discharge;

5. Failure to meet a compliance schedule deadline of enforcement order within 90 days after the scheduled date for starting construction, completing construction, or attaining final compliance;

6. Required reports that are more than 90 days late;

7. Failure to accurately report noncompliance;

8. Any violation determined to adversely affect the operation or implementation of the pretreatment program

Approved this 19th day of April, 1995

STEPHEN J. MANN
Mayor

Attest:

JACQUELINE L. TAYLOR
Acting City Clerk

State of California
County of San Joaquin, ss.

I, Jacqueline L. Taylor, Acting City Clerk of the City of Lodi, do hereby certify that Ordinance No. 1613 was introduced at a regular meeting of the City Council of the City of Lodi held April 5, 1995 and was thereafter passed, adopted and ordered to print at a regular meeting of said Council held April 19, 1995 by the following vote:

AYES:	Council Members - Davenport, Pennino, Sieglock, Warner and Mann (Mayor)
NOES:	Council Members - None
ABSENT:	Council Members - None
ABSTAIN:	Council Members - None

I further certify that Ordinance No. 1613 was approved and signed by the Mayor on the date of its passage and the same has been published pursuant to law.

JACQUELINE L. TAYLOR
Acting City Clerk

Approved as to Form:

BOB W. McNATT
City Attorney

City of Lodi
Public Improvement Design Standards
Introduction

I-1 Purpose and Scope

These Design Standards are published as required by the City of Lodi General Plan to provide standards for public improvements constructed within the City. They are to be used in conjunction with City Standard Construction Specifications and Standard Plans (hereafter referred to in total as "Standards") They shall apply to all new and reconstructed public improvements done as part of private development, public and private utility work within right-of-way and public utility easements (PUE) and City projects. However, they do not include traffic signal and other minor, informal standards used by the City in the design of publicly funded projects and in the analysis of existing problems.

These Standards also apply to street, storm drainage, wastewater and water system improvements which are to be owned and maintained by the City of Lodi, except as noted below. The design of lighting and electrical facilities is not included in these Standards and shall be in accordance with rules and regulations of the City of Lodi Electric Utility Department.

Although intended for public improvements, these Standards affect the design of private, on-site facilities. In some cases, other City Departments refer to these Standards for their on-site requirements under separate authority. Generally, such cases are specifically identified in the appropriate sections,

Nothing in these Design Standards is intended to reduce or modify applicable Federal, State or Local laws nor to create a standard to be applied retroactively to existing improvements except where specifically noted.

1-2 Design

These Standards are not a "Code" nor are they a replacement for engineering design and judgement. The design of each project is in itself a special case and these Standards should not be construed to be the maximum (or minimum) required design on a project. In some cases, it may be impractical to meet these Standards. The design engineer is encouraged to meet with City engineering staff to review design problems early to avoid reworking plans where deviations are not permitted. Legal requirements must be met; such requirements are noted "(legal min.)".

This document does not attempt to repeat all the various agency, professional and industry standards used in engineering design. Rather it cites acceptable references and sets desired standards for the normal range of work anticipated in Lodi based on expected local conditions. Names of references noted are abbreviated; full names and comments on them are included in Appendix A-5.

I-3 Authority

These Standards are adopted by Resolution #91-92 of the City Council and implement various sections of the Lodi Municipal Code and General Plan goals and policies. Resolution #91-92 provides that the City Engineer shall interpret and make decisions concerning these Design Standards, The City Engineer is also empowered to update the Standards consistent with the General Plan and City Ordinances, Resolutions and policies affecting these Standards.

Section 1 - Streets

1.100 General

1.101 Scope

All public streets shall be designed in accordance with acceptable engineering principles and shall conform to these Standards. Primary references for supplemental information and/or details include the Caltrans Highway Design Manual, the Transportation Engineering Handbook, "A Policy on Geometric Design of Highways and Streets (the AASHTO "Green" Book) and "Design of Urban Streets".

Private streets and parking lots shall be designed according to applicable development approvals, City Codes and Standards and accepted engineering principles.

1.102 Submittals

The sequential requirements listed below are based on projects subject to the City's Growth Management Plan Developers and design engineers of projects not subject to the Plan should consult with the City Engineer to determine applicable and appropriate timing of submittals

Hpyploprnpnt Plan Stafle (prpliminary plan for pntirp parrpl/rtevplopmpnt)

Development plan submittals shall include a map showing the proposed project, existing streets (rights-of-way, medians, number of lanes and regulatory traffic controls) in the vicinity (400 ft. minimum) of the project and new street rights-of-way proposed for the project. At least one map showing right-of-way and lot lines shall be submitted at a scale of 1"=200'

Lot lines and sight-distance triangles per §1.303 shall also be shown at the following locations:

- intersections at reverse frontage lots;
- intersections at curved streets;
- intersections with adjacent building setbacks less than 20 feet

A table showing land use categories and acreage, trip generation and total traffic shall be provided.

Prnjprt Mastpr Plan Stflflp (riptailpri plan for pntirp parnpl/ripvplnpmpnt)

A detailed street master plan for an entire project may be required by the City Engineer for projects involving extension of streets through adjacent property or to assure that the layout of the approved development plan will meet these Standards.

Improvement Plan Stafle (spprifin improvement plans for portion heinn rtevploppri)

Improvement plans shall include the information listed in §5.200 and Appendix A-1

1.200 Design Volumes

1.201 General

Unless otherwise designated in the Street Master Plan or approved development plan, the design volumes shall be used to determine required street classifications and shall be approved by the City Engineer For projects less than 100 acres, volumes may be estimated using these Design Standards in consultation with City Engineer; however, a traffic study may be required at locations with access, capacity or other traffic problems. Larger projects and those requesting

significant changes to the General Plan shall have a traffic study as required as part of the development approval process.

The following table relates street classification and design volume and design speed

Street Classification	R/W,(	3urb-Curb Width	Standard Configuration	Design Speed	Daily Traffic Volume Range	
Minor Residential	50	34	2 lanes	25	0	500
Standard Residential	55	39	2 lanes	30	500	4,000
Minor Collector	60	44	2 lanes	35	4,0..	
Major Collector	68	52	2 lanes with LT lane/median	40	10,000	14,000
Industrial (Local)	66	52	2 lanes	40	0	14,000
Secondary Arterial	80	64	4 lanes	50	14,000	22,000
Minor Arterial	94	76	4 lanes with LT lane/median	55	22,000	24,000
Major Arterial	118	102	6 lanes with LT lane/median	60	24,000	36,000

See §1 302 regarding cross sections.

1.202 Traffic Studies

Traffic studies shall only be conducted after consultation with the City Engineer regardij.^ *<».,„ of work, assumptions, computer programs and models to be used and other parameters.

Institute of Transportation Engineers (ITE) average trip generation rates shall be used as approved by the City Engineer. For mixed use development projects, individual building rates shall be added. For example, in a commercial development consisting of a large retail space with detached building pads, shopping center rates may be used for the large retail space and fast food, bank or other appropriate rates used for the pads. "Pass-by" reductions in rates shall be approved by the City Engineer.

Minimum trip generation rates per gross acre or other units are shown in the following table:

Land Use Type	Peak Rgte	Daily Rate	Units
Single Family Residential	1.1	10	TE/DU
Duplex Residential	0.9	8	TE/DU
Multi-Family Residential	0.7	6	TE/DU
Office	18	128	TEIAcre
Light Industrial	11	65	TE/Acre
Heavy Industrial	7	40	TE/Acre
Light Commercial	15	150	TEIAcre
General Commercial	30	300	TEIAcre
Shopping Center	30	300	TE/Acre
Public Offices & Civic Center	16	160	TE/Acre
Park & Public Facilities	04	4	TE/Acre
Elementary & Middle School	0.11	1.1	TE/Student
High School	025	2.5	TE/Student
Hospital	15	150	TE/Acre

TE = Trip End DU = Dwelling Unit

1.300 Street Design

1.301 General Design

Minor and Standard Residential streets shall be designed *to* discourage through traffic. Incorporation of moderately curved streets, cul-de-sacs, knuckles, and T" intersections in the site plan is encouraged.. Maximum length of continuous straight streets should not exceed 1,000 feet. Continuous straight streets with residential frontage, between two collector or arterial streets, are prohibited.

Block lengths shall not exceed 1300 feet.

On-site improvements on lots fronting arterial and major collector streets shall be designed ouch that exiting vehicles do not have to back out onto the street, (Use circular or hammerhead driveways, on-site circulation, etc)

A cul-de-sac shall be constructed on all permanent dead-end streets. Cul-de-sacs are discouraged in commercial and industrial developments and shall be specifically approved by the Planning Commission or City Council The maximum design volume on a cul-de-sac shall be 500 vehicles per day. The maximum length of a cul-de-sac regardless of volume shall be 750 feet.

Permanent cul-de-sac streets shall have a turn-around at the closed end with a minimum right-of-way radius of 50 feet. The reversing curves at the beginning of the turnaround shall also have a 50-foot R/W radius except in short cul-de-sacs (bulbs) where they would intersect the curb return at the entrance. In such cases, the design shall be specifically approved by the City Engineer. Asymmetrical configurations are permitted.

Temporary cul-de-sacs on dead-end streets that are *to* be extended may be required for Fire Department turn-around depending on the length of the street and location of fire hydrants.

Alleys

New public alleys are not allowed unless specifically approved by the City Council, however, developments with private streets may be designed to minimize the number of access points onto arterials.

& riflht-of-

Requirements for roadside or median landscaping or "hardscaping" and right-of-way (reverse frontage) fences are not included in these Standards and shall be determined on a case-by-case basis by the City Engineer subject to project conditions of approval

"Knuckles" on residential streets are to provide proper lot width at the setback line and shall conform to Standard Plan 133.

Lot lines should follow subdivision boundary lines unless specifically approved otherwise on the development plan. Streets shall be fully improved within tract boundaries.

1.302 Cross Section

Cross sections for standard street classifications are shown on Standard Plan 101 These cross sections may be modified by the City Engineer based on specific plans, traffic study requirements for project access lanes or other development approvals.

Streets along tract boundaries (half-streets) shall have a minimum 32-foot improved travelled way. If "No Parking" is approved by the City Council prior to approving the plans, the width may be reduced to 24 feet Temporary curbing shall be provided at the unimproved edge of the pavement,

The standard cross slope of the street shall be 2 5%. Where necessary to match existing facilities, the cross slope on new streets may vary between 1% and 4%. Replacement of existing travel lanes in order to meet cross slope criteria may be required. Intersection, cul-de-sac and knuckle cross slopes should be 2% maximum, 0.75% minimum.

Upon approval of the City Engineer, the cross slope may be increased to 9% for overlays, shoulder work or other special circumstances Grinding is normally required to minimize the effects of overlays and may include double passes, the first 6 feet wide, adjacent to the gutter at constant depth, with a second, tapered transition pass next to the first. (See §1.410, Driveway slope for additional criteria at driveways)

'1.303 Intersection/Driveway Sight Distance

Minimum requirements for intersection and driveway sight distances are shown in the "Sight Distance Requirements" table and are based on stopping sight distances for traffic on the major (through) street and stop control on the intersection/driveway Preferred distances are from ITE Handbook Table 19-8 "Suggested Corner Sight Distances at Intersections" which are intended to allow opposing traffic to cross the major street without requiring approach traffic to reduce speed. These longer distances will normally be required for new streets and may be required in other circumstances depending on available setback or other considerations.

Planned intersection controls shall be considered in determining the appropriate sight distance. For example, where a traffic signal is planned, and the intersection will be initially controlled with a two-way stop, the minimum sight distance may be provided at the "stop" legs of the intersection.

Sight distance shall also be provided at median openings as appropriate.

Right-of-way or sight distance easements shall be provided at new reverse frontage fences, signs or other obstructions as appropriate. The "clear" area shall not contain shrubbery, mounds, signs or other obstructions over 30" high. Poles and trees shall be spaced far enough apart to provide adequate sight and tree limbs shall be at least 7 feet above the ground. (This section is not intended to preempt the zoning code with regard *to* front yard fences in residential areas.)

Sight Distance Requirements

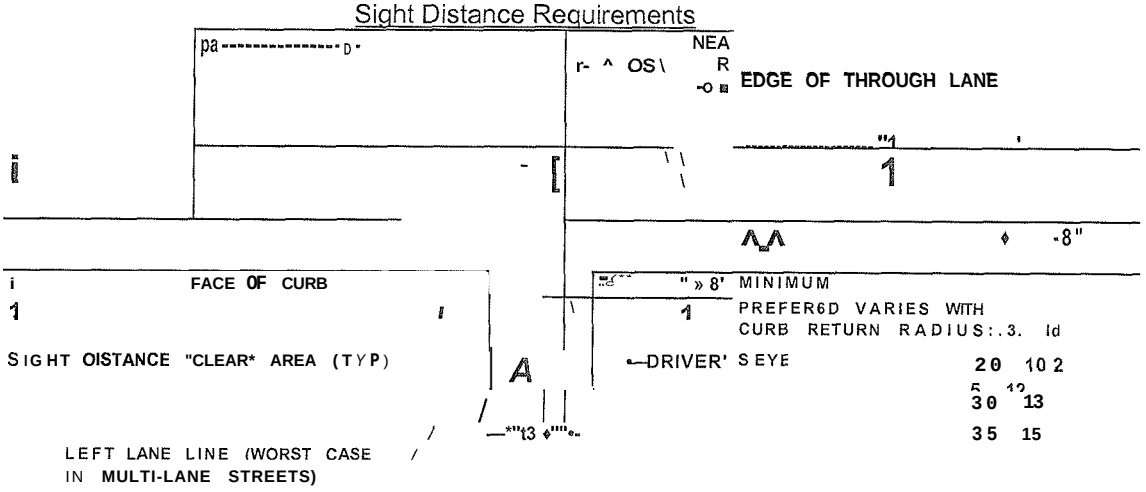

Major St. Classification	Design Speed	"A"	"B"	"D" (ft-) Minimum	"D" (ft-) Preferred
Minor Residential	25	14	25	150	250
Standard Residential	30	16	27	200	300
Minor Collector	35	19	30	250	350
Major Collector	40	17	34	300	400
Industrial	40	23	34	300	400
Secondary Arterial	50	17	40	430	500
Minor Arterial	55	17	52	500	550
Major Arterial	60	15	68	580	600

The above " A and "B" distances (in feet) assume new standard cross sections per Standard Plan 101 Existing streets shall be checked using the worst case of existing or future striping and the higher of the design speed or existing 85th percentile speed.

1.304 Vertical Alignment

Vertical curves are rarely required in Lodi due to the flat terrain Thus the following standards are brief and only describe minimum requirements. The design engineer is referred to the references cited for additional design criteria where compound curves are needed such as canal crossings.

Where the algebraic difference in longitudinal slope exceeds 1%, a parabolic vertical curve shall be used. The minimum length of vertical curve shall be per the following:

L = KA where L = length of vertical curve, ft K = constant per Table below A = algebraic difference in grades, %

Vertical Curve K Values

Design Speed	Crest Curve	Sag Curve
25	20	30
30	30	40
35	50	50
40	80	70
50	160	110
55	220	130
60	310	160

The above table is based on stopping sight distance per Table V-2 of the AASHTO "Green" Book In arterial streets where passing is permitted, higher **K** values per Table V-3 shall be used.

The minimum length of vertical curve shall be 200 ft. for design speeds below 40 mph and 400 ft for design speeds of 40 mph and above. Where the calculated length is below the minimum, the curve may be approximated by an intermediate straight segment(s)

Top of Curb and Flowline Grades

Flowline grades shall not be less than 0 25% and not greater than 6%. A normal design minimum of 0.30% is recommended to minimize birdbaths. (Note gutter flowline tolerances in the Construction Specifications.) Where matching existing improvements, the minimum grade may be reduced with the approval of the City Engineer. With the specific approval of the City Engineer, curb height may be varied from a minimum of 4" to a maximum of 7"

The minimum top of curb elevations shall be l-foot above the design maximum water surface of the Master Plan Storm Drainage Basin to which the proposed improvement is tributary, This minimum elevation is listed in §3.703

A minimum top-of-curb elevation of 1-foot above the calculated hydraulic grade line shall be maintained.

Grades on opposite sides of the street shall be the same wherever practical

On cul-de-sacs, knuckles and other curves (except curb returns) where the curb radius is less than 100 feet, the flowline grade shall be 0.30% minimum.

Oirh Return

Top *of* curb fall (in feet) around returns shall be per the following table:

Radius	Retrofit Minimum	New Construction Minimum	New Construction Maximum
15	0 12	0.20	0.50
20	0 16	0.20	0.60
25	*	0.25	0.80
30	*	0.30	0.90
35	*	0.35	1.00
40	*	0.40	1.10
45	*	0.45	1 20
50	*	0.50	1.30

'Special Determination

At returns where the curb type changes, differences in curb height shall be taken into account in the design so as not to reduce the flowline fall.

Median grades shall follow street grades. Minor variation in top of median curb grades on opposite sides of the median is permitted depending on the width and nature of landscaping For aesthetic reasons, the maximum variation at noses or other medians less than 6 feet wide should be 0.15± ft. Median noses and other areas with solid fill in between curbs shall be sloped to drain

1.305 Horizontal Alignment

Street Curvature

Design of curved arterial and collector streets shall be based on criteria in the Caltrans Highway Design Manual The minimum radius of curvature of centerline for all streets shall be per the following table:

	Minimum Horizontal Curve Radius		
Street Classification	Design Speed	Radius (ft.)	Notes
Minor Residential	25	220	
Standard Residential	30	250	1
Minor Collector	35	500	1
Major Collector, Industrial	40	550	1
Secondary Arterial	50	850	1,2
Minor Arterial	55	1000	1,2
Major Arterial	60	1150	1,2

Notes:

1. Minimum radius is below that indicated in Caltrans ahwa 203 2 "Comfortable Speed on Horizontal Curves" for the standard cross slope. While this is acceptable on residential and industrial streets, larger radii, superelevation or reduced design speed should be considered on collector and arterial streets.
2. Minimum radius assumes no sight obstructions Figure 201.6 "Stopping Sight Distance on Horizontal Curves of the above reference should be checked when walls, or other obstructions are planned within 20 ft. of the right-of-way,

There shall be a tangent between reversing curves of at least 150 feet on arterial and collector streets, and 50 feet on all other streets.

Length of pavement transitions affecting travel lanes shall be designed per applicable Caltrans Standards (Hwy. Design Manual §206). At ends of curb & gutter, the minimum transition length shall be based on a 45° pavement transition. Longer distances will be required where a driveway is located at the end of the curb & gutter.

Intersection Anr)le

Streets shall intersect at right angles (±5 degrees). Curved residential streets shall have at least 50 feet of centerline perpendicular (± 5 degrees) to the projected curb line of the intersecting street Longer perpendicular distances may be required on collector and arterial streets.

Curb return radii for various street types shall be as shown on Standard Plan 611

Angle points of 5 degrees or less are allowed on residential street centerlines with approval of the City Engineer In such cases, the curb face shall be designed with a 1OO-foot radius curve.

All streets entering upon opposite sides of any given street shall have their centerlines directly opposite each other or separated by at least 150 feet. Cross streets are *to* be avoided unless one or more legs are cul-de-sacs. Greater distances may be required on collector and higher classification streets based on anticipated turning volumes. Intersections that are to be signalized shall be four-way.

The minimum distance between streets entering a restricted access street shall be as provided by a Specific Plan adopted by the Planning Commission and City Council.

The location of any new intersection between a local street and an arterial shall be reviewed by the City Engineer to determine safety and compatibility for signal progression. The City may restrict access to right-turn-only if necessary.

1.306 Medians

Medians and median openings shall be constructed at locations shown on Specific Plans or as required as part of project approval. See §1.301 regarding landscaping.

Design geometries for parabolic median curb transitions, fiares and left-turn-in-only median openings are shown in the Standard Plans

Median curb heights shall be 8" with a minimal reverse gutter provided. Due to excessive pavement deterioration from watering, interior drainage at landscaped medians shall be provided.

1.400 Driveways

1.401 General Requirements

The following driveway standards are not applicable to State Highway or controlled access streets where access is limited by deed or map restrictions or other development restrictions. If driveways are approved at such locations, the applicable design requirements shall be used New driveways on restricted access streets (most of Cherokee Lane and other streets per map or deed restrictions) require City Council approval.

The number, location and width of permitted driveways is regulated by the Public Works Department and shall be based on the demonstrated needs of the parcel being served They shall not be excessively detrimental to the abutting street capacity, safety, and/or efficiency.

The City Engineer may modify any of the following standards in order to provide better traffic movements or because of special or unusual conditions. The ITE publication "Guidelines for Driveway Design & Location" contains additional design guidelines.

"Commercial" driveways per Standard Plan 114 shall be used on all driveways serving 4 or more parking stalls and other locations where trucks, including garbage trucks, are anticipated. Where land use changes affect existing driveways proposed for reuse, the City Engineer may require upgrading of the driveway to commercial standards.

"Common" driveways straddling a property line to serve two or more parcels, are permitted provided applicable width and clearances are met.

'1.402 Special Driveways

Special driveways are those with a depressed back of driveway at the property line and a radius instead of a curb transition and are used to provide improved access at high volume driveways and minimize capacity reduction on collectors and arterials. Design geometries are shown on Standard Plan 111.

Special driveways shall be used when the driveway peak hour volume exceeds 300 vehicles per hour and may be required at lower volume driveways at critical locations

Depth of flow in the gutter is limited to 3 inches, see §3.502.

'1.483 Widtk

Maximum driveway width shall be 35 feet for standard driveways and 56 feet for special driveways unless specifically approved otherwise by the City Engineer for high truck volumes or other factors.

The total width of commercial and industrial driveways shall not exceed 60% of the frontage.

The minimum width of a single driveway shall be 12 feet and 24 feet for a driveway serving a parking lot with a two-way aisle Additional driveway width may be required on collectors and arterial streets particularly where there is no parking and a travel lane is adjacent to the curb.

Standard driveway width is measured at the curb line and includes only the depressed section. Special driveway width is measured between curbs behind the property side. Width of a raised medians separating in and out traffic is not included in the width,

1.404 Distances from Curb Returns

Commercial, industrial or other high volume driveways on arterials and major collectors shall be located as far as practical from the nearest curb return and may be prohibited within 100 feet where the intersection is signalized, is planned for signalization, or intersection capacity is critical. At other locations, the top of the driveway transition shall be at least 10 feet from the nearest curb return provided the return meets current standards for radius and location At streets to be widened or improved, the above distances shall"be measured from the ultimate location of the curb return,

At alleys the driveway transition shall be permitted no closer than 10 feet from the projected intersecting alley curb face, and no closer than 2 feet from the nearest alley curb return.

1.405 Distances From Utility or Safety Devices

Driveway transitions shall clear all public facilities such as street light and traffic signal standards, utility poles, fire hydrants, and street trees by a minimum of 3 feet. Greater distances from fire hydrants is recommended. Any relocation of public facilities required to maintain such clearance shall be at the expense of the party requesting the driveway.

1.406 Distance Between Driveways

A minimum of 4 feet of full curb height shall be maintained between the top of transitions of adjoining driveways No driveway shall be constructed which results in a curb length between transitions in excess of 14 feet, unless the curb length is at least 22 feet in length. Where practical, the total space between driveway transitions shall be in multiples of 22 feet plus 4 feet. (Spacing = 22X + **4)**

'1.407 Distances From Property Line

A minimum of 2 feet of full curb height shall be maintained between the property line and the top of the driveway transition except where common use driveways have been permitted.

1.408 Removal

Any abandoned driveway shall be completely removed and replaced with standard curb, gutter and sidewalk, Driveways are considered abandoned when on-site development, fencing or other use demonstrates that the driveway is no longer needed

1.409 Parking Lot Driveways

Parking lot driveways shall be designed in such a manner as to preclude the use of the abutting public street for vehicular circulation solely related to the parking lot. The driveway shall be commercial type per Standard Plan 114. Design of the lot shall conform to Standard Plan 134

1.410 Driveway Slope

Driveways shall be designed to minimize vehicles scraping the pavement in front of the driveway or high-centering at the back of the driveway.

In new work, the driveway grade measured at a point 10 feet behind the flowline shall no; s*ceed 0.75 feet above the flowline

In designing overlays or driveway replacements, the deflection angle at the flowline determined by a point on the pavement 4 feet out from the flowline and a point on the driveway 10 feet behind the flowline should not exceed 9.75°.

1.500 Curb, Gutter and Sidewalk

1.501 General Requirements

Curb, gutter and sidewalk shall be installed in all new developments unless specifically deferred or otherwise waived. Curb and gutter may be required to be extended across adjacent parcels for drainage purposes. New ditches or swales are not permitted across residential frontages.

1.502 Curb and Gutter Type

Curb and gutter with a vertical "barrier" type curb shall be installed along frontages conforming to any of the following criteria:

- Collector, arterial or higher classification streets;
- Multi-family residential frontage;
- Commercial or industrial frontage;
- School, church, park or other public use frontage;
- Any curb where the street centerline radius is less than 200 feet unless specifically determined otherwise by the City Engineer;
- All curb returns;
- Installations where driveways are existing or known as part of an approved development plan unless specifically determined otherwise by the City Engineer;
- Other areas designated by the Planning Commission or City Council.

Roll "mountable" type curb and gutter per Standard Plan 136 may be installed on streets within new single-family developments. Valley gutters (Standard Plan 116) will be allowed only at intersections of cul-de-sac streets which provide access to fewer than 10 lots

Various designs of curb and gutter have been used in the City. For minor repairs of existing improvements, the type of curb and gutter shall match existing. In replacing curb returns or over 1/> of a block face, vertical or rolled curb & gutter per Standard Plan 135 & 136 shall be used as appropriate. Existing curb & gutter should be considered for replacement where ponding extends into the pavement. In replacement projects, curb height may be varied from 4" to 7" to match existing improvements.

Four foot transitions with weakened plane joints at each end shall be used to separate different curb & gutter types.

1.503 Sidewalk

The minimum widths of sidewalk shall be 4 5 feet in residential streets, 4 feet in local industrial streets, 7.5 feet in commercial areas, or as noted on the Specific Plan. The above widths do not include the curb width.

Widths shall be increased by at least one foot where fences, walls or other similar clearance obstacles to pedestrians are constructed.

At poles, trees and other small structures, the minimum clear width provided shall be four feet. Upon specific approval of the City Engineer, the minimum width may be reduced to three feet (legal min) in extreme cases, The "obstacle course" effect of closely spaced poles and other street hardware on opposite sides of the sidewalk shall be avoided.

New poles or other devices placed in the sidewalk on the curb side shall have a minimum distance from the face of curb of one foot.

Back of walk transitions necessary to accomplish the above clearances shall have smooth reversing curves or angle points with deflection angles not exceeding 30 degrees.

1.504 Wheelchair Ramps

Wheelchair ramps shall be installed in all new curb returns per Standard Plan 132 (legal min.) Ramps may also be required at'T" intersections or knuckle&at a lot line on the side opposite the curb return.

Wheelchair ramps shall be retrofit at curb returns where the adjacent street pavement is being reconstructed or new buildings are being constructed on corner lots.

Handicapped access shall be included at appropriate locations in medians, parking lots and other improvements (legal min.).

1.505 Back of Sidewalk

Improvement of the space between the back of sidewalk and the right-of-way (normally 2V2 ft.) shall be consistent with the proposed land use and minimal City maintenance. Where this space is incorporated into on-site landscaping, maintenance is the responsibility of the owner/developer.

At reverse frontage fences, the space shall be filled with additional sidewalk or approved hardscaping except where approved otherwise in the development plan.

1.600 Structural Section

The structural section shall be asphalt concrete (AC) pavement with aggregate base designed in accordance with the procedures contained in the "Flexible Pavement Structural Section Design Guide for California Cities and Counties" and these Standards. Full depth asphalt concrete may be specified as an alternate. The City has a computer spreadsheet to make the necessary calculations which is available to consulting engineers. The calculation includes a variable safety factor applied to the AC on high volume streets.

The soils report shall be a guide for determining the limits of appropriate R-values for design of structural sections. The limits shall be approved by the City Engineer prior to design. The R-value used in design shall not exceed 60 Upon approval of the City Engineer, the plans may be prepared based on

preliminary R-values with appropriate notes for timely retesting during construction for determination of final design values.

The Traffic Index shall be established by the City Engineer with a minimum of 2% trucks. The following table provides some minimum values and can be used as a guide in determining appropriate structural sections within a residential development.

Street	Maximum APT	T.I.	Minimum Section	Lowest R-Value*
Minor Residential	200	4.0	0.20" AC/0.30[1] AB or 0.35'AC	30
Minor Residential	500	4.5	0.20'AC/0.30'AB or 0.35" AC	40
Standard Residential	1000	5.0	0.20'AC/0.30[1] AB or 0.35'AC	47
Standard Residential	2300	5.5	0.20'AC/0.30'AB or 0.35'AC	53
Standard Residential	4000	6.0	0.20' AC/0.30[1] AB or 0.35' AC	58
Minor Collector	4200	6.0	0.20" AC/0.30[1] AB or 0.35'AC	58
Minor Collector	8200	6.5	0.25' AC/0.30[1] AB or 0.40" AC	60
Minor Collector	10000	7.0	0.25'AC/0.35'AB or 0.40" AC	60

* "Lowest R-value" is the minimum value necessary to allow use of the minimum structural section

Minimum subgrade compaction of native material shall be 8" @ 92% relative compaction (R.C.) for residential streets and 6" @ 95% R.C. (removed and replaced material), over 6" @ 90% R.C. compacted original ground on industrial, collector and arterial streets. Any fill or disturbed material below shall also be compacted to 90% R.C.

These Design Standards are to be conservatively applied to developments to provide pavement that will have at least a 20-year design life.

Upon approval, transitions and other temporary pavements may be designed for a shorter life.

New development may be required to remove and replace existing pavement as necessary to provide a high quality connection between existing and new improvements. Examples include:

- ravelled edges of existing pavement;
- additional pavement to meet cross slope standards;
- ends of streets being extended;
- flares at shoulders;
- transitions

The City may require that the developer install a reduced pavement section in anticipation of excessive street cuts for utility services to the lots. In such cases, the developer shall pay the City the difference in cost between the full section and the reduced section and the City will be responsible for the installation of the future additional pavement.

Trench structural sections shall be as shown on Standard Plan 506 unless approved otherwise and shown on the improvement plans,

Pavement cuts may be prohibited in new or recently overlaid streets. In cases where such cuts are permitted, pavement "T" cuts or other special trench replacement sections may be required.

Design criteria and specifications for jacking or boring are not included in these Standards and are to be determined on a case-by-case basis.

Section 2 - Wastewater

2.100 General

2.101 Scope

These standards apply to all public wastewater facilities designed for installation within a public right-of-way or PUE in the City and are limited to sewer mains and laterals 15 inches or less in diameter Standards and requirements for larger sizes will be determined by the City Engineer as needed Except where specifically noted in these Standards or as required as part of project approval, all wastewater facilities installed on private property for private use and ownership shall be designed and constructed in accordance with the provisions of the Uniform Plumbing Code, as adopted by the City

Wastewater lines shall be designed in accordance with acceptable engineering principles, California OSHA Standards (legal min.), and State of California Title 22 requirements (legal min,), and shall conform to City Standards. Storm water collection facilities shall not be connected *to* a wastewater line Industrial waste sources may be connected or discharged into a wastewater line with approval of the City Engineer.

These Standards do **not** cover all the applicable City, State and Federal requirements for wastewater quality and monitoring (See Lodi Municipal Code and the Water/Wastewater Superintendent for applicable requirements.)

2.102 Submittals

The requirements listed below are based on projects subject to the City's Growth Management Plan. Developers and design engineers of projects not subject to the Plan should consult with the City Engineer to determine applicable and appropriate timing of submittals.

Dpyplnpmpnt Plan Stane (preliminary plan for entire parrel /development)

Development plan submittals shall include a map showing the proposed project, existing septic systems, wastewater mains in the vicinity of the project and new mains, 12" and larger proposed for the project.

A table showing land use categories and acreage and average and peak flows shall be provided (average flow in mgd, peak flow in cfs)

Projent Master Plan Stage (detailed plan for entire parnel/rievelrtpmpnt)

Prior *to* preparation of improvement plans for the first construction phase of the project, a wastewater master plan for the entire project shall be submitted for approval by the City Engineer.

The preliminary design submittal shall include the following items:

- A plan, 1" = 100' scale, showing the proposed system, preliminary pipe sizes, tributary subareas, existing and future tributary areas outside the project limits, zoning, projected land use, and any features affecting the system
- Design flows at major junction points including flows coming from outside the project limits. A calculation sheet is provided in the Appendix which may be reproduced by the consulting engineer.
- A description and preliminary sketches of any pump stations including: number and size of pumps, wetwell volume and operating levels, provisions for standby power or energy operations, and maintenance access.

- Where the design includes additional tributary areas outside the project as required by the City ami the developer wishes to obtain reimbursement for oversize pipes, the Engineer shall submit additional calculations and design for the project only in order to estimate the reimbursable portion.

Improvement Plan fitagp (sperifir improvpmpnt plans for portion hpinfl ripvploppri)

Improvement plans shall include the information listed in 95 200 and Appendix A-1

2 200 Design Flow

Wastewater lines shall be designed on a peak flow basis. Design peak flows shall be estimated by applying the appropriate peaking factor to the average flow.

For analysis of existing lines or where existing land use is higher than the zoning, flow shall be calculated based on an average sewage flow of 100 gallons per capita per day with a population of 3.0 capita per single family dwelling unit and 2.0 capita per multiple family dwelling unit.

For lines serving new areas or where existing land use is lower than the zoning, the City zoning map and/or general plan shall be used to estimate average flow. The following table summarizes this criteria:

Zoning	Land Use	Pers/unit	Units/acre	Pers/acre	Flow
R-1	Residential	30	4	12	0.00186 cfs/acre
R-2	Residential	3.0	6	" 18	0.00279"
R-GA	Garden Apt	2.0	20	40	0.00619"
R-MD	Medium Density Residential	2 0	30	60	0 00928"
R-HD	High Density Residential	2,0	40	80	0 01238"
PR	Planned Residential (unspecified)	2.6	7	18.2	0 00282"
PR/LD	Planned Residential (low density)	2.75	5	13 75	0 00213"
PWMD	Planned Residential (medium density)	225	12	27	0.00418"
PR/HD	Planned Residential (high density)	200	24	48	0.00743"
		gal.	/acre/day		
xcx	Commercial		2500		0.00387"
Mxx	Industrial		2000		0.00309"
n/a	Institutional (Schools, etc)				0.000039 cfs/attendant

The above values are average figures based on the assumptions shown. At locations where a specific use is proposed for which the flow would exceed these figures, the higher value shall be used.

Peak flow shall be obtained by multiplying the average flow by the following peak factors These peak factors include an allowance for infiltration/inflow The peak flow factor shall be 3 0 for commercial and institutional flows and 2 0 for industrial flow.

Peaking factors for residential flow shall be selected from the figure below based upon total upstream service population.

Wastewater Peaking Factor

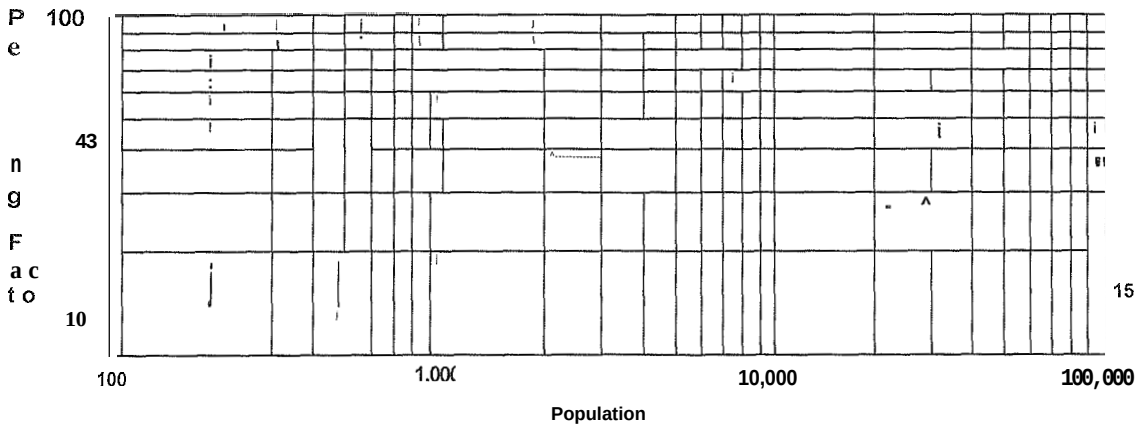

2.300 Pipe Design

2.301 Minimum Size

New gravity wastewater lines shall be 8 inches or greater in nominal diameter, except the mo,. upstream manhole-to-manhole reach of a main sewer having no potential for further extension may be 6 inches in nominal diameter.

2.302 Design Depth of Flow

Main wastewater lines (8 through 10 inches in diameter) shall be designed to flow a maximum of one-half full at peak design flow Trunk wastewater lines (12 inches and larger in diameter) shall be designed to flow a maximum of three-fourths full at peak design flow.

2.303 Slope

All sewers shall be designed to use the available slope to give peak flow velocities of not less than 2.0 feet per second based on Manning's formula using an "n" value of 0 013. Minimum slopes and the corresponding design capacity based on §2.302 and 32 303 are

>ize	Minimum Slope (ft/ft}	Design Cap. (cfs)	Full Cap. (cfs)
6	0.0048	0.20	0.39
8	0.0033	0.35	070
10	00025	055	1.10
12	0.0019	1.45	1 56
15	0 0014	2.25	2.42

It is understood that it is impractical to meet these velocity standards at upstream ends of the collection system and they are waived in such cases Designs in which downstream mains do not meet these velocity standards shall be specifically approved by the City Engineer,

Maximum velocity shall not exceed 10 feet per second at peak flow Sewers shall be designed with uniform slope between manholes

2.304 **Vertical Alignment**

The minimum cover for wastewater lines shall be 3 feet from the existing or planned final grade, whichever is lower, to the top of the sewer pipe. Laterals shall have a nominal cover of $2^1/s$ feet at the property line or at a point 5 feet outside the curb face or edge of paving, whichever is the greater distance from the roadway centerline.. See §2.401 for additional information regarding service lateral cover and 35 701 for structural considerations.

When crossing a water main, the wastewater line shall be installed below the water main with a clearance of at least 12 inches Where this separation cannot be maintained, the City Engineer may approve reduced clearances based on Standard Plan 415. A minimum vertical clearance of at least 3 inches shall be maintained between a wastewater line and a storm drain. Separation distances shall be measured from the nearest edges of the facilities

At points of convergence of pipes of various sizes, the pipe crown of the inflowing pipe(s) shall be no lower in elevation than the crown of the outflowing pipe. See §2.502 regarding drop manholes for additional information.

2.365 **Horizontal Alignment**

Wastewater Lines shall be placed within street rights-of-way unless placement in an easement is specifically approved by the City Engineer. Alignment shall be parallel to the street centerline whenever possible.

The horizontal alignment of wastewater lines in new streets, easements and private streets shall be as shown on the appropriate City of Lodi Standard Plan. In existing streets and other special cases (such as looped streets in which the utilities may be located concentrically to avoid crossings), the alignment may vary from the Standard Plans, but in no case shall there be less than 10 feet horizontal clearance to a water main, except as specifically approved by the City Engineer in accordance with State Department of Health Services policies.

Curved sewers are allowed. However, joint deflections or pipe curvature shall not exceed the pipe manufacturer's recommendations. The following table may be used as a conservative guide. If a shorter radius is desired, the appropriate design information (i..e. short pipe lengths, radius fittings, etc) shall be shown on the plans.

	Minimum Radius of Bending Circle (ft.)		
Pipe Size	Ductile Iron	PVC	VCP
4	190	160	200
6	190	160	200
8	190	210	200
10	190	270	200
12	190	320	200
15	n/a	390	260

Wastewater lines, including laterals, or other sanitary hazards shall not be constructed adjacent to any existing or proposed well site. California State Department of Health Services requirements shall be the minimum required separation, however these may be increased where the well location is not fixed or redrilling is planned.

2.306 Pipe Materials

The following standard pipe materials shall be used for gravity flow wastewater line construction and shall conform to the appropriate American Society of Testing and Materials (ASTM) and American Water Works Association (AWWA) specifications (latest revision):

Pipe Material	Specification
Ductile iron pipe	ASTM A746
w/polyethylene lining &	ASTM D1248, Class C, 30 mil thickness
polyethylene encasement*	AWWA C105
PVC sewer pipe and fittings	ASTM D3034 SDR 35
Vitrified clay pipe	ASTM C700 (extra strength)
laterals only:	
Cast iron soil pipe (4" & 6")	ASTM A74, service weight

* polyethylene encasement may be omitted if a corrosivity soils report provided per Appendix A of AWWA C105 indicates encasement is not needed. Alternate linings may be approved on a case-by-case basis,

New main sewers and/or laterals servicing exclusively industrial and commercial development may be limited to vitrified clay pipe depending on the proposed use.

Trench and pipe strength design shall be shown on the improvement plans per §5.700.,

2.307 Joints and Fittings

Joints and fittings shall be selected and installed to minimize infiltration and to prevent the entrance of roots throughout the life of the system. Ductile iron pipe joints and fittings shall conform to AWWA C110 or other approved joint for wastewater applications. Joints for PVC pipe shall be flexible elastomeric type conforming to ASTM D3212, Solvent weldedjoints for PVC pipe are not permitted. Joints for vitrified clay pipe shall conform to ASTM<£245r 4

Joining of pipe sections of unlike materials shall be accomplished using approved flexible band seals. Other joining methods shall not be used unless approved by the City Engineer.

2.400 Services

2.401 General

One service is allowed per parcel being served. Additional services may be specifically approved by the City Engineer in order to eliminate the need for on-site pumps or in other extreme circumstances,,

The minimum diameter for services (lateral sewers) shall be 4 inches.

A lateral sewer installed concurrently with a main sewer shall be of the same type and class of pipe material as the sewer main except where land use, cover or water main separation requirements indicate otherwise. For new services on existing mains, the lateral sewer may be of any approved pipe material as specified in §2,306,,

Size and depth of services is to be determined by the design engineer for the parcel being served subject to minimums contained in City Standards. Particular attention should be given to large, deep parcels. On-site lift stations may be necessary at upstream ends of mains, particularly on the east side of the City at the Central California Traction railroad,.

2.402 Monitoring Structures

A monitoring structure or sampling manhole/riser shall be installed per City standards near the back of walk where required by the City Engineer It shall be in a location accessible to City personnel at all times and may be considered as a cleanout in lieu of a separate required cleanout

2.403 Traps and Waste interceptors

Appropriate traps and waste interceptors shall be installed on services or on-site as determined by the City Engineer in conformance with the Lodi Municipal Code.

2.500 Manholes and Miscellaneous Structures

2.501 Manholes

Manholes shall be located in areas accessible *to* cleaning equipment and at:

- the end of each line;
- all changes in pipe grade, size, or alignment;
- all junctions of sewer mains and/or laterals 6 inches or greater in diameter;
- distances not greater than 500 feet in continuous paved areas
- Where access to manholes is restricted, the pipe and accessible manrr' located such that there is a hose lay of no greater than 500 feet from .„,..,,.» e^< .J».,, access point *to* all portions of the sewer.

24" diameter risers may be used in lieu of standard 48" manholes where the depth to the invert is less than 42 inches.

Manholes/risers may be required for inspection purposes at the end of stubs exceeding 25 feet in length

2.502 Drop Manholes

Drop manholes per Standard Plan 301 shall be provided where the inflowing pipe crown elevation is more than 2 feet above the crown elevation of the outflowing pipe.

2.600 Lift Stations

2.681 General

Lift stations shown on the Wastewater System Master Plan shall be designed per the following standards. Other lift stations shall be specifically approved by the City Engineer after consideration of all reasonable gravity flow alternatives. Design standards for temporary stations shall be determined on a case-by-case basis.

Lift station structures and electrical and mechanical equipment shall be located and designed such that they are protected from physical damage by the 100-year flood and will remain fully operational and accessible during the design storm.

The lift station shall be located off the travelled way of streets and alleys and shall be provided with paved vehicular access and appropriate security as required by the City Engineer.

2.602 Design

The lift stations shall be Ecodyne, Smith and Loveless Custom Series

Impressed current cathodic protection is required and shall be designed by a qualified corrosion control engineer.

California OSHA standards shall be observed in the design of all pumping station access structures

At least two pumps shall be provided for each pumping station.

If only two units are provided, they shall ha^o the same capacity. Each shall be capable of handling the peak flow Where three or me* e units are provided, they shall be designed to fit actual flow conditions and must be of such capacity that with any one unit out of service, the remaining units will have capacity to handle maximum sewage flows.

Design pumping rate shall be the peak inflow for the ultimate tributary area For Master Plan Stations, initial lower flow rates shall be considered in the design. It may be appropriate to provide an interim design with fewer or smaller capacity pumps. However, the station and site should be designed for ultimate conditions

Wetwells

The wetwell size and control setting shall be appropriate to avoid heat buildup in the pump motor due to frequent starting and to avoid septic conditions due to excessive detention time. Total pump starts shall be limited to no more than 10 per hour.

Wetwells shall be reinforced concrete with coal tar epoxy lining (Tnemec Hi-Build Tneme-Tar 46H-413, two coats; or approved equivalent).

The wetwell floor shall have a minimum slope of 1 to i to a hopper bottom The horizontal area of the hopper bottom shall not be greater than necessary for proper installation and function of the pump inlet.

Ancillary Fqnipmpnt

Ancillary equipment such as air release or other valve pits shall be provided as necessary including adequate ventilation and corrosion protection.

Flentrinal Equipment

All wetwell electrical equipment shall be explosion proof and meet National Electrical Code Class 1, Division 2, Group D requirements. All drywell electrical equipment shall be NEMA 4.

Telemetry equipment identical to the City's latest SCADA equipment shall be provided. Alarms shall be activated in cases of high water, power failure, pump failure, use of the lag pump, unauthorized entry, or any cause of pump station malfunction.

fitanrihy Pnwpr

Pump stations of greater than 0.25 mgd peak flow capacity (which include those shown on the Master Wastewater Collection System Plan) shall include permanent installation of standby power. Engines shall be provided with silencing equipment appropriate for the adjacent land use per zoning and General Plan standards.

Smaller capacity stations, where approved, shall either provide standby power or dual, manually switchable electrical feeds from separate transformers,

Potable water supply with a reduced pressure backflow prevention device (Febco Model 825) is required for all pump stations.

Instn mtinns anrl Fqnipmpnt

Three complete sets of operational instructions (including emergency procedures and maintenance schedules), special tools, and such spare parts (i.e., mechanical seals, wear rings, filters, etc.) as may be necessary shall be provided for all pump station equipment.

2.603 Force Mains

At average pump flow, a velocity of at least 2 feet per second shall be maintained

An automatic air relief valve shall be placed at high points in the force main to prevent air locking

Force mains shall enter the gravity sewer system at a point not more than 1 foot above the flow line of the receiving manhole.

Cleanouts and other special fittings shall be provided as required by the City Engineer

The force main and fittings, including thrust blocking, shall be designed to withstand normal pressure and pressure surges (water hammer)

The following standard pipe materials shall be used for force-main construction and shall conform to the applicable ASTM or AWWA specification (latest revision)

Pipe Material	Specification
Ductile iron pipe	AWWA C151
w/polyethylene lining &	ASTM D1248, Class C, 30 mil thickness
polyethylene encasement*	AWWA C105
PVC Plastic Pipe	AWWA C900

* polyethylene encasement may be omitted if a corrosivity soils report provided per Appendix A of AWWA C105 indicates encasement is not needed Alternate linings may **be** approved on a case-by-case basis.

Pipe strength (Class) shall be determined by accepted engineering principles and the pipe specification based on the design pressure.

Trench design shall be shown on the plans per §5 700.

Friction losses through force mains shall be based on the Hazen and Williams' formula with a value for "C" equal to 120.

Separation from Water Mains

Force main separation from water mains shall conform to applicable State Dept. of Health Services regulations (legal min), City Standards and appropriate construction details shall be shown on the plans.

Section 3 - Storm Drainage

3.100 General

3.101 Scope

These standards apply to all public stormwater facilities designed for installation within a public right-of-way or PUE in the City. Except where specifically noted in these Standards or as required as part of project approval, all stormwater facilities installed on private property for private use and ownership shall be designed and constructed in accordance with the provisions of the Uniform Plumbing Code, as adopted by the City.

Stormwater lines shall be designed in accordance with acceptable engineering principles and California OSHA Standards (legal min.), and shall conform to City Standards. Storm water collection facilities shall not be connected to a wastewater line except where specifically required by the City Engineer. Industrial waste sources shall not be connected or discharged into a stormwater line without a specific discharge permit.

These Standards do not cover all the applicable City, State and Federal requirements for storm quality and monitoring. (See §5 603 for additional discussion.,)

3.102 Submittals

The requirements listed below are based on projects subject to the City's Growth Management Plan. Developers and design engineers of projects not subject to the Plan should consult with the City Engineer to determine applicable and appropriate timing of submittals

npyplnpmpnt Plan fttafl[p] (preliminary plan for entire parrel /development)

Development plan submittals shall include a map showing the proposed project, existing storm drains in the vicinity of the project and new storm drains, 30" and larger proposed for the project

A table showing land use categories and acreage, C-factors and 100 year storm volume (in acre-feet) shall be provided.

Project Master Plan Stape (Hptailpri plan for entire parrel /development)

Prior to preparation of improvement plans for the first phase, a storm drain master plan for the entire project shall be provided for approval by the City Engineer.

The preliminary design submittal shall include the following items:

- A plan, 1" = 100' scale, showing the proposed system, preliminary pipe sizes, tributary subareas, existing and future tributary areas outside the project limits, zoning, projected land use, and any features affecting the system
- Hydrology and hydraulic calculations together with assumptions, charts, tables, references and methods used. A calculation sheet is provided in the Appendix which may be reproduced by the consulting engineer.
- A plan, preferably 1" = 100' scale, showing proposed street system, existing and proposed drainage system, tributary sub-areas (including offsite drainage), and peak flow in all pipes.
- A plan showing the hydraulic grade line (HGL), the proposed storm drain including slopes and sizes and top of curb in profile. Elevations should be shown at all changes in slope of the HGL, proposed storm drain and top of curb.
- Where the design includes additional tributary areas outside the project as required by the City and the developer wishes to obtain reimbursement for oversize pipes, the Engineer shall submit additional calculations and design for the project only in order to estimate the reimbursable portion.

Imprnvempnt Plan Stane (specific: improvement plans for portion heinn developed)

Improvement plans shall include the information listed in §5 200 and Appendix A-1.,

3.200 Design Flow

The Rational Method (Q = CIA) shall be used to determine runoff flow (Q) for areas less than " Larger areas require special consideration and should be discussed with the City Engineer prior design.

Minimum values for the coefficient of runoff (C) and time of concentration are as follows:

Land Use	C Factor	Tc (minutes)
Parks	0.20	30
R-1 and R-2 (Residential)	0.40	25
R-GA, R-MD and R-HD (Apartments)	050	20
Schools and Churches	0.50	20
Commercial	080	10
Industrial	090	10
Surface		
Pavement	0.95	
Roofs	080	
Compacted earth (no gravel)	0.75	
Lawn & Open Area	020	

Where a specific project is proposed, a composite C factor may be determined based on a weighted average of the surface C factors.

Values for rainfall intensity (i) for corresponding time of concentration shall be taken from Standard Plan 606 or computed from the formula shown.

The area (A) shall be the tributary drainage area in acres.

Preliminary estimates of detention volume (V) for development plan submittals shall be calculated based on V (acre-feet) = 0.4CA. (0.4 feet of rain = 100 yr, 48 hr. storm)

3.300 Pipe Design

3.301 Minimum Size

The minimum size for storm drain mains shall be 12-inch diameter.

All new catch basin laterals shall have a minimum diameter of 12 inches, except where an on-site service is connected to the catch basin. In such cases, the lateral shall be one size larger than the service.

3.302 Design Depth of Flow (Hydraulic Grade Line)

Manning's formula shall be used to calculate design flow, slope, velocity and pipe diameter relationships. The friction factor, "n", shall be 0.013 for all types of pipe.

Normally, due to the hydraulic grade line determined by the trunk line or downstream basin, storm drains are surcharged

The starting hydraulic grade line and assumed flow will be provided by the City at the downstream master plan line or intervening system if calculations are available. If the proposed project's flow is 5% or more above the assumed flow, the new calculations shall be extended downstream until the difference is less than 5% or a basin or pump station is reached.

All storm drains shall be designed for the peak flow entering the catch basin at the point of concentration and shall have a minimum of 1 foot of freeboard between the top of curb and the hydraulic grade line.

Note: The design does not need to check each catch basin. Flows may be calculated at manholes. However, the following catch basins are to be checked:

- the most upstream catch basin;
- the lowest catch basin;
- catch basins with on-site services;
- other potentially critical catch basins as designated by the City Engineer.

3.303 Slope

Storm drains shall have minimum slopes per the follov

Size (in.)	Minimum Slope (ft/ft)
12	0.0019
15	0 0014
18	0 0011
21	0.0009
24	0.00075
30	0.00055
36	0.00044
42	0.00035
48 +	0.00030

The above slopes are intended to provide a velocity of 2.0 feet per second when flowing half full regardless of the slope of the hydraulic grade line. (In the City's surcharged system, velocities based on the design hydraulic grade line are well below 2 feet per second except in trunk lines.)

Pipes with lower velocities shall use available fall and shall be specifically approved by the City Engineer.

Maximum velocity shall not exceed 10 feet per second.

Storm drains shall be designed with uniform slope between manholes.

Siphons are not be permitted (See §3.501 regarding separation manholes).

Catch basin laterals shall have a minimum fall of 0.10 foot between the catch basin and manhole. Desirable fall is 0.30 foot or more.

3.304 Vertical Alignment

The minimum cover on main line storm drains shall be 2 feet in residential streets and 2!/a feet in all other streets. See §5 701 for structural considerations.

A minimum vertical clearance of 3 inches shall be maintained between a wastewater lines and other underground utilities. Clearances to water mains shall be the same as that for wastewater lines. (§2.304; Standard Plan 415)

In general, at points of convergence of pipes of various sizes, the top of pipe elevations shall match, or, when approved by the City Engineer, the maximum difference in flow lines shall be less than 4 feet. This does not apply to catch basin laterals.

3.305 Horizontal Alignment

Horizontal alignment of storm drains shall be per the applicable requirements for wastewater lines (§2.305; Standard Plan 415).

Required clearances to water mains shall be the same as wastewater lines

Curved storm drains are allowed However, joint deflections or pipe curvature shall not exceed the pipe manufacturer's recommendations The following table may be used as a conservative guide. If a shorter radius is desired, the appropriate design information (i.e. short pipe lengths, radius fittings, etc.) shall be shown on the plans

Minimum Radius of Bending Circle (ft.)

Pine Size	Ductile iron	PVC	VCP	Cone*
12	190	320	200	200
15	n/a	390	260	240
18	n/a	n/a	n/a	290
21	n/a	n/a	n/a	340
24	n/a	n/a	n/a	390
27	n/a	n/a	n/a	440
30	n/a	n/a	n/a	480

• Concrete pipe figures assume 6 ft pipe length and 3/8" joint pull; plans should indicate required dimensions and require manufacturer's certification

3.306 Pipe Materials

The following standard pipe materials shall be used for storm drain construction and shall conform to the appropriate American Society of Testing and Materials (ASTM) and American Water Works Association (AWWA) specifications (latest revision):

Pipe Material	Specification
Concrete pipe	ASTM C14
Ductile iron pipe	ASTM A746
w/cement lining &	AWWA C104, std. thickness
polyethylene encasement*	AWWA C105
PVC sewer pipe and fittings**	ASTM D3034 SDR 35
Reinforced concrete pipe	ASTM C76
Vitrified clay pipe	ASTM C700 (extra strength)

* polyethylene encasement may be omitted if a corrosivity soils report provided per Appendix A of AWWA C105 indicates encasement is not needed

** PVC pipe is not allowed as a main in commercial and industrial areas or in arterial streets

Cast-in-place concrete pipe, 30 inches and larger, may be used when specifically approved by the City Engineer. Cast-in-place pipe will not normally be permitted in existing streets.

Easement lines shall pass the same leakage tests as wastewater lines.

Trench and pipe strength design shall be shown on the plans per §5 700.

3.307 Pipe Joints

Storm drain joints shall be designed and installed to minimize infiltration and to prevent the entrance of roots throughout the life of the system.

Joints for concrete pipe shall be rubber gasketed joints per ASTM C443. Mortar joints shall be used only when specifically approved by the City Engineer.

Joints for vitrified clay pipe shall conform to ASTM C245. Joints for PVC pipe shall be flexible elastomeric type conforming to ASTM D3212,

Joining of pipe sections of unlike materials shall be accomplished using approved flexible band seals. Other joining methods shall not be used unless approved by the City Engineer.

3.400 Services

3.401 General

In general, only one storm drain service is to be provided per parcel served Additional services may be approved by the City Engineer depending on the on-site layout, available mains and land use/monitoring requirements.

Storm drain services are provided to improve public health and safety and minimize inconvenience created by on-site drainage running over the sidewalk and in the gutter. Services carrying process, wash or other wastewater shall be specifically approved by the City Engineer in conformance with the Lodi Municipal Code.

Parcels over 1 acre (net) shall have an on-site collection system connected to the public system.

Industrial and commercial parcels under 1 acre shall utilize on-site drains or thru-the-curb drains to minimize drainage over the sidewalk.

It is recommended that roof drains of large buildings (carrying only drainage) be pipe thru-the curb or connected to an underground system at the property line downstream of any required monitoring device or trap.

Underground services shall connect to the public system at a manhole or catch basin. A direct tie may be approved where a suitable on-site access structure is provided and the criteria per §3.501 are met.

3.402 On-site Design Requirements

For industrial land use and commercial uses involving potential water quality hazards (including, but not limited to: automotive service, gas stations, and car washes) the following requirements shall apply:

- All storm drainage shall be picked up in an on-site drainage system, unless approved otherwise.
- The on-site drainage system shall be tied to the City's storm drain system, either at the back of a City catch basin or at a storm drain manhole on the City's system
- An approved sand and oil trap shall be constructed on new storm drain discharge lines The City may also require a sand and oil trap on existing storm drain discharge lines or through-the-curb drains.
- All sand and oil traps shall be readily accessible and on the street side of all fences and gates and not in the sidewalk area.

- No storm drainage will be allowed to flow over the curb, gutter, and sidewalk into the street Roof drainage may be tied directly to a "through-the-curb drain" per Standard Plan 129 Exceptions are driveway approaches and landscaped areas adjacent to sidewalks
- With approval from the City Engineer, smaller industrial parcels may be allowed to drain through the curb face. This approval shall depend upon existing street conditions, the location of City storm drain facilities, and the size and use of the parcel On-site drainage must still flow through a sand and oil trap.

Also, see §5 603 regarding erosion control

3.500 Manholes and Miscellaneous Structures

3.501 Manholes

Manholes shall be placed at the intersections of all storm drains including laterals, at all locations where there is a change in size, change in horizontal or vertical alignment and at the ends of all permanent lines.

Manhole spacing shall conform to the following limits:

Diameter	Maximum Spacing
12" to 30"	500 feet
33" to 54"	750 feet ....
60" and over	1000 feet

Manholes will not be required at laterals where all the following conditions are met:

- maximum size of catch basin lateral is 15 inches, and;
- the main storm drain has a diameter of 48 inches or larger, and;
- the maximum top of curb to invert depth at the catch basin is 4 feet, and;
- no other existing or future manhole is within 100 feet along the main storm drain centerline, and;
- connection is made in conformance with Standard Plan 305.

24" diameter risers may be used in lieu of standard 48" manholes where the depth to the invert is less than 42 inches. Where the main is over 42 inches in diameter or where large pipes intersect such that a standard 48" manhole is not practical, a special design, usually using standard, prefabricated sections, shall be shown on the plans. On cast-in-place pipe, saddle manholes per Standard Plan 302 may be used.

Manholes/risers may be required for inspection purposes at the end of stubs exceeding 50 feet in length

Special "separation" manholes may be designed where wastewater and storm lines intersect due to grade restrictions. Criteria and details are to be approved by the City Engineer on a case-by-case basis

3.502 Catch Basins

Side inlet catch basins (SICB) shall be located at all gutter low points and shall be spaced in such a manner that design storm flows will not encroach into the travel lanes or exceed the curb height. In addition, at special driveways the depth of flow shall not exceed 3 inches. Standard Plan 608 provides a Hydraulic Street Capacity Chart for use in determining whether the design flows encroach into the travel lanes.

The total gutter run contributing to any catch basin shall not exceed 1,000 feet. It is desirable *to* locate catch basins on the BCR or ECR which will intercept the most runoff and also keep the main pedestrian crossing as dry as possible.

Drop inlet catch basins may be constructed only in alleys, parking lots or as temporary installations on unimproved streets where curb and gutter has not yet been installed. In gutters where a new driveway is being installed that conflicts with an existing side inlet catch basin, upon approval of the City Engineer, a drop inlet catch basin may be installed as a junction box and the SICB must be relocated.

3.600 Pump Stations

The only pump stations permitted are those included in the Master Storm Drain system and private, on-site stations serving single parcels

Master Storm Drain system stations shall be custom designed for the particular project

Private systems shall be designed according to the applicable Building, Plumbing, Mechanical and Electrical Codes adopted by the City.

3.700 Detention Basins

3.7011 General Requirements

The Master Storm Drain system is based on the use of large, publicly owned and maintained detention basins in order to meet discharge flow limitations to downstream facilities or receiving waters. Privately owned and maintained drainage basins are prohibited except in the following circumstances:

- temporary facilities approved by the City Council, in which the design is planned for ultimate connection to the City system;
- permanent facilities specifically approved by the City Council;
- facilities in existence at the time of annexation until the property is developed or otherwise improved and falls under City development requirements.

3.702 Temporary Basins

Basins Serving Single Parcels

If approved, temporary basins on private property to serve single, one-ownership parcels shall be designed with the following criteria:

- A 48-hpur, 10-year storm, total rainfall of 3.3 inches shall be used if a reasonable outlet is provided. If no disposal other than evaporation, percolation or irrigation is provided, a 48-hour, 100-year storm, total rainfall of 4.8 inches, shall be used.
- The maximum water surface of the basin shall be 1 foot below the elevation of the top of curb at the lowest catch basin inlet within the tributary area and a maximum of 1 foot above the design hydraulic grade line at the basin.
- Fencing shall be provided around all basins greater than 3 feet in depth.
- Adequate all-weather access shall be provided
- The tributary drainage system shall be designed to connect to the City's future storm drainage system.
- Any additional requirements placed as a condition of approval shall be incorporated into the design,

Basins Serving Multiple Parcels

For temporary basins serving multiple parcels, the following criteria should be considered in its design. The final design shall be as approved by the City Engineer in accordance with City Council requirements of approval.

- The area cannot be reasonably served by a public storm drainage system.
- The Developer shall pay the City for maintaining and operating the storm water drainage system and appurtenances.
- The basin may be deeded to the City as long as the area is used as a ponding basin. When the City of Lodi storm drain system is expanded to serve the area, the parcel of land reverts back to the developer's ownership and shall be restored back to original condition by the owner
- A minimum 10-foot wide access road shall be provided around the basin
- The maximum side slope shall be 6:1.
- Six-foot chain link fencing with redwood lath filler shall be provided around the basin with double 8-foot vehicle gates and one 3-foot personnel gate
- The basin shall store a 10-year, 48-hour storm (3.3 inches) for the service area.
- Facilities shall be provided to enable the basin to be pumped or drained into a public permanent system within a 48-hour period. The pump station shall have 50% standby and a minimum of 2 pumps.
- The maximum design water surface of the basin shall be a minimum of 1 foot below the elevation at the top of curb of the lowest catch basin inlet within the tributary area and a maximum of 1 foot above the design hydraulic grade line at the basin.
- The tributary drainage system shall be designed to connect to the City's future storm drainage system.

3.903 Permanent Basins

Permanent basins, including fencing and other details, shall be specifically designed to the site, using the above criteria for basins serving multiple parcels except that a 48-hour, 100-year storm, 4.8 inches total rainfall, shall be used. The design shall be compatible with the Storm Drain Master Plan. The following table summarizes hydraulic design criteria for the basins:

Drainage Area/Basin		Elevation of: Maximum Water Surface	Design Hydraulic Grade Line
A-1	Kofu Park	37.0	36.0
A-2	Beckman Park	33.0	32.0
B-1	Vinewood Park	35.0	34.0
B-2	Glaves Park	360	35.0
C	Pixley Park	470	46.0
D	Salas Park	392	38,2
E	Westgate Park	34.5	33.5
F	(future)	270	26,0
G	DeBenedetti Part <	270	26.0
H	(drains to Mokelumne River, see below)		
I	(future)	23.0	220

Existing outfalls for areas tributary to the Mokelumne River have been designed under various standards. Recently installed outfalls have been designed on the basis of a River hydraulic grade line one foot below the 100 year flood elevation. However, since the design and installation of these outfalls, newer FEMA flood studies have raised this flood elevation. Since no new outfalls are contemplated under the Storm Drain Master Plan, new standards have not been developed. Hydraulic design criteria for new storm drains lines in the H area shall be determined on a case by case basis by the City Engineer.

SECTION 4 - Water

4.100 General

4.101 Scope

These standards apply to all public water facilities designed for installation within a public right-of-way or PUE in the City and are limited to mains and services 12 inches or less in diameter, Standards and requirements for larger sizes will be determined by the City Engineer as needed In residential developments, on-site mains and hydrants for fire protection shalt be public. Other on-site facilities, unless specifically noted in these Standards or as required as part of project approval, shall be private and shall be designed and constructed in accordance with the provisions of the Uniform Plumbing Code, as adopted by the City. (See §4.401 re services)

Water lines shall be designed in accordance with acceptable engineering principles, California OSHA Standards (legal min), and California Department of Health Services Regulations, Title 22, Chapter 16, California Waterworks Standards (legal min.), and shall conform to City Standards.

4.102 Submittals

The requirements listed below are based on projects subject to the City's Growth Management Plan. Developers and design engineers of projects not subject to the Plan should consult with the City Engineer to determine applicable and appropriate timing of submittals.

Development Plan Stafp (preliminary plan for entire parrel /development)

Development plan submittals shall include a map showing the proposed project, existing wells, existing water mains in the vicinity of the project and new mains, 10" and larger proposed for the project.

A table showing land use categories and acreage, average and peak hour flows and maximum day plus estimated fire flow shall be provided (all flows in gpm, except average in mgd)

Projprt Master Plan Starip friptailpri plan for entire parrpl /ripvplnpmpnt)

Prior to preparation of improvement plans for the first phase, a water master plan for the entire project shall be submitted for approval by the City Engineer. The plan shall show size and location of all proposed mains

Flow and pressure calculations are required for commercial, industrial and medium and high density residential developments. Calculations will not normally be required for low density residential developments unless there is a question regarding the need for looping.

Where the design required by the City includes capacity above that needed to serve the development and the developer wishes to obtain reimbursement for oversize pipes, the Engineer shall submit calculations and design for the project only in order to estimate the reimbursable portion.

Improvement Plan Stan.e (specific improvement plans for portion heinq developed)

Improvement plans shall include the information listed in §5 200 and Appendix A-1.

See §5.200 regarding timing of well abandonments and improvement plan approval.

4.200 Design Flow

Unless City of Lodi metered information or data from other agencies is provided or required, the following water demands shall be used:

Land Use	Unit Demand	Peaking Factors Max. Day	Max. Hour
Residential	285gpcd	2.24	3.28
Commercial/Office	2750 gpad	2.24	3.28
Industrial	2200 gpad	2.24	3 28

gpcd = gallons per capita per day gpad
= gallons per acre per day

Per capita and density figures per $2.200 shall be used unless specific project information is available.

Fire flow for specific projects shall be as provided by the Fire Marshal. For preliminary studies, the highest applicable case of the following fire flow shall be used:

Land Use	Fire Flow
Low Density Residential	2000 gpm
Medium & High Density Residential	3000 gpm
Commercial & Industrial	4000 gpm

4.300 Pipe Design

4.301 Minimum Size

The minimum size pipe used for new water mains shall be per the following table:

Location/adjacent land use	Size (inches)
As shown in Water Master Plan	10,12 as indicated
Commercial & Industrial	8
School, other Public Use	8
High Density Residential	8
Low & Medium Density Residential	6
Unsupported looped length exceeding 800 ft.	8
Residential dead-end with DO. fire hydrant	4

Larger sizes may be required based on required fire flow or service demand.

Permanent dead-end runs shall be no longer than 250 feet unless specifically approved by the City Engineer. Eight-inch mains shall be used on dead-end runs which serve fire hydrants. Reasonable looping of water mains will be required; the maximum unsupported length of a main is 1300 ft.

The following table may be used as a guide for maximum length (ft.) of dead-end mains:

Pipe Diameter	Required Fire Flow (gpm) 2000	3000	5000
6" lateral	100	N/A	N/A
8"	600	275	N/A
10"	1800	850	325
12"	5000	2400	900

4.302 Design Pressure

The system shall be designed to maintain a minimum residual pressure of 20 psi at the service point or fire hydrant under the worst case of either:

- maximum day flows plus fire flow, or;
- peak hour flow

Calculations for individual developments may assume 4000 gpm at 45 psi is available at the point of connection to an 8" or larger, looped line. Other circumstances will require a spec determination by the City Engineer.

The Hazen-Williams formula should be used to calculate design flow, pressure loss, velocity and pipe diameter relationships. The coefficient of friction, "C", shall be 110 for pipes 6" and smaller, 120 for 8" and 10", and 130 for 12" and larger pipes unless loss at fittings is calculated separately using equivalent length or other approved methods. In such cases, a "C" of 130 may be used.

4.303 Slope

There are no slope requirements for water mains However, inverts and pipe slopes shall be shown on the profile plans as required in the Appendix.

All high points within the system shall be located at fire hydrants or permanent blow-offs

4.304 Vertical Alignment

The minimum cover on water mains shall be 3 feet. Water main depth should be kept below 5± feet

When crossing a wastewater or storm line, it is desirable that the water main be installed above with a clearance of 12 inches. The minimum vertical clearance per Standard Plan 415 shall be maintained.

4.305 Horizontal Alignment

Water mains shall be installed within street rights of way unless an easement installation is specifically approved by the City Engineer. Alignment shall be parallel to the street centerline wherever possible.

Parallel lines on each side of the street may be required on major arterials or other locations where crossings are determined inappropriate by the City Engineer.

The horizontal alignment of water lines in new streets, easements and private streets shall be as shown on the appropriate City of Lodi Standard Plan. In existing streets and other special cases (such as looped streets in which the utilities may be located concentrically to avoid crossings), the alignment may vary from the Standard Plans, but in no case shall there be less than 10 feet horizontal clearance to a wastewater, storm or industrial waste line, except as specifically approved by the City Engineer in accordance with State Department of Health Services policies.

When limited right-of-way or other controls are present reduced clearances per Standard Plan 415 may be approved by the City Engineer.

Curved water mains are allowed however, joint deflections or pipe curvature shall not exceed the pipe manufacturer's recommendations. The table in 32.305 may be used as a conservative guide If a shorter radius is desired, the appropriate design information (i.e. short pipe lengths, radius fittings, etc) shall be shown on the plans.

4.306 Pipe

The following standard pipe materials shall be used for water main construction and shall conform to the appropriate American Water Works Association standards (latest revision):

Pipe Material	Standard
Asbestos-Cement	AWWA C400, Class 150 minimum
Ductile Iron	AWWA C151
w/cement mortar lining & seal (std thickness)	AWWA C104
polyethylene encasement*	AWWA C105
PVC (iron pipe O D .)**	AWWA C900, DR 18 (Class 150) minimum

* polyethylene encasement may be omitted if a corrosivity soils report provided per Appendix A of AWWA C105 indicates encasement is not needed

** PVC mains are not allowed in industrial and commercial areas if fire services are not installed at the time of main installation due to problems with hot-tapping installed mains. It is recommended that 8" combination hydrant/fire service taps be installed with the mains due to Fire Code requirements for sprinklers on commercial and industrial buildings

Trench and pipe strength design shall be shown on the plans per §5.700

4.307 Joints

Joints in water mains shall match the type of pipe being used, except:

- Solvent welded PVC is not allowed;
- Mechanical joints are only allowed at fittings;
- Cast-iron repair/adapter couplings may be used where approved by the City Engineer

4.400 Services

4.401 General

One service is allowed per parcel being served with the following general exceptions as specifically approved by the City Engineer:

- in residential developments with on-site public mains, one standard service per dwelling unit may be provided;
- in large parcels with separate buildings, one standard service per building may be provided (individual shut-offs per unit are required)

Due to the variety of building and main configurations and backflow requirements, the above requirements/exceptions are not specific. Details of each project shall be specifically approved by the City Engineer.

All commercial and industrial water services shall be metered. Residential services shall be metered in accordance with City Policies

4.402 Domestic Service

The minimum size service is 1 inch per Standard Plan 403. Larger diameter services shall be per Standard Plan 406 (1*V2"* & 2") and Standard Plan 407 (4" & larger). Size of services is to be 'determined by the design engineer for the parcel/land use being served subject *to* minimums contained in City Standards.

Backflow devices shall be provided on services as required by the Lodi Municipal Code and shall conform to the appropriate Standard Plan. Sufficient space shall be provided between the service box and the first downstream tee or cross to allow future addition of a backflow device.

4.403 Fire Service

Private on-site fire protection systems include hydrants and building sprinkler systems installed per the requirements of the City Building and Fire Codes. Fire and domestic systems shall be kept separate on-site, downstream of the service box and shall be valved such that either system can be shut-down without affecting the other These Standards cover requirements imposed by the Public Works Department in its role as a water utility, mainly in the area of backflow and cross connection prevention as required by State law In addition, the City Fire Department requires that the minimum design requirements and construction specifications for public water mains and fire hydrants be applied to private on-site fire protection systems.

Backflow requirements vary depending on the type of on-site system and the degree of hazard *to* the public system Standard classification of on-site systems is as follows:

Class I - Direct connections from domestic water mains only; no pumps or reservoir; no physical connections *to* other water supplies; no anti-freeze or other additives of any kind; and all sprinkler drains discharge to atmosphere.

No backflow device required.

Class II - Same as Class I, except that booster pumps are installed in the service lines from the public main. (An approved pressure sustaining valve is required on booster systems) A connection for a fire pumper truck (Fire Dept. Connection or FDC) may be provided. The Fire Dept, shall not introduce any additives nor draft from outside water sources.

No backflow device required.

Class III - Direct connection *to* public water main, with on-site storage or pressure tanks. All storage facilities must only be filled by or connected to the public water supply, and the water in these facilities must be maintained in a potable condition.

Double Check Valve Assembly (DC) required.

Class IV - Directly supplied from public mains similar to Classes I & II, with an unapproved auxiliary water supply on or available to the premises, or a Fire Dept. connection for trucks with additives or an outside supply.

Reduced Pressure Principle Assembly (RP) required.

Class V - Directly supplied from public mains and interconnected with unapproved auxiliary supplies, such as: pumps taking suction from reservoirs exposed *to* contamination, or from rivers, ponds, wells, or other industrial water systems; or systems where antifreeze or other additives are used.

Reduced Pressure Principle Assembly required.

Class VI - Systems supplied from both an industrial water system (private system) and the public system, with or without gravity storage or pump suction tanks.

Special Determination required.

Typical types of on-site systems and the backfiow requirements are described below:

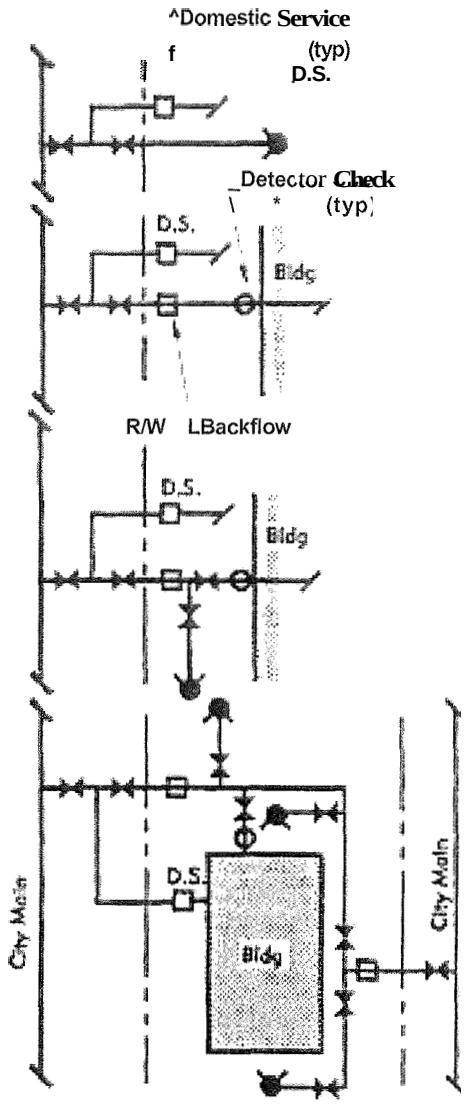

	Backfiow Device Required for Class:					
	I	II	III	IV	V	VI
Hydrants only; no sprinklers or other supply	None*	None*	N/A	N/A	N/A	N/A
Sprinklers only; no FDC or other supply	None*	None*	NIA	NIA	RP	N/A
Sprinklers and; hydrants w/FDC	None*	None*	DC	DC	RP	S..D
More than one connection to City system	DC*	DC*	DC	RP	RP	S.D

S.D.. = Special Determination

(Domestic service valves not shown)

* State law prohibits backfiow devices on Class I or II fire systems. Interpretation by the State Fire Marshall allow backfiow devices where "special conditions" exist. These special conditions include:

- Underground fire lines with less than 10 ft parallel clearance to wastewater lines or other pipelines carrying toxic materials.
- Water for one site is (or could easily be) looped to the public system.
- Occupancy involves use, storage or handling of type and quantities of materials in a manner which could present a significant health hazard to the domestic supply
- Premises having usually complex piping systems which already necessitate a backfiow device on the domestic service.

Additional Public Works Dept. requirements are:

- Backflow devices shall be approved by the City Engineer (USC Foundation for Cross Connection Control listing required) and the Fire Marshal (UL or FM listing required).
- Detector checks (i.e., bypass meter to detect unauthorized use) are required on building sprinkler systems; not on hydrant systems.
- Domestic service may be taken from fire service lateral outside the R/W and shall be kept completely separated from the on-site fire system.
- An approved pressure sustaining valve is required on all booster pump installations.
- An Encroachment Permit is required for any work or facility to be located in the right-of-way.
- Piping adjacent: wastewater lines or other "special conditions" described above may require backflow devices on Class I and II systems or higher degrees of protection on other Class systems.

Fire Dept. requirements that are related to Public Works standards and specifications include the following:

- Sufficient on-site valves shall be provided to isolate individual hydrants and any sprinkler system.
- The location of all on-site facilities shall be approved by the Fire Marshal.
- Outside stem & yoke (OS&Y) or other approved indicator valves are required on building sprinkler and other above ground valves
- ^' re tydrants, mains, valves and backflow devices shall be installed in accordance with City of Lodi Public Works Construction Specifications and Standard Plans.

The above requirements are general minimums and may be increased for unusual or other high hazard conditions. Owners may install devices providing a higher degree of protection, such as an air gap separation system (AG) in place of an RP device.

4.500 Valves, Fire Hydrants and Miscellaneous Appurtenances

4.501 Valves

Valves on mains shall be spaced and located in conformance with the following criteria:

- 400-foot maximum spacing in commercial, industrial and public use or other high value areas.
- 600-foot maximum spacing in residential areas.
- Water mains shall be valved on each side of railroad, freeway and canal right-of-way crossings. (These valves shall be located outside of the right-of-way being crossed unless easy access is provided)
- At "tees", valves are required as follows:
  - o 2 valves where one leg is less than 8 inches, with one of the valves being on the smaller leg. ° 3 valves where all legs are 8 inches or larger.
- At "crosses", valves are required as follows:
  - o 3 valves where one or more legs is less than 8 inches with valves on each of the smaller legs.
  - ° 4 valves where all legs are 8 inches or larger.,
- At ends of mains or on stubs such that future extensions will not interrupt service.
- No closer than 15 feet from a blow-off.

The above valve spacing requirements assume small lot sizes and numerous connections and may be reduced where there are a minimal number of connections in-between valves.

4.502 Fire Hydrants

Fire hydrants shall be designed and installed per Standard Plan 401. Where the main is located within 15 feet of the hydrant location, the valve on the hydrant lateral shall be located at least 5 feet offset from the hydrant station and the lateral installed with a 90° elbow, (ie. no short, straight hydrant laterals)

Fire hydrants shall be supplied from the largest available main.

Fire hydrants shall be fed from 2 directions unless specifically approved by the City Engineer and Fire Marshal

Public fire hydrant spacing and distribution shall be determined as follows:

- At 300 feet spacing in high density, commercial, industrial zoning or high-value areas;
- At 500 feet spacing in low density residential areas;
- On arterials, the above spacing shall apply to both sides of the street;
- A fire hydrant shall be located within 200 feet of the radius point of all cul-de-sacs;
- On-street hydrant spacinq may be reduced at reverse frontage locations or in coordination with on-site nydrants as approved by the Fire Marshal.

On-site private hydrants shall be located by the Fire Marshal.

4.503 Blow-offs and Temporary Connections

Blow-offs per Standard Plan 404 shall be located at the ends of all permanent dead-end mains

Temporary blow-offs per Standard Plan 409 shall be located at the ends all dead-end mains planned for future extension and 4 inch and larger services per the appropriate Standard Plan.

The design of new mains shall include determination of the location and type (with or without meter/backflow assembly) of temporary connections per Standard Plan 409. The meter/backflow assembly shall be located to provide optimal flow for main flushing and to minimize disruption of public traffic upon device removal. The meter/backflow assembly is not required on new systems with less than 150 feet of 6 inch or larger pipe.

4.504 Thrust Blocks

Water main thrust shall be taken into account is designs. At locations planned for extension, flanged fittings may be required.

In areas with unstable soils, a special design for thrust blocks is required and shall be shown on the plans; Standard Plan 405 is sufficient in other areas.

Section 5 - Miscellaneous Requirements

5.100 Maps and Easements

5.101 Maps

Final Maps and Parcel Maps shall be prepared in conformance with State laws and City ordinances. Applicable certificates and statements shall conform to the appropriate Standard Plan. Final Maps shall be submitted to the County Surveyor for checking prior to filing with the City Engineer Parcel Maps shall be submitted directly to the City Engineer for checking and processing.

Records of Survey shall be prepared in conformance with State laws and shall be submitted to the County Surveyor for checking and processing

In order to expedite the review process, the City will accept maps to check easements and other City requirements prior to completion of the County technical review. Initial submittals shall consist of three copies of the map. Legal descriptions and title reports may also be required on the initial submittal. (Note, these Standards do not include all the applicable map and subdivision processing requirements, ie: improvement security, insurance, agreements, etc.)

Survey monuments shall be provided at all new lots/subdivisions per the following:

Location	Required Monument
Rear or Interior Lot Corner	5/8" dia. x 24" lg. iron rod at corner or offset if corner is obstructed.
Front (street) Lot Corner	5/8" dia. x 24" lg. iron rod at corner or chiseled cross in concrete offset from corner (show detail on map).
Street Right-of-way	3/4" dia. x 30" lg. iron rod with surveyor's mark at angle points and points of tangency.
Street Centerline	3/4" dia, x 30" lg iron rod with surveyor's mark in City Standard monument box at: (a) intersections of new and existing streets; (b) end of cul-de-sac; (c) points of tangency except where line of sight from other monument exists within the Right-of-way (the intent is to reduce the number of closely spaced monuments); (d) elsewhere, where line of sight is not practical due to length of curve or other obstruction.
Subdivision Boundary	3/4" dia x 30" lg. iron with surveyor's mark at corners. No monument is required at the intersection of street centerline and subdivision boundary.

The above are minimum requirements and are not intended to restrict or otherwise interfere with the judgement of Professional Engineers and Licensed Land Surveyors.

5.102 Easements

Public utility easements shall be shown on maps as required in these Standards and as part of development approval. If no map is involved or where specifically approved by the City Engineer, the easement may be granted by separate deed.

The width of all public utility easements shall be shall be as determined by the appropriate utility. For wastewater, storm and water lines, the minimum width is 8 feet. Additional width will be required for:

- lines larger than 15 inches;
- lines deeper than 5 feet;
- locations where the easement is not entirely on one lot;
- locations where multiple lines are installed within the easement.

Appropriate easements and temporary construction easements and/or limitations and conditions shall be shown on the plans. Particular attention should be given to trench excavations and existing trees and improvements to remain and future building foundations.

5.200 Improvement Plans and Specifications

All public improvements shall be shown on plans prepared by or under the direction of a Registered Civil Engineer except for minor work done under an Encroachment Permit or other circumstances approved by the City Engineer. Privately owned improvements may be shown for information, and in some cases, may be required to be shown to avoid conflicts. Distinction between public and private improvements shall be clearly indicated.

The design engineer shall contact electric, telephone, gas, cable TV and any other applicable agencies for locations of existing utilities which shall be shown on the plans. Plans for existing underground City water, wastewater, storm and traffic facilities shall be obtained from the office of the City Engineer. The design engineer shall field verify location and elevation of any existing facility affecting the design of the new improvements.

Plans shall be drawn on ANSI D (22" x 34") size veilum or mylar with City Standard title blocks per the Standard Plans. (The City will furnish preprinted vellum or AutoCAD® file upon request.) Sheet titles and drawing numbers will be assigned by City staff.

The Appendix contains additional information and requirements for improvement plans including:

- General Notes - required on plans;
- Bid Item Order - for improvement security estimate;
- Plan Submittal Checklist - indicates required items on plans which must be filled out and signed by the Engineer upon submittal of improvement plans;
- Wastewater flow calculation sheet (an Excel® spreadsheet file is available);
- Storm drainage calculation sheet (an Excel® spreadsheet file is available).

Since the plans will refer to City Construction Specifications, it is not required that the design engineer prepare additional specifications. However, in cases where the work is not adequately covered by the City Specifications, the plans shall provide the additional information necessary. If separate specifications are prepared, they shall be submitted for review and approval.

The plans shall identify required contractor submittals. These include:

- Asphalt mix design;
- Pipe materials and trench section to be used (when alternatives are allowed);
- Other agency rights-of-entry (list);
- Electrical and mechanical equipment;
- Any other item of work where alternatives are allowed or the Contractor wishes to do the work in a fashion other than as shown on the plans or as required by the City.

The design engineer is responsible for the design and accuracy of the plans The City check and approval does not relieve the owner/developer from changed or unforeseen conditions, errors contained in the plans or from complying with City, State, Federal or other agency requirements that may be determined to apply during the course of construction. In addition, owner/developer shall comply with any changes required by the City Engineer during the course of work that are necessary or required to complete the work in conformance with City Standards.

Rights-of-way, PUE's and construction easements shall be shown on the plans The developer/owner is responsible for obtaining such rights-of-way and easements subject to the provisions of $66462 5 of the Subdivision Map Act For work in the right-of-way of other agencies, the design engineer/owner shall obtain the permit or furnish the necessary information in order for the City to make the application if so required by the agency The appropriate permit conditions shall be included in the design, The plans shall include a requirement that the Contractor obtain a right-of-entry from the agency under the terms of the permit

Required utility relocations shall be shown or referenced on the plans as appropriate. Notes requiring the Contractor to arrange for utility relocations are discouraged since this generally delays the project.

Items to be salvaged and either reused or delivered to the City shall be clearly identified on the plans. Generally, any reusable sign, casting, metal barricade, or other item determined by the City Engineer shail be salvaged and delivered to the City per the Construction Specifications unless they are approved for reuse in the project

Completed San Joaquin County well and septic tank abandonment permits shall be submitted prior to City approval of the *y.^.* J 'or map. This requirement may deferred upon specific approval of the City Engineer if the facilities are in use and are needed during construction.

The plans shall include a requirement for project/job-site signing on projects over 2 acres is size or as required by the City Engineer on projects involving significant disruption of roadways. The sign shall include the names and telephone numbers of the contractor, project engineer/manager and developer/owner.

It is recommended that a pre-construction conference be conducted on all but minor projects. A City representative(s) will attend and the City will provide a meeting room upon request

5.300 As-built Plans and Certifications

The developer's engineer shall submit the following certifications, plans and other information prior to acceptance of the project:

- Certification that all monuments have been set as shown on the Final Map or Parcel Map;
- Certification that all public wastewater, storm and water lines located in public utility easements were placed within the limits of the easement as shown on the plans;
- Survey notes from a leveling survey of all benchmarks placed within the project. The survey shall start and close on the benchmark used in the design of the subdivision and shall close within 0.02 feet;
- As-built plans showing elevations of utilities and top of curb at all locations designed for future extension;

In addition, where construction problems or other indications exist that improvements are not located within the right-of-way as shown on the plans, the City Engineer may require a topographic or other survey.

The above certifications shall consist of a City Engineer approved letter, map, or other form, signed and stamped by the responsible Registered Civil Engineer or Licensed Land Surveyor, as appropriate.

5.400 Traffic Control

Applicable traffic control requirements shall be included in all plans. References to City and State of California Department of Transportation (Caltrans) specifications and standards are acceptable where the work is primarily not located with the travelled way of existing streets.

Street and lane closures will require specific details to be shown on the plans. Such details may include restrictions on the time of day and duration of work.

5.500 Soils Reports

Soils reports shall be provided for all improvements related to Final Subdivision Maps and may be required for other projects depending on the nature of the project and its location. The report shall include the following as applicable:

- Location map showing test locations and street layout;
- Statement regarding presence of critically expansive soils or other adverse soil conditions, which if not corrected, would lead to structural defects. Additional analytical work may be required depending on the initial findings;
- R-values per Caltrans test method 301; one test per 600+ feet of street or at locations of visible changes in material, with a statement that the depth of the sample is consistent with final subgrade depth based on the grading plan;
- Optimum moisture and diy density per Caltrans Methods 216 and 226 at each R-value test location;
- Soil corrosivity tests as appropriate where buried steel structures are proposed (such as lift stations) or per Appendix A of AWWA C104 where use of ductile iron pipe is proposed;
- Trench design values and recommendations (see §5.701);
- Applicable information required per Chapter 70 of the Uniform Building Code;
- Grading recommendations and specifications if more restrictive than these Standards.

The soils report shall be signed by a Registered Geotechnical Engineer and referenced on the plans and Map (if any) and appropriate measures incorporated into the design.

5.600 Grading and Earthwork

5.6011 Grading Plans

Grading plans shall show existing and proposed contours (@ 0.5 foot maximum intervals) including sufficient information on adjacent property and improvements to review the adequacy of the design. A summary of earthwork calculations shall be provided upon request

The design shall comply with the appropriate street cross section, vertical alignment, minimum top of curb grade and driveway slope standards described in §1.300 and §1.410. As required by the Community Development Department, on-site low points (drop inlet catch basins) shall be a minimum of 6 inches above the calculated hydraulic grade line or the design maximum water surface of the Master Plan Storm Drainage Basin to which the project is tributary, whichever is higher (See §3.703 for these elevations)

Concrete, concrete block or other approved permanent retaining walls/curbs shall be provided where the difference in grade at the property line exceeds 6 inches. At a minimum, cut and fill requirements of the Uniform Building Code, Chapter 70 shall apply.

5.602 Dust Control

Dust control measures shall be addressed on the plans. The owner/developer is responsible for dust control throughout the project. While specific, detailed requirements have not been developed as part of these Standards, the San Joaquin County Air Pollution Control District (APCD) is in the process of developing dust control regulations which may apply to public and private improvement projects and may be implemented without formal change? * Standards.

5.603 Erosion Control

Erosion control measures shall be addressed on the plans. The owner/developer is responsible for erosion control throughout the project. Existing streets adjacent to the project shall be kept clean Measures such as construction vehicle access control, temporary berms/sandbags, material stockpile locations, sweeping schedules or other measures shall be shown on the plans. Specific performance requirements have not been developed as part of these Standards, however the Environmental Protection Agency (EPA) and the APCD are developing regulations which may apply to public and private improvement projects and may be implemented without formal changes to these Design Standards.

Dirt and construction debris shall be kept out of existing utility lines by plugging new connections until the new lines are cleaned. Appropriate notes and details shall be shown on the plans.

5.700 Trench and Pipe Strength Design

5.701 General

The design engineer shall coordinate the design of the trench and pipe strength with the soils investigation and the type of pipe materials proposed for the project. The design engineer may limit the number of materials for the project. Options for pipe materials and/or embedment materials may be provided, however, the plans shall clearly require the Contractor to make timely submittals on proposed materials and installation methods.

The Standard Plans for pipe material/class and embedment conditions may be referenced on the improvement plans when appropriate based on the soils report, depth of burial and other conditions. However, these Plans are very conservative in their assumptions; the design engineer may wish to submit calculations supporting less restrictive designs. (Most of the references cites show designs with significantly lower compaction requirements. These are not appropriate in streets or other areas where settlement is detrimental.) Supplementary details shall be provided on the plans as needed.

These Standards do not address construction equipment loads or compaction effort that may damage the pipe. The design engineer should review the soils report carefully for presence of material that will be difficult to compact and should consider specifying imported material in such cases. For shallow installations, specifying installation of pipe after street compaction is obtained should be considered.

The Standard Plans referenced below include the following assumptions:

- no control on maximum trench width (ie embankment soil load conditions);
- backfill weight = 130 **lb/ft^3**
- **H-20** traffic loading;
- impact load factor per the following table:

Impact Load Factor

Pice Dia (is.)	Death of Cover (ft.) 2	JL	4	5
1	1.3	1.0	1.0	1.
2	1.3	1.0	1.0	1.
3	1.3	1.0	1.0	1.
4	1.3	1.15	1.0	1.
5	13	1.2	1.1	1.

The primary references for trench design, in addition to the cited Standards, are "Gravity Sanitary Sewer Design and Construction" and "Buried Pipe Design".

5.702 Soils Investigation

Prior to design, trench conditions shall be investigated by borings, soundings, or test pits along the route of the trench. This soils investigation will include, but will not be limited to, testing to determine the unconfined compressive strength (ASTM D-2573) or penetration resistance (ASTM D-1586) of the trench soils. Results shall indicate whether trench conditions are stable or unstable. A stable trench is a trench that stands without caving or sloughing and has an unconfined compressive strength (ASTM D-2573) greater than 500 pounds per square foot or a penetration resistance (ASTM D-1586) greater than 8 blows per foot. All other soils shall be considered unstable.

Soils in the pipe zone shall be classified per the Unified Soil Classification System (ASTM D2487) and per the applicable embedment material classifications described in the appropriate ASTM standard for the pipe materials proposed for use in the project.

Where crushed rock pipe embedment is to be used, native soil gradation curves and a filter design shall be prepared (or filter fabric specified).

5.703 Flexible Pipe

Flexible pipe includes plastic, ductile iron and other pipe materials which will deflect at least 2% without structural distress. The design initial deflection limit for flexible pipe is 5% except as noted otherwise. The installation design incorporates superimposed load, soil prism load, soil stiffness in the pipe zone and pipe stiffness.

Flexible pipe trench sections per Standard Plan 501A are applicable for:

- 4" (thickness class 51) and 6" thru 14" (thickness class 50) ductile iron pipe;
- 4" thru 15" PVC ASTM 3034, SDR 35 pipe; and,
- 4" thru 14" AWWA C900, Class 150 PVC pipe

without special design. Based on the soils report, the design engineer shall design the pipe trench section and provide details on the plans or appropriate references to the Standard Plan.

5.703.1 Ductile Iron Pipe

Trench and pipe class design for ductile iron gravity sewer pipe shall be per ASTM A746 and City Standards. Trench and pipe class design for ductile iron pressure pipe for water and force mains shall be per AWWA G I50 and C151. Deflection for cement lined pipe shall be limited to 3%. Additional design information is contained in the Cast Iron Pipe Research Association Handbook, manufacturer's literature and other references cited in the Appendix.

5.703.2 Polyvinyl Chloride (PVC, ASTM D3034)

Trench design for PVC (SDR 35) pipe shall be per ASTM D2321 and City Standards. Additional design information is contained in the Uni-Bell Handbook of PVC Pipe, manufacturer's literature and other references cited in the Appendix.

Where the depth of cover is less than 3 feet, a special design is necessary to account for pipe flexibility and possible pavement damage

5.703.3 Polyvinyl Chloride (PVC, AWWA C900)

Trench design for PVC C900 pipe shall be per AWWA C900 and Manual M23 and City Standards. Additional design information is rcr*
literature and other references^ ..... ~

5.704 Rigid Pipe

Rigid pipe includes asbestos-cement, concrete, clay and other pipe materials in which deflection is not considered. The installation design incorporates superimposed load, pipe strength (usually three-edge bearing strength) and bedding factors. A safety factor of 1 5 is required on ultimate or crush load rated pipe; a factor of 1 0 is acceptable on 0.01 inch crack load pipe.

Special designs are required for rigid pipe with less than 3 ft. of cover. Appropriate materials and construction methods, such as special embedment, concrete encasement or requiring pipe installation after street compaction, shall be shown on the plans.

Rigid pipe trench sections per Standard Plan 501B & C are applicable for:

- 4" thru 14" AWWA C400 Class 150 asbestos cement pipe;
- 12" thru *30"* ASTM C12 & C76 concrete pipe; and,
- 4" thru 30" ASTM C700 extra strength vitrified clay pipe

pipe without special design Based on the soils report, the design engineer shall design the pipe trench section and provide details on the plans or appropriate references to the Standard Plan.

5.704.1 Asbestos Cement Pipe (AWWA C400)

Trench and pipe class design for asbestos cement water pipe shall be per AWWA C401 and City Standards. Additional design information is contained in the manufacturer's literature and other references cited in the Appendix.

5.704.2 Concrete Pipe (ASTM C14, C76)

Trench and pipe class design for concrete pipe shall be per the pipe material ASTM specification, ASTM C12 and City Standards. Additional design information is contained in Concrete Pipe Handbook and Design Manual, manufacturer's literature and other references cited in the Appendix.

5.704.3 Vitrified Clay Pipe (ASTM C700)

Trench design for extra strength vitrified clay pipe shall be per ASTM C12, C700 and City Standards. Additional design information is contained in the Clay Pipe Engineering Manual, manufacturer's literature and other references cited in the Appendix.

Refer to City Construction Specification §6-19 04 "Excavation Safety" for additional requirements.

9. ALL TESTING for leakage or overdef lection shall be witnessed by a City inspector.
10. BALLING AND CLEANING of storm drain and sanitary sewers shall be done before interior video inspection. Utilities shall be kept clean until City acceptance.
11. STREET LIGHT SYSTEM shown on these plans is for reference only. The system shall be installed according to City Electric Utility Department plans.
12. BENCH MARK MONUMENTS furnished by the City shall be installed at locations shown or as directed by the City Engineer.

CONSTRUCTION NOTES (examples)

1. TV LOGS OF EXISTING MAINS will be prepared by the City of Lodi upon request of the Contractor prior to construction. Replacement of any underground mains damaged during construction of this project will be the responsibility of the Contractor.
2. R-VALUE TESTS shall be taken after grading to verify adequacy of structural section Sections shown are based on the R-values shown on the plans and are for bidding purposes only
3. A pre-construction conference will be held for this project The Contractor's job superintendent (and major subcontractor, if any - identify) shall attend
4. A project identification sign shall be installed at (describe location or show on plans) as shown below. The sign shall have (describe color, lettering - 2" high minimum - and material)

Rolling Glen Subdivision

brought to you by:

Lodi New Age Development
phone 333-3333

being built by:

Lodi Constructors International
phone 333-4444

project design by:

Lodi Engineering
phone 333-5555

A-1.3 Checklist

Normal plan drafting and miscellaneous requirements are listed below. The list is to be checked off by the design engineer and submitted with the initial submittal of the plans, except items noted * may be added after the first check, Incomplete plans will be returned without processing. Note that incomplete topography makes it impossible to adequately design and review improvement plans. City staff field review each project as part of the review process. Plans not showing existing improvements affecting the design will be returned.

This checklist is **not** a repeat or a listing of City Standards. The design engineer is still responsible for complying with these Standards in the design and preparation of improvement plans.

Appendix A

-1 Improvement Plan Requirements

A-1.1 General Requirements

After approval of the preliminary design, the design shall be incorporated into public improvement plans for the project, In general, the plans shall contain the following:

- Key/Title Sheet;
- Grading Plan;
- Civil Plans;
- Traffic Control and/or Striping Plans;
- Structural, mechanical, and electrical drawings for appropriate facilities;
- Specifications for materials and construction procedures for the portions of the project not already covered in the City Standard Construction specifications;
- Applicable soils investigation data;
- Required submittal list

Sheets may be combined or omitted depending on the size and complexity of the project

Itemized quantity listings (bid items) are not required to be sbown on the plans (See §A - 2 regarding bid items)

A-11.2 Plan Motes

The following general notes shall be included in all construction plans, modified as indicated for the particular project. Additional instructions or conditions related to contractual or other agreements between or among the owner/developer, design engineer and contractor shall be listed separately under a section titled "Special Conditions". Notes relating to specific portions of the work or special requirements shall be clearly keyed to the plan and grouped on each sheet under the heading "Construction Notes". Some typical construction notes are also shown below.

fiFNIFRAI NOTFfi

1. WORK SHALL CONFORM to City of Lodi Public Improvement Design Standards, Construction Specifications ana Standard Plans unless specifically shown otherwise on these plans.
2. STANDARD PLANS applicable to this project include:
   (list the following and any others that apply) 101, xxx
3. CONSTRUCTION STAKING for curb & gutter, wastewater lines, storm drains, water lines, street centerlines, paving edges and other public facilities as directed by the City shall be done by a Registered Civil Engineer or Licensed Land Surveyor.
4. CENTERLINE AND PROPERTY LINE DATA shall be obtained from (list City file number of final map, parcel map or record of survey as applicable).
5. EXISTING UTILITIES shall be protected. Utility agencies shall be notified and allowed to mark their utilities in the field at least 48 hours before excavation.

   < < < < CALL "USA" (800) 642-2444 > > > >

6. STREET AND LOT ROUGH GRADING shall be done before underground work.
7. UNDERGROUND UTILITIES in the street and sidewalk area shall be installed before construction of curb, gutter or sidewalk. These utilities include services, fire hydrant laterals, street light conduit, electric, gas, cable TV and telephone lines.
8. EXCAVATION SAFETY REQUIREMENTS include submitting a CAL OSHA permit or letter of notification to the City before commencing excavations over five feet deep.

Improvement Plan Checklist

- ☐ Sheet size and City of Lodi title block conforming to Standard Plan 604
- ☐ * RCE signature, stamp and expiration date
- ☐ North arrow (to top or right as appropriate)
- ☐ Scale (1" = 20', 1" = 40' or as needed for details and sections)
- ☐ Abbreviations and symbols conforming to Standard Plan 502 & 503
- ☐ Existing topography (including signs and striping) in project work area, field checked and accurately shown including the side of the street opposite the work *to* the curb (or right-of-way if no curb)
- D Reference plan drawing numbers shown (ie. "Ref. 88D124" for improvements from another project
- ☐ * Reference to adjacent sheet drawing numbers in the project set (ie. "See 91D090")
- ☐ Detail drawings as appropriate, particularly if conditions do not fit Standard Plans
- ☐ Repeated information consistent between sheets
- ☐ Grades shown consistently in percent or decimal form
- ☐ * "USA Call Before You Dig" sticker (City will furnish)
- ☐ "Construct", "install", "existing" and "future" items consistently noted
- ☐ * The phrase "work by others" is not to be used The appropriate party should be identified and the limits of such work clearly shown
- ☐ Distinction between public and private improvements clearly noted.

Key/Title Sheet

- ☐ General Notes per §A -1.2
- D Vicinity Map:
  - site location with major streets noted
  - north arrow
- ☐ Key Map (1"=100') with:
  - project boundary, street R/W & names
  - lot lines and lot numbers
  - * sheet drawing # references and limits
  - north arrow & scale
  - reference bench mark and *ones *to* be installed
  - underground mains and above ground utilities
  - main size and direction-of-flow between manhole
  - gutter direction-of-flow arrows and high point marker
  - street light locations
  - boundary fencing location & type
- ☐ Typical Cross Sections (drawn looking up-station)
  - street sections or table w/street name and stationing limits
  - pavement structural section including compaction
  - street names noted
  - back-of-walk to R/W treatment shown t
  - trench sections or table reference to Standard Plan 501
- ☐ Miscellaneous
  - table of street segment, design R-value and traffic index
  - submittal listing
  - "Special Conditions" notes
  - dust control provisions
  - "salvage items identified

- ☐ Existing and design grades or contours including adjacent property
- ☐ Locations of borings, R-value or other tests
- D Applicable soils report information
- ☐ Septic tank & leach field location and abandonment information
- ☐ Well location and abandonment information
- ☐ Irrigation risers & standpipes, size & direction on pipes; removal notes
- ☐ Retaining wall or other grade control details
- ☐ Erosion control details

  * Put appropriate information on key or civil sheets if r.u ^

Civil - Strppt Plans

- ☐ City/County/State R/W boundaries as applicable
- ☐ Name of Street or Easement shown
- ☐ Names of intersecting streets and adjacent drawing #'s shown
- ☐ R/W lines identified
- ☐ Property lines & lot numbers
- ☐ Street dimensioned at end of sheet and at transitions
- ☐ Public utility & sight easements dimensioned
- ☐ Private & public utilities shown
- ☐ Existing utility crossings shown (gas, telephone, electrical)
- ☐ Transition pavement with flares at boundary limits
- ☐ Street signs at intersections
- ☐ Centerline survey monuments
- ☐ Horizontal curve data
- ☐ Existing poles, signs and structures; any required relocation noted
- ☐ Stationing shown west to east, south to north, left to right and bottom to top; no negative stationing
- ☐ Basis of stationing from City reference noted
- ☐ Equations at stationing crossings provided
- ☐ Street name at street intersections referenced
- ☐ Match lines shown, preferably at even stations
- D Stationing corresponds with subdivision map data
- D Offsets shown perpendicular to base of stationing
- ☐ * Streetlights, conduit and transformers per Electric Utility Dept, plans
- ☐ Curb, gutter & sidewalk:
  - o Standard Plan number for curb and gutter noted
  - o gutter direction-of-flow, high points & low points shown
  - o vertical to rolled 4 foot curb & gutter transition shown
  - o pavement strip removal and replacement at toe of gutter dimensioned and noted
  - o utility pole clearance dimensioned
  - ° handicap ramps »
  - ° asphalt ramps for sidewalk transitions where no sidewalk exists
  - o gutter pan detail shown if last asphalt concrete lift is postponed
  - o commercial, special & common driveways noted

Civil - Street Profile

- D Original ground grades shown
- Q Top of curb grades shown (flowline for curb & gutter replacements)
- ☐ Edge of pavement, street centerline and R/W grades shown if matching existing pavement
- ☐ Top of curb profile line
- ☐ Symbols at grade break & beginning and end of curves shown per Standard Plan 503
- ☐ Elevations shown at grade break, beginning & end of curve return, and point of intersection
- ☐ Vertical curve data

Unrierflrotinri Utilities Plan (General)

- ☐ Horizontal alignment of main dimensioned
- ☐ Main size and direction-of-flow between manholes shown
- ☐ Radius and stationing at main noted if not concentric with street centerline
- ☐ Services shown:
  - at corner lots and along curved right-of-way, services shall be shown and dimensioned to nearest lot line
  - for 1" water and 4" wastewater at standard location, services may shown with an abbreviated notation
  - larger services shall be shown and dimensioned to nearest lot line
- ☐ *Pipe markers installed at dead-ends or in fields
- ☐ Manholes are concentric or noted if eccentric (show orientation)

Unriernroiinri Utilities Profile- General

- ☐ Main:
  - length and size between manholes noted (length computed between inside edge of structure walls)
  - direction-of-flow arrows with slope shown and invert elevations noted
- ☐ Station, length, invert @ property line and size of laterals larger than minimum noted
- ☐ Pipe invert elevations shown at manholes, grade breaks, catch basins and ends of lines
- ☐ Existing utilities shown or approximated with note "verify depth and/or location in field before start of construction
- ☐ Crossings and horizontal alignment in accordance with City of Lodi Specifications and California State Health Standards noted
- ☐ Size, length and elevation of stubs noted
- ☐ Manholes:
  - station
  - size and type noted if other than standard diameter barrel
  - top of manhole elevation noted
  - "adjust *to* grade" for existing structures noted

Wastewater - Miscellaneous

- ☐ * Monitoring structures shown where required
- ☐ * Sand/grease traps shown where required

Storm Drain - Miscellaneous

- ☐ Drainage flow transition from project boundaries to existing flowline shown
- ☐ Grade break (if unavoidable) in lateral noted with distance to manhole noted
- ☐ * Sand/oil trap provided for on-site drainage per City requirements
- ☐ Catch basins installed at lot lines and 18" from curb returns

Wafpr - Misnpllanpnns

- ti Blind flanges with stubs at cross and tee for future extensions noted
- ti Valve on main provided no closer than 15 feet from temporary blow-off
- ☐ No services between last valve and temporary blow-off
- ☐ No services within 15 feet of permanent dead-end blow-off
- ☐ Fire Hydrants:
  - 0 hydrants located per Fire Dept fire hydrant plan & Standard Plan No 401 guidelines
  - o fire hydrant assembly or components itemization consistently shown
  - o lateral and valve oriented perpendicular to or parallel to face of curb
  - 0 elevations at top-of-curb or back-of-walk provided
  - 0 guard posts shown, if required

A - 2 Bid Item List

The following list is provided as a general guide for consistency in City projects and improvement: security estimates Items used for each project will vary, but the order and units shall be followed, "incl." means payment for the item may be included in another item of work. The order is based on the order of the Caltrans Standard Specifications with some minor exceptions. The final listing shall be numbered.

Item	Units
Dust Control	LS or Hour
Traffic Control	LS
Removal of...(list as needed)	LS, EA or incl
Abandon ... (well, septic system, or other; list as needed)	LS or EA
Salvage.. (list as needed)	EA
Clearing and Grubbing	LS
Rough Grading	CY
Roadway Excavation	CY
Excavation Safety	LS
Compact Original Ground (Roadway)	SF
Concrete Subgrade Compaction	SF
Imported Borrow	CY or TON
Irrigation System (system or itemize pipe,* valves*, etc)	LS, LF, or EA
Landscaping (list turf or type as appropriate)	LS or SF
Trees (list by type, size")	EA
Clean-up or Finishing Roadway	LS or incl.
Aggregate Base (AB), Class 2	TON or SF **
Liquid Penetration Treatment	TON
Pavement Reinforcing Fabric	SY
Asphalt Concrete (AC) (list by aggregate size*, may separate type, i.e. overlay, transition, etc.)	TON or SF **
Asphalt Concrete Leveling Course	TON
Pavement Repair	SF
Pavement Grinding (list by depth, width or type per plan table)	LF or SF
Steel Structures (list as appropriate)	EA or LS
Painting (list as appropriate)	EA or LS
Storm Drain Pipe (list *)	LF
Storm Drain Manhole/Riser (list *)	EA
Sand/Oil Trap	EA
Adjust Existing SD Manhole to Grade	EA
Furnish S D Frame & Cover	EA
Wastewater Pipe (list *)	LF
Wastewater Service (list *)	EA
Wastewater Cleanout (in not included in service price)	EA
Wastewater Manhole/Riser (list *)	EA
Wastewater Trap (list *)	EA
Adjust Existing WW Manhole to Grade	EA
Furnish WW Frame & Cover	EA
Curb & Gutter (& Sidewalk) (differentiate type, width as appropriate)	LF
Sidewalk	SF
Commercial Driveway	LF or SF
Special Driveway	LF or SF
Alley Approach	SF
Tree Well	EA
Sign Post (list by height," type)	EA
Mowstrip (or other misc. concrete items)	LF

Side Inlet Catch Basin	EA
Drop Inlet Catch Basin	EA
Survey Monument (list")	EA
Adjust Existing Monument Frame to Grade	EA
Furnish Survey Monument Frame and Cover	EA
Water Main (list *)	LF
Water Valve (list *)	EA
Water Service (list *)	EA
Backflow Assembly (list *)	EA
Fire Hydrant (specify either assembly wlvalve & lateral or by individual components)	EA
Permanent Blow-Off	EA
Temporary Blow-Off (list *)	EA
Temporary Connection (with/without meter)	EA
Adjust Existing Water Valve Frame to Grade	EA
Furnish Water Valve Frame & Cover	EA
Fence (list *)	LF
Dead-end Barricade (Fence type)	LF
Traffic Striping (list *)	LF
Traffic Legend/Marking (list *)	EA
Pavement Marker (list *)	EA
Street Light (list*)	EA
Traffic Signal and Lighting System	LS
Signs (list *)	EA

* indicate size and class/strength/type as appropriate, largest diameter or size first.

** AB and AC quantities are normally in TONS but may be in SF for minor work and subdivision improvement contracts.

ITY OF LODI

UBLIC WORKS DEPARTMENT

PROJECT

P_roject Name

(Limits of Project, etc.)

BBB

SHEET NO.

CHECKED BY

DATE

JOB NUMBER 91X009

WASTEWATE FLOW CALCULATIO

d Use).	Area Acres	Average Cf6 per Acre	Flows Total cfs	Cumu Resid. Non'R. cfs	lative Resid Pop. pers	Peak Facto	Peak Flow cfs	Total Flow cfs	Dia in.	Pipe Slope ft./ft.	Len. ft.	Full Cap. cfs	Pipe Vel. fps	Peak Depth d/D	Flow Vel. fps	Invert Elev. up/dn ft.	Top of Curb Elev. ft.	Remarks
R-1	10.0	0.00186	6.02	0.02	120	"473	0.08											
C-2	10.0	0.00387	0.04	0.04		3.0	0.12	0.20	8"	0.0033	500	0.70	2.0	0.38	1.7	32.15	36.50	
R-HD	5.0	0.01238	0.06		640	470	-6740	0.51								30.50	36.25	
R-1	10.6	0.00186	0.02	0710 "6.64		376	0.12		10"	0.0025	500	1.10	2.0	0.47	1.9	30.33		
																29.08		

WW CALC

CITY OF LODI

PUBLIC WORKS DEPARTMENT

PROJECT _Eroject Name_____
(Limits of Project etc..)

BY BBB

SHEET NO.

CHECKED BY

DATE

JOB NUMBER 9 1X009

STORM DRAINAGI CALCULATIC

Use, Node	Area Acres	C Facto	AC	Sum of AC	T.C. min.	I "/hr.	Q cfs	Dia in.	HGL Slope ft./ft.	Pipe Slope ft./ft.	Length ft.	Vel. fps	Flow Time min.	HGL fall ft.	Invert Elev. up/dn ft.	HGL Elev. ft.	Top of Curb Elev. ft.	Remarks
-1	10.0 10.0	0.40 0780	4.0 8.0	~T2ir	12	1.15	13.8	24	0.00371	0.00075	700	4.4	Z.I	2.60	29.00	33.60	35.00	Initial T.C. = 10 m gutter/1.5 fp6/60 s
R-HD -1	5.0 5.0 20.0	0.50 0.40 0.42	2.5 2.0 8.4	-249	15	1.02	25.3	36	0.00143	0.00044	700	3.6	3.3	1.00	28.48 27,48	31.00	36.50	(Note: Need to ve above top of pipe (partial depth flow (
															27.17	30.00		provided.)

of Lodi Design Standards §3.000

SD C/

A - 5 References

Advances in Pipeline Materials. Jey K. Jeyapaian, Civil Engineering, July 1990 (This recent article raises some interesting points about the state of design practice in the United States, including soil stiffness discrepancies)

A Guide for the Installation of Ductile Iron Pipe. Ductile Iron Pipe Research Association, 1978

American Society for Testing and Materials. (ASTM), various standards as cited, latest revision unless otherwise specified by the City Engineer; a list of cited standards is available from the City Engineer

American Water Works Association. (AWWA), various standards and manuals as cited, latest revision unless otherwise specified by the City Engineer; a list of cited standards is available from the City Engineer

A Policy on Geometric Design of Highways and Streets. American Association of State Highway and Transportation Officials (AASHTO), 1984

Buried Pipe Design. A P Moser, Mc-Graw Hill, 1990 (This is an up-to-date reference that summarizes many of cited references and contains design examples.)

Citywide Circulation Study. TJKM Transportation Consultants, Final Report July 20,1990

Clay Pipe Engineering Manual. National Clay Pipe Institute, July 1982

Concrete Pipe Design Manual. American Concrete Pipe Association, 5th printing (revised) June 1980

Concrete Pipe Handbook. American Concrete Pipe Association, January 1980

Design and Construction of Sanitary and Storm Sewers. American Society of Civil Engineers Manual and Report on Engineering Practice - No. 37, Water Pollution Control Federation Manual of Practice - No 9,1969 (second printing, 1976) (Note, while the portions of this manual covering gravity pipe design are largely superceded by ASCE Manual No, 60, this manual contains applicable information on pumping facilities)

Design and Performance of PVC Pipes Subjected to External Soil Pressure. Moser, Watkins & Shupe, Buried Structure Laboratory, Utah State University, February 1977 (This research paper contains much of the background material used in later references)

Design of Urban Streets. Federal Highway Administration (FHWA), Report #80-204, as updated and republished by the California Institute of Transportation Studies and used in their University of California extension course of the same name

Draft General Plan. Jones & Stokes, various documents and dates including the Draft Environmental Impact Report, April 1990 and the Draft Policy Document

Ductile Iron Pipe and Cast Iron Pipe Handbook. Cast Iron Pipe Research Association, 4th Edition, 1976 (While this handbook contains some text on history and design considerations, it mainly consists of American National Standards Institute (ANSI) standards which may be superceded by other standards These ANSI standards are usually conumbered as a corresponding AWWA standard.)

Flexible Pavement Structural Section Design Guide for California Cities and Counties. League of California Cities, 1973 (Includes information and examples on calculation of traffic index from truck wheel load data)

Gravity Sanitary Sewer Desian and Construction. American Society of Civil Engineers Manual and Report on Engineering Practice - No. 60, Water Pollution Control Federation Manual of Practice - No. FD-5,1982

Guidelines for Driveway Design & Location. Institute of Transportation Engineers (ITE), Proposed Recommended Practice, ITE Technical Committee 5B-13,1985

Handbook of PVC Pipe Design and Construction. Uni-Bell PVC Pipe Association, 2nd Edition March 1982

Highway Capacity Manual. Transportation Research Board, 1985

Highway Design Manual. California Department of Transportation (Caltrans), 4th edition & per latest updates issued by Caltrans

Introductory Soil Mechanics and Foundations. Sowers & Sowers, Macmillan, 3rd edition, 1971

Residential Streets. American Society of Civil Engineers, National Association of Home Builders and Urban Land Institute; 2nd Edition 1990 (While this reference contains useful general information on design, the various minimum design standards, particularly those for street width, are considered inappropriate for Lodi)

Review of (Draft) Sanitary Sewer Design Standards. Ron Heinzen, (Kleinfelder), correspondence January 21, 1988

Sanitary Sewer System Technical Report for the 1990 General Plan Update. Black & Veatch, 1990 Traffic

Manual. California Department of Transportation (Caltrans), per latest updates issued by Caltrans

Transportation and Traffic Engineering Handbook. Institute of Transportation Engineers, 2nd edition, 1982

Trip Generation. Institute of Transportation Engineers, 4th edition, 1987

Water Master Plan. Psomas & Associates, 1990

Work Area Traffic Control Handbook (WATCH Manual), BNi Books, 7th edition, 1990

CITY OF LODI

PUBLIC WORKS DEPARTMENT

BY	SHEET NO. OF
CHECKED BY DATE	JOB NUIVBER

WASTEWATER FLOW CALCULATIONS

Land Use, Zoning Location, Node I.D.	Area Acres	Average cfs per Acre	Flows Total cfs	Cumu Resid. Nor. R. cfs	lative Resid Pop. pers	Peak Facto	Peak Flow cfs	Total Flow cfs	Dia in.	Pipe Slope ft./ft.	Pipe Len. ft.	Full Cap. cfs	Pipe Vel. fps	Peak Depth d/D	Flow Vel. fps	Invert Elev. up/dn ft.	Top of Curb Elev. ft.	Remarks

Reference: City of Lodi-Design-Standards-000—

WW_CALCS.XLS

J

CITY OF LODI

CONSTRUCTION SPECIFICATIONS

SECTION 6 SPECIAL PROVISIONS
Index

*6-01 DESCRIPTION OF WORK

*6-02 QUANTITIES

*6-03 MATERIALS

* Not included in public copies of these Specifications

" in margin indicates revision

*6-04 SCHEDULING PROJECT WORK 6-
04.01 Scheduling Work
6-04.02 Contractor's Cooperation with Other Work 6-04.03 Beginning of Work, Time of Completion and Liquidated Damages

*6-05 CONSTRUCTION RIGHT-OF-WAY/PERMITS
6-05.01 Right-of-way 6-05.02
Special Permits 6-05.03
Building Permits

6-06 SPECIFICATIONS 6-06.01 General 6-06.02
Work for Developers and Others

6-10 DUST CONTROL
6-10.01 Dust Control and Watering

6-12 TRAFFIC CONTROL
6-12.01 Traffic Control

6-15 EXISTING FACILITIES
6-15.01 Protection of Existing Facilities
6-15.02 Removal Methods
6-15.03 Abandon Facilities
6-15.04 Adjusting Facilities to Grade
6-15.05 Salvaged Materials

6-16 CLEARING AND GRUBBING

6-19 EARTHWORK
6-19.01 Roadway Excavation
6-19.02 Pipe and Structure Excavation and Backfill
6-19.03 Slurry Cement Backfill
6-19.04 Excavation Safety
6-19.05 Compaction
6-19.06 Imported Borrow

6-20 SPRINKLERS AND LANDSCAPING
6-20.01 Sprinkler Systems - General
6-20.02 Sprinkler System Materials
6-20.03 Sprinkler System Installation
6-20.04 Turf - General
6-20.05 Turf - Sod
6-20.06 Turf - Seeded
6-20.07 Planting - General
6-20.08 Planting Materials
6-20.09 Planting Operations

6-22 CLEAN-UP

6-26 AGGREGATE BASE

6-36 PENETRATION TREATMENT
6-36.01 Liquid Asphalt Penetration Treatment

6-39 ASPHALT CONCRETE
6-39.01 General
6-39.02 Pavement Reinforcing Fabric
6-39.03 Street Paving
6-39.04 Trench Replacement and Shoulder Paving
6-39.05 Asphalt Concrete Leveling Course
6-39.06 Pavement Repair

6-42 PAVEMENT GRINDING

6-55 STEEL STRUCTURES
6-55.01 General
*6-55.02 Picnic Shelter Structural Steel, Metal Decking, Fasteners and Roof

6-59 PAINTING
6-59.01 General *6-59.02
Painting Details

6-62 STORM DRAINS

6-62.01 General

6-63 CAST-IN-PLACE CONCRETE PIPE 6-64

ASBESTOS CEMENT STORM DRAIN PIPE

6-65 PRECAST CONCRETE PIPE
6-65.01 General 6-
65.02 Jacked Pipe

6-66 CORRUGATED METAL PIPE

6-70 MANHOLES AND MISCELLANEOUS FACILITIES
6-70.01 Manholes

6-71 SANITARY SEWERS 6-71.01 General 6-71.02
Leakage Tests 6-71.03 Vitrified Clay
Pipe (VCP) 6-71.04 Polyvinyl Chloride
Pipe (PVC)

6-72 SLOPE PROTECTION
6-72.01 Rock Slope Protection

6-73 CURBS, SIDEWALKS AND MISCELLANEOUS CONCRETE
6-73.01 General

6-76 DOMESTIC WATER FACILITIES
6-76.01 General 6-76.02
Materials 6-76.03
Installation 6-76.04
Testing

6-80 FENCES
6-80.01 General
6-80.02 Chain Link Fence

6-84 TRAFFIC STRIPES 6-

85 PAVEMENT MARKERS

"6-86 SIGNALS AND LIGHTING
6-86.01 General
6-86.02 Contract Submittals
6-86.03 Maintaining Existing Systems
6-86.04 Installation
6-86.05 Foundations
6-86.06 Standards, Steel Pedestals and Posts
6-86.07 Conduit
6-86:08 Pull Boxes
6-86.09 Conductors and Wiring
6-86.10 Bonding and Grounding
6-86.11 Service
6-86.12 Testing
6-86.13 Galvanizing and Painting
6-86.14 Solid-state Traffic Actuated Controller
6-86.15 Emergency Vehic1e Pre-Emption
6-86.16 Vehicle Signals
6-86.17 Pedestrian Signals
6-86.18 Detector
6-86.19 Pedestrian Push Button
6-86.20 Luminaires
6-86.21 Signs
6-86.22 Traffic Signal Payment

"6-110 TENNIS COURT RESURFACING

6-141 WATER WELL ABANDONMENT
6-141.01 Permits, Certificates, Laws and Ordinances
6-141.02 Specific Well Details
6-141.03 Abandonment of Wells
6-141.04 Additional Site Work
6-141.05 Concrete
6-141.06 Cement Grout

Revised September 1989

REFERENCES TO THE "STANDARD SPECIFICATIONS" REFER TO THIS PUBLICATION:

STANDARD PLANS

STATE OF CALIFORNIA BUSINESS,
TRANSPORTATION AND HOUSING AGENCY
DEPARTMENT OF TRANSPORTATION

JULY, 1992

change out

ISSUED BY

DEPARTMENT OF TRANSPORTATION

Current price for additional copies of this
book may be obtaind by writing

STATE OF CALIFORNIA DEPARTMENT OF
TRANSPORTATION GENERAL PUBLICATION
DISTRIBUTION UNIT
1900 ROYAL OAKS DRIVE
SACRAMENTO, CALIFORNIA 95819
Telephone (916)445-3520

6-06 SPECIFICATIONS 6-

06.01 General

Section 6-10 through 6-95 of these Specifications (Special Provisions) correspond with the State of California Department of Transportation Standard Specifications. Not all the Sections are used. Therefore, there are gaps in the numbering sequence. Sections used contain either:

- o Changes from the Standard Specifications o Additions to the Standard Specifications
- o Repetition of the Standard Specifications for clarity and/or emphasis

Revised April 1986

6-06.02 Work for Developers and Others

a) These Specifications shall govern work done within the Right-of-way and Public Utility Easements under the following circumstances:

- o Work done for subdividers and developers under the terms of a development agreement or encroachment permit;
- o Vlork done by public utilities or their contractors, however nothing in these Specifications shall be construed so as to conflict with or reduce requirements of the State of California General Orders governing such utility work.
- o Work done by private parties or others.
- o Work done for the City of Lodi not done under formal contract.

b) All work shall be in accordance with applicable portions of the Standard Specifications. Attention is directed to the following Sections:

Section 1 "Definitions and Terms"
Section 4 "Scope of Work"
Section 5 "Control of Work"
Section 6 "Control of Materials"
Section 7 "Legal Relations and Responsibilities

c) Definitions and Terms shall be as described in Section 1 "Definitions and Terms" of the Standard Specifications and the following:

Engineer - The City Engineer of the City of Lodi, California or his authorized representatives.

Contractor, Developer or Subdivider - As used in these specifications, the Contractor, Developer or Subdivider shall mean that person, firm, corporation, partnership, company, agency or association who causes land to be divided into a subdivision in accordance with the City of Lodi Subdivision Ordinance and who has entered into or executed a contract and/or agreement with the City of Lodi, providing for the completion of all improvements in connection with a subdivision duly filed with, and approved by the City Council of the City of Lodi, or who has been granted a valid encroachment permit to do work within public rights of way or public utility easements.

Construction Specifications - Where reference is made to Construction Specification it shall mean this set of specifications.

Standard Specifications - In these Specifications, or on the plans, where reference is made to Standard Speicfications or to the Standard Specifications, State of California, it shall mean the STANDARD SPECIFICATIONS, State of California, Department of Transportation, latest edition.

Whenever in the Standard Specifications the following terms are used, they shall be understood to mean and refer to the following:

Department - Public Works Department of the City of Lodi.

City - The City of Lodi, California.

Director of Public Works - Public Works Director and City Engineer of the City of Lodi.

Engineer - The City Engineer of the City of Lodi, California or his authorized representatives.

Contractor, Developer or Subdivider - As defined above.

Laboratory - The designated materials laboratory authorized by the City Engineer to test mterials and work,

State - The City of Lodi, California.

d) Plans and Specifications on Job Site - A complete approved set of plans and specifications shall be kept on the job site and available at all times. Nonavailability shall be deemed as cause for temporary suspension of the work.

e) Lines and Grades All distances and measurements are given and will be made in a horizontal plane unless otherwise noted.

The Contractor shall furnish all facilities and work necessary to provide location of the proposed improvements.

Three consecutive points shown on the same rate of slope must be used in common, in order to detect any variation from a straight grade. The Contractor shall be responsible for any error in the finished work.

All stakes and points set for lines, grades, or measurements of the work shall be preserved in their proper places until their removal is authorized by the Engineer.

Section 5-1.07 "Lines and Grades" of the Standard Specifications shall be deleted unless otherwise specified.

f) Inspection shall be in accordance with Section 5-1.08 "Inspection" of the Standard Specifications and these Special Provisions.

Whenever the Contractor varies the period during which work is carried on each day he shall give due notice to the Engineer, so that proper inspection may be provided. Any work done in the absence of the Engineer will be subject to rejection.

Projects financed in whole or in part with state or federal funds shall be subject to inspection at all times by representatives of the Agencies involved or their agents.

g) Responsibility for Damage and Work The City of Lodi, the City Council, the City Engineer shall not be answerable in any manner for any loss or damage that may happen to the work or any part thereof, or for any material or equipment used in performing the work; or for injury or damage to any person or persons, either workmen or the public; for damage to adjoining property from any cause whatsoever during the progress of the work or any time before acceptance of the work by the City Council.

The City of Lodi, the City Council and the City Engineer shall be indemnified and save harmless from any suits, claims, or actions brought by any person or persons for or on account of any injuries or damages sustained or arising in the construction of the work or in consequence thereof.

Except as provided above, until the formal acceptance of the work by the City Council or the City Engineer, the City of Lodi shall not have the charge and care thereof and shall not bear the risk of injury or damage to any part thereof by the action of the elements or from any other cause, whether arising from the execution or from the nonexecution of the work. All injuries or damages to any portion of the work occasioned by any of the above causes before final acceptance shall be rebuilt, restored and made good at no expense to the City of Lodi, except such injuries or damages occasioned by acts of the Federal Government or the public enemy.

h) No Personal Liability Neither the City Council, the City Engineer, nor any other officer or authorized assistant or agent shall be personally responsible for any liability arising under the Agreement.

i) Responsibility of City The City of Lodi shall not be held responsible for the care or protection of any material or parts of the work prior to final acceptance, except as expressly provided in these specifications.

j) Work Within Right-of-way of Others The Contractor shall make aTl arrangements with the appropriate agencies for all work to be performed within the agencies right-of-way and the Contractor shall conduct the work in accordance with any and all of the requirements of the agency involved.

The Contractor shall pay the cost of all fees, bonds, permits, licenses and other requirements in connection with work within the right-of-way of the other agencies.

k) Contractor's Cooperation with Other Work The Contractor's attention is directed to the fact that Pacific Gas and Electric Company, Pacific Telephone Company, Lodi Cable TV, and the City of Lodi and/or their contractors may be installing facilities within the project limits and during the construction of the work; it shall be the Contractor's responsibility to contact these agencies to ascertain their schedules of work.

It shall be the Contractor's responsibility to schedule and coordinate his work with other contractors so there is the least amount of conflict during all phases of construction. The Contractor is also responsible for making all necessary agreements with the other agencies that might be required during construction.

1) Measurement and Payment shall be in accordance with the Contract or Agreement between the appropriate parties. Measurement and payment sections in these specifications are those normally used by the City of Lodi in its Contracts and are included for reference only.

Revised April 1986

6-10 DUST CONTROL

6-10.01 Dust Control and Watering Dust control and watering shall conform to the provisions in Sections 10 "Dust Control" and 17 "Watering" of the Standard Specifications and these Special Provisions.

At the request of the Contractor, water for dust control and project construction will be furnished by the City of Lodi without cost to the Contractor. Water is available from fire hydrants within the project boundaries at the locations shown on the plans. The Contractor shall furnish and use City approved hydrant wrenches.

Necessary precautions to prevent dust nuisance shall be taken during all phases of construction, on non-working days, and to final acceptance of the work.

Payment for dust control and watering shall be considered as included in the various items of work and no additional compensation will be allowed therefor.

Revised Dec. 1985

6-12 TRAFFIC CONTROL

6-12.01 Traffic Control Traffic control shall conform to Section 12 "Construction Area Traffic Control Devices" of the Standard Specifications and these Special Provisions. Attention is particularly directed to the "MANUAL OF TRAFFIC CONTROLS FOR CONSTRUCTION AND MAINTENANCE WORK ZONES" published by Caltrans. Nothing in these Specifications is to be construed as to reduce the minimum standards set in said manual.

Traffic shall be maintained at all times as provided in these Special Provisions except as otherwise approved by the Engineer.

(Insert appropriate wording)

The Contractor will be required to keep all residents and businesses notified of the work schedule as it. affects their access.

The Contractor shall maintain contact with the City Electric Utility Department dispatch office regarding start and completion of the following:

- Construction activity that may impede emergency vehicles, school buses, etc.
- Construction activity such as trenches or other excavation that prohibit access.
- Construction activity that removes a fire hydrant from service

The Contractor shall provide the name and telephone number of a person directly responsible for the construction activity. The dispatcher will notify Lodi Police and Fire Departments, Life Medical Paramedic Ambulance Service, and Lodi Unified School District. The phone number is:

(209) 368-5735

The City will furnish "No Parking" signs which shall be posted by the Contractor.

The Contractor shall be responsible for supplying, installing and maintaining such fences, barriers, lights, signs and flaggers as are necessary to give adequate warning to the public at all times that the road or street is under construction and of any dangerous conditions to be encountered as a result thereof.

All traffic control equipment shall be removed when it is no longer required.

Upon request, the Contractor shall submit to the Engineer a sketch showing the proposed signing and barricading to be used in the project.

All existing warning, regulatory, and information signs shall be maintained in a visible location during all phases of the construction by the Contractor.

If it becomes necessary for the City of Lodi to replace or place additional barricades in order to provide adequate safety to the public, the Contractor will be charged $1.00 per barricade per day or portion thereof plus the cost of placement and removal. The Contractor will also be charged for replacement of damaged City barricades. The Contractor shall furnish and place barricades within three working days. No removal charge will be made if the Contractor returns City barricades to the Municipal Service Center.

Full compensation for furnishing all labor, materials, tools, equipment and incidentals for doing all work involved in furnishing and placing barricades, warning devices, and for flaggers as may be required by the Engineer shall be considered as included in the price paid for the various items of work, and no additional compensation will be allowed therefor.

Revised Oct. 1989

6-15 EXISTING FACILITIES

6-15.01 Protection of Existing Facilities Protection of existing facilities shall conform to all the applicable provisions in Section 8-1.10 "Utility and Non-Highway Facilities: and Section 15 "Existing Highway Facilities" of the Standard Specifications, and, these Special Provisions.

All known obstructions to the work are indicated on the plans. However, the City cannot guarantee the accuracy of this information. The Contractor will be held responsible for the maintenance and protection of or damage to existing facilities, structures, obstructions and all underground facilities shown on the plans or brought. to the Contractor's attention during the course of the work.

The Contractor shall notify owner agencies for locations of utilities or facilities prior to excavation.

The owning utility shall be immediately notified of any damage which is caused by the operations of the Contractor to any facility, utility or structure. At the owning utilities' discretion, repairs shall be made by the Contractor at the owning utilities' direction or by the utility, all to the satisfaction of the Engineer.

The Contractor's attention is called to the fact that the existing storm drain lines and sanitary sewers may be carrying miscellaneous drainage and sanitary sewage. The necessary steps shall be taken to prevent flooding of the trench, structure and/or excavations where ties and removals of the storm drain system and sanitary sewer are made.

At connections to existing facilities, approved means of preventing sand and debris from entering the existing lines shall be provided.

Payment for protection of existing facilities shall be considered as included in the price paid for the various items of work and no additional compensation will be allowed therefor except as provided in the Standard Specifications.

Revised April 1986

6-15.02 Removal Methods Removal of existing improvements shall conform to Section 15-2 "Miscellaneous Highway Facilities", these Special Provisions and as shown on the Plans.

All portions of existing concrete to be removed shall be removed in a smooth, neat, vertical plane. Where expansion, contraction or construction joints are not present, the concrete shall be saw cut to a minimum depth of 1-1/2 inches. If an expansion, contraction or construction joint is within 3 feet of the concrete to be removed, the concrete shall be removed to that joint.

Prior to final paving, all portions of existing pavement to be removed shall be cut on a neat, straight line. Pavement removed outside the removal line shall be cut parallel to and at right angles to the removal line. The face of the cut shall be smooth and shall not overhang the removal area. Drop hammers are not allowed. Jackhammers may be used if the cuts are overlapped and meet the above criteria. Where edges of remaining pavement are raised by the removal method used, they shall be flattened with a mechanical tamper prior to setting frames or replacing pavement.

Where an excavation leaves less than two feet of pavement adjacent to the gutter, the remaining pavement shall be removed and replaced.

All removed material, unless otherwise specified, shall become the property of the Contractor and shall be disposed of outside of the right-of-way in accordance with the provisions in Section 7-1.13 "Disposal of Material Outside the Highway Right of Way" of the Standard Specifications.

Payment for removal of existing improvements shall be in accordance with Section 15-2.07 "Payment" of the Standard Specifications,

Revised June 1988

6-15.03 Abandon Facilities Existing facilities shall be abandoned as shown on tn-e plans and in accordance with these Special Provisions.

Existing manholes, where shown on the plans to be abandoned, shall be abandoned, in accordance with Section 15-2.05A "Frames, Covers, Grates and Manholes" of the Standard Specifications,

Frames and covers may be retained by the Contractor.

Existing storm drains and utility pipe lines, where shown on the plans to be abandoned, shall be abandoned in place or at the option of the Contractor, shall be removed and disposed of. All resulting openings into existing structures that are to remain in place shall be plugged with commercial quality concrete.

Abandoning storm drains and pipe lines in place shall conform to the following:

Storm drains and pipe lines that intersect the side slopes shall be removed to a depth of not less than 3 feet, measured normal to the plane of the finished side slope, before being abandoned.

Storm drains and pipe lines less than 24 inches in diameter shall be removed or crushed in place, unless otherwise shown on the plans.

Storm drains and pipe lines, 24 inches in diameter and larger, shall be backfilled with sand by any method, acceptable to the Engineer, which completely fills the pipe. Sand backfill material shall be clean, free draining, and free from roots and other deleterious substances.

The ends of storm drains and pipe lines shall be securely closed by a 0.5-foot thick tight fitting plug or wall of commercial quality concrete containing not less than 470 pounds of cement per cubic yard.

Storm drains and pipe lines shall not be abandoned until their use is no longer required. The Contractor shall notify the Engineer in advance of any intended storm drain or pipe abandonment.

Existing catch basins, where shown on the plans to be abandoned, shall be abandoned. Covers and grates may be retained by the Contractor. The top portion of the catch basins shall be removed to a depth of 3 feet below finished grade.

Payment for abandoning facilities shall be in accordance with Section 15-2.07 "Payment" of the Standard Specifications.

Revised Dec. 1985

6-15.04 Adjusting Facilities to Grade Miscellaneous facilities shall be adjusted to grade in accordance with these Special Provisions.

Upon completion of paving, the Contractor shall adjust all utility frames and miscellaneous facilities to within 1/8-inch of finished grade and shall conform to Standard Plan 123 and the Plans. Water valve frames shall be adjusted to grade within 48 hours after paving is completed.

All damaged or non-conforming frames and covers shall be replaced with new frames and covers conforming to City Standard Plans. Undamaged and conforming frames and covers may be reused. Unused frames and covers may be retained by the Contractor.

(Use following two paragraphs in lieu of above paragraph when appropriate bid items are provided.)

All frames and covers shall be replaced with existing frames and covers except as noted on the plans. Existing broken and non-conforming frames and covers shall be brought to the Engineer's attention at the time of removal. Frames and covers lost or broken by the Contractor shall be replaced at no expense to the City. Unused frames and covers may be retained by the Contractor.

The contract price for replacement of frames and covers shall only include the cost of furnishing the new frames and covers indicated on the plans or as otherwise approved by the Engineer. The contract price for adjustment to grade shall apply to both reused and new frames and covers.

Payment for adjusting facilities to grade shall be in accordance with Section 15-2.07 "Payment" of the Standard Specifications.

Revised November 1986

6-15.05 Salvaged Materials All materials to be salvaged shall be delivered to the Municipal Service Center, 1331 S. Ham Lane, Lodi, CA 95240, during the hours of 8:00 a.m. to noon or 1:00 p.m. to 4:00 p.m.

Payment for delivering salvaged materials shall be considered as included in the price paid for the various items of work and no additional compensation will be allowed therefor.

Revised Dec. 1985

6-16 CLEARING AND GRUBBING

6-16.01 Clearing and Grubbing Clearing and grubbing shall conform to the provisions in Section 16 "Clearing and Grubbing" of the Standard Specifications and these Special Provisions.

Clearing and grubbing shall include all those areas to be improved within the construction limits shown on the plans.

All vegetable growth, buried logs, trees shrubs, concrete, abandoned miscellaneous facilities and any other objectionable material shall be removed or crushed in place, if applicable, to a depth of not less than 6 inches below any compacted material or as directed by the Engineer.

Payment for clearing and grubbing shall be in accordance with Section 16-1.06 "Payment" of the Standard Specifications.

Revised Dec. 1985

6-19 EARTHWORK

6-19.01 Roadway Excavation Roadway excavation shall conform to the provisions in Section 19 "Earthwork" of the Standard Specifications and these Special Provisions.

The roadway excavation shall conform to the line and grades shown on the plans. The compaction requirements for this work shall attain a minimum relative compaction of 95 percent for a minimum depth of 6-inches.

In the event there is surplus excavation, it shall become the property of the Contractor and shall be disposed of outside of the right-of-way in accordance with the provisions in Section 7-1.13 of the Standard Specifications.

All unsuitable material shall be removed and replaced with material on the site as the Engineer may direct.

The contract price paid for roadway excavation shall include full compensation for cutting and removal of existing asphalt concrete, removal and disposal of surplus excavation at a site provided by the Contractor, and shall include the required excavation, grading, and compaction within the work limits as shown on the plans, and specified under these Special Provisions and no additional compensation will be allowed therefor.

The quantity of roadway excavation shall be considered as a final pay quantity, as specified in Section 9-1.015 "Final Pay Quantities" of the Standard Specifications, and no additional compensation will be provided for except when changes have been ordered by the Engineer.

Revised April 1986

6-19.02 Pipe and Structure Excavation and Backfill Excavation end backfill for pipe, manholes and miscellaneous structures shall conform to the provisions in Section 19.3 "Structure Excavation and Backfill" of the Standard Specifications and these Special Provisions.

Pavement and concrete removal shall conform to Section. 6.15-02 "Removal Methods" of these Special Provisions,

All excavation shall be made to the lines and grades shown on the plans. Trench edges shall be no closer than 1 foot to the toe of the gutter unless otherwise approved by the Engineer. Where mud, peat or any unstable or objectionable materiel is encountered at or within 6 inches of the bottom of any excavation, such material shall be removed to a depth of at least. 12 inches below the established grade and the trench brought, to grade by placing a suitable material thoroughly compacted in place, all as approved by the Engineer.

Trench width, bedding and backfill for pipe shall conform to "Pipe Bedding end Backfill Requirements", Standard Plan 501. The bedding shall be Class C or better unless otherwise specified on the plans.

Plastic marking tape, 6" wide, shall be buried 18" to 24" below finish grade over any utility main located outside of the street/sidewalk ares. The tape shall be color coded blue for water lines and green for itewater and drainage lines. The tape shall have black lettering with appropriate "caution" wording and shall be approved by the Engineer.

Ponding or jetting of backfill is not allowed unless specifically shown on the plans.

Trench backfill shall attain a relative compaction of 90 percent. Backfill compaction within the structural section shall be as shown on the plans. Structural backfill around all structures and manholes may be made with native material and shall attain a relative compaction of 92 percent.

Backfill in street areas shall be brought to subcrade and the existing surfacing shall be replaced with the structural section shown on the plans.

Trench backfill shall be accomplished as soon as possible after the pipe has been installed, and in existing streets there shall be no more than 200 feet of open and/or uncompacted ditch at the end of the working day, unless otherwise specified by the Engineer.

The Contractor shall conduct the construction operations so that trench backfill at all intersections is sufficiently adequate to allow two-way traffic in both directions during all phases of construction unless otherwise specified.

Payment for pipe and structure excavation and backfill shell be considered as included in the price paid for the various items of work requiring excavation and backfill end no additional compensation will be allowed therefor.

Revised September 1989

6-19.03 Slurry Cement Backfill Slurry cement backfill shall be used only where shown on the plans or required in the Special Provisions or as specifically approved by the Engineer. It shall conform to Section 19-3.062 "Slurry Cement Backfill" of the Standard Specifications.

Payment for slurry cement backfill shall be considered as included in the price paid for the various items of work requiring slurry cement backfill and no additional compensation will be allowed therefor.

Revised April 1986

6-19.04 Excavation Safety Excavation Safety shall conform to th"e provisions Tn Sections 5-1.02A "Trench Excavation Safety Plans", and 7-1.01E "Trench Safety" of the Standard Specifications and these Special Provisions.

In making excavations for the project, the Contractor shall be fully responsible for providing and installing adequate sheeting, shoring and bracing as may be necessary as a precaution against slides or cave-ins and to fully protect all existing improvements of any kind from damage.

The Contractor shall obtain a permit from the Division of Industrial Safety and shall submit a copy of approved permit to the Engineer prior to the start of excavation. The cost of the permit shall be included in the total bid cost. If the shoring and bracing plan varies from the shoring system standards established by the Construction Safety Orders, the plan shall be prepared by a registered civil or structural engineer.

The criteria given by the California Department of Industrial Relations are MINIMA for the conditions shown thereon. In addition to shoring the excavation as specified, it shall be the Contractor's responsibility to provide any and all additional shoring required to support the sides of the excavation against the effects of loads which may exceed those derived by using the criteria set forth by said governing agency. The Contractor shall be solely responsible for any damages which may result from his failure to provide adequate shoring to support the excavations under any or all of the conditions of loading which may exist or which may arise during the construction project.

The contract price paid per lump sum for excavation safety shall include full compensation for furnishing all labor, materials, permit and equipment and for doing all work involved as specified under these Special Provisions and no additional compensation will be allowed therefor.

Revised April 1986

6-19.05 Compaction Subgrade preparation shall conform to all applicable parts of Section 19-5 "Compaction" of the Standard Specifications and these Special Provisions.

(a) Compact Original Ground

Unless otherwise shown on the plans, compaction requirements for compacting original ground shall be a minimum relative compaction of 92 percent for a minimum depth of 8 inches and the limits shall conform to those shown on the plans.

Any material that is disturbed below the "compact original ground" shall be compacted to a minimum of 90 percent,

(b) Miscellaneous Concrete Subgrade Compaction

The relative compaction of subgrade for all curb, gutter, sidewalk and driveways shall conform to these Special Provisions and to the requirements designated on the plans.

The miscellaneous concrete subgrade shall be graded to conform to the lines and grades shown on the plans. The compaction of the subgrade for miscellaneous concrete shall attain a minimum relative compaction of 90 percent for a minimum depth of 8 inches and 12 inches for commercial driveways.

Any organic Material or other unsuitable material found in the subgrade shall be removed and replaced with an acceptable material, as approved by the Engineer.

Concrete shall not be placed upon the subgrade until the subgrade has been approved by the Engineer. Finish grade shall be within 1/4 inch of plan grade.

(c) Payment (Use appropriate paragraphs)

Payment for compaction shall be in accordance with Section 19-5.06 "Payment" of the Standard Specifications.

The contract price paid per square foot for compacting original ground shall include full compensation for furnishing all labor, materials, tools and equipment, and for doing all the work involved in compacting original ground as shown on the plans and as specified under these Special Provisions and no additional compensation will be allowed therefor.

The contract price paid per square foot for miscellaneous concrete subgrade compaction shall

include full compensation for furnishing all labor, materials, tools and equipment, and for doing all the work involved in compacting and grading the concrete subgrade as shown on the plans and as specified under these Special Provisions, and no additional compensation will be allowed therefor.

Revised April 1986

6-19.06 Imported Borrow Imported borrow shall conform to Section 19-7 "Borrow Excavation" of the Standard Specifications and these Special Provisions.

Payment for imported borrow shall be in conformance with Section 19-7.05 of the Standard Specifications.

Revised April 1986

6-20 SPRINKLERS AND LANDSCAPING

6-20.01 Sprinkler Systems - General Sprinkler systems shall be furnished and installed in accordance with these Special Provisions and as shown on the plans, including any incidental work not shown or specified which can reasonably be inferred as part of the work, and necessary to provide a complete and workable system,

The work includes:

1. Trenching and backfill;
2. Sprinkler material and equipment installation;
3. Maintenance and guarantee of irrigation system for one year;
4. Installation of sprinkler controller, conduit and wiring,

(a) "As-Built" Sprinkler Drawings The Contractor shall prepare an "As-Built" drawing on a blueline print which shall show deviations from the Bid Documents made during construction affecting the main line pipe, controller locations, valves and sprinkler heads. The drawing shall be delivered to Inspector before final acceptance of work.

A map diagram showing location of valves, lateral lines and route of the control wires shall be prepared by the Contractor. The diasram shall identify valves as to size, station, number and type of planting irri.gated, i.e., shrubs or ground cover. The diagram sha11 be submitted to Engineer for review and approval.

(b) Guarantee Work shall be guaranteed for one (1) year from date of acceptance against all defects in material, equipment and execution. Guarantee shall also cover repair of damage to any part of the premises, resulting from leaks or other defects in material, equipment and execution to the satisfaction of the City.

Repairs, if required, shall be done promptly upon notification by City at no cost to City.

(c) Existing Site Conditions Contractor shall become acquainted with all site conditions. Should utilities not shown on the plans be found during excavations, Contractor shall promptly notify the Inspector for instructions as to further action. Failure to do so will make Contractor liable for any and all damage thereto arising from Contractor's operations, subsequent to discovery of such utilities not shown on plans.

Minor adjustments to the sprinkler system layout shall be made as may be required to work around existing construction at no additional cost to the City.

(d) Payment The contract price paid for sprinkler system shall include full compensation for furnishing all materials, labor and equipment to complete the work and no additional compensation shall be allowed therefor.

Revised April 1986

6-20.02 Sprinkler System Materials Materials throughout the system shall be new and in perfect condition. After award of the contract and prior to beginning work, Contractor shall submit for review six (6) copies of the complete list of materials which Contractor proposes to install. Quantities of materials and equipment need not be included. No deviations from the Specifications shall be allowed. The decision of City shall be final in the determination of the quality of materials and equipment.

(a) Plastic Pipe shall be polyvinyl chloride pipe (PVC) conforming to Section 20-15B(1) "Plastic Pipe Supply Line" of the Standard Specifications and these Special Provisions. The class shall be as follows:

In Turf Areas and Planters

1/2" - Class 315 PVC 3/4" - Class 200 PVC 1" and larger - Class 160 PVC

Main Line Piping or Pipe under constant pressure

2" and larger - Class 200 PVC Piping Under

Slabs, Foundations and Paving All sizes - Sen.

40 PVC

Plastic fittings - Schedule 40 PVC as manufactured by Sloane, Lasco, or equal.

(b) Valves shall conform to the following:

Gate valves 3" and smaller shall bronze, Class 125 or 150 with threaded ends, non-rising stem, O-ring stem gasket *or* teflon impregnated asbestos packing and handwheel operator. Gate valves shall be Stockham, Mueller, Kennedy or as supplied with backflow prevention assemblies.

Remote Control Valves shall be as specified on the drawings.

Backflow Assemblies shall be as specified on the drawings,

(c) Miscellaneous Materials shall conform to the following:

Solvent cement shall be compatible with PVC pipe material and size and be of proper consistency. No mixing of solvent with thinner will be allowed Primers shall be used as recommended by the solvent manufacturer.

Control wires shall be 24 volt solid wire U.L. approved for direct burial in ground. (Black #14 UF direct lead and white #12 UF common ground.) 110 volt wire shall be 2-#12, CU, THW, one black, one white.

Sprinkler heads shall be of the manufacture specified in legend on Drawings.

Valve keys sha11 be furnished for adjusting remote control valves. (2 - 30" keys)

Valve boxes shall be furnished for each control valve. Boxes shall be Ametex 12" meterbox with lid marked, "Irrigation," or approved equal.

Quick couplers shall be as indicated on the Drawings.

(d) Controller shall be Irri-trol Model MC-4 with P-1 pedestal or Rain Bird Model RC-LS.

6-20.03 Sprinkler System Installation

(a) Layout shall be done as accurately as possible to conform to the Plans. The Plans, though carefully drawn, are generally diagrammatic to the extent that swing joints, offsets and all fittings are not shown. Job conditions will not always permit locating piping, valves and heads where shown. When this situation occurs, it shall be brought to the Inspector's attention. The Contractor will be held responsible for the relocating of any items without first obtaining Inspector's approval.

(b) Excavating and trenching required for the installation of the work included under this Section, shall be performed as prevent cave-ins, including shoring of earth banks to installations, etc. All surfaces, existing underground, damaged or cut as a result of the

excavations shall be restored to their original condition,

Trenches shall be made with enough width to allow a minimum of 4" between parallel pipe lines. Trenches for pipe lines shall be made of sufficient depths to provide the minimum cover from finish grade as follows:

1. 18" over main lines to remote control valves;
2. 12" over lateral lines to heads;
3. 24" under paved parking areas or roads.

(c) Pipe and fitting assembly shall be done in a workmanlike manner in accordance with the manufacturer's recommendations. Remote control valves shall be installed where shown and grouped together where practical and shall be placed no closer than 12" and parallel to walk edges, buildings and walls. Boxes shall be set with tops matching finish grade.

Pipe and fittings shall be thoroughly cleaned of dirt, dust and moisture before applying primer and solvent.

IMPORTANT - Excess solvent shall be cleaned off. Solvent welded joints shall be cured at least 15 minutes before moving or handling, and at least 24 hours before water is permitted in the pipe.

Pipe may be assembled and welded on the surface. Pipe shall be shaken from side to side of trench to allow for expansion and contraction.

Connections between plastic pipe and metal valves or steel pipe with threaded fittings shall be made using plastic male adapters. A non-hardening pipe dope (Rector seal or teflon tape) shall be applied to male threads.

(d) Sprinkler Heads Openings in the pipe shall be capped or plugged to prevent entry of debris. Lawn heads shall be set flush with finished grade or curb and paving,

(e) Flushing and testing shall be done after all new sprinkler piping is in place. A full head of water shall be used to flush out the system with all heads removed. After the system is thoroughly flushed, risers shall be capped off and the system pressure tested.

All sprinkler lines upstream of remote control valves shall be tested for a period of not less than 2 hours

and shall show no leakage or loss of pressure. Test pressure shall be 100 psi.

Unless otherwise directed by the Engineer, testing shall be accomplished by openings at the high points of the system and blowoffs at all deadends. The valve controlling the admission of water into the section of pipe to be tested should be opened slowly and fully before closing the hydrants or blowoffs. After the system has been filled with water and all air expelled, all the valves controlling the section to be tested shall be closed, and the line remain in this condition for a period of not less than 24 hours.

The pipe shall then be refilled, if necessary, and subjected to the specified pressure for a period of two hours.

All sprinkler lines downstream of remote control valves shall be tested under system pressure. Any observable leaks shall be repaired. Minor leakage at swing/swivel joints is acceptable.

All leaks that are found shall be immediately corrected and the system again subjected to the same test.

All repairs of any damage to the pipes and their appurtenances, or to any other structures, resulting from or caused by these tests, shall be performed by the Contractor as the Engineer may direct, all without cost to the City of Lodi.

At the conclusion of the pressure tests, the heads shall be installed and tested for operation in accordance with design requirements under normal operating pressure.

(f) Backfill and compaction shall be done after required tests and inspections have been made. Backfill shall be made with clean soil, free of rocks and other material that may damage the pipe.

Backfill for all trenches, regardless of the type of pipe covered, shall be compacted to 85% density except where otherwise shown on the Plans.

Backfill shall be dressed off to match finish grades.

Settling of backfilled trenches which may occur during a one (1) year period after acceptance, shall be repaired by the Contractor, including the complete restoration of damaged planting, paving or other improvements of any kind.

(g) Automatic control wiring shall be installed with sprinkler mains and laterals in a common trench wherever possible. Wires shall be a minimum of 1" from any pipe or fitting except at terminal points. Slack shall be provided at valves and wires shall be snaked in trenches to allow for contraction of wires. Tie wires in bundles at 10' intervals with plastic electrical tape.

Control wire splices will be allowed only on runs more than 500 feet. Wires shall be crimped together with Star-Kon #PT-70 connector and sealed with Scotchlok #3576 sealing pack.

(h) Electrical service shall be located and installed as shown on the Plans and shall conform to the provisions of Section 20-5.027E "Service" of the Standard Specifications. The Contractor shall install conduit and wire to the point of connection. Conduit shall conform to the provisions of Section 86-2.05A "Material" of the Standard Specifications.

Revised November 1986

6-20.04 Turf - General Turf shall be furnished and installed with these Special Provisions and as shown on the Plans. Subgrade condition and grading shall be approved by the Engineer prior to turf installation.

(a) 90-Day Maintenance Period The Contractor shall be completely responsible for the general maintenance of the entire sprinkler system and the turf for a minimum period of ninety days from the time of first watering.

During this maintenance period, any required repairs or adjustments to the sprinkler system shall be made without additional compensation.

The Contractor will be required to adequately water the sod, fill low spots, replace unsuitable growth, or do weed control and other work, as determined necessary by the Engineer, during the 90-day maintenance before final acceptance of the contract.

Mowable weeds and grasses shall be kept mowed off before they exceed two inches in height. Clippings shall be removed unless otherwise approved by the Engineer. The planted areas shall be maintained in a neatly mowed condition at all times.

Working days upon which no work will be required, as determined by the Engineer, will be credited as one of the maintenance days, regardless of whether or not the Contractor performs work.

Working days when the Contractor fails to adequately perform plant establishment work, including but not limited to watering planted area, mowing, filling low spots, replacing unsuitable growth, or controlling weeds, determined to be necessary by the Engineer, will not be credited as one of the maintenance days.

At the end of the 90-day maintenance period, the stand of grass to be acceptable shall be weed free and have no more than 3 percent of the total area in bare spots which shall close in at maturity and produce a full coverage turf. Unacceptable areas shall be reseeded.

(b) Cleanup and Final Inspection - Final inspection for approval and acceptance shall be made at the conclusion of the maintenance period. Prior to being considered for inspection, the Contractor shall have performed, within the entire project limits, a final weeding, mowing and clearing of all the debris so as to present the work in a neat and orderly appearance.

(c) Imported borrow (topsoil shall conform to the provisions of Section 20-2.01 "Topsoil" of the Standard Specifications.

The contract price paid per cubic yard for imported borrow shall include full compensation for furnishing, transporting, placing, grading and compacting, and doing all the work as shown on the Plans and Specifications and no additional compensation will be allowed therefor.

Revised November 1986

6-20.05 Turf-Sod

(a) Sod bed preparation and fertilization shall conform to the applicable provisions of Section 20-3 "Erosion Control" of the Standard Specifications and these Special Provisions.

Soil amendment shall be added at one (1) inch in depth to existing soil. The existing soil with soil amendment shall be cultivated to a depth of three (3) inches and all clods and lumps shall be broken up or removed. The area shall be raked to remove all debris of any kind. Grading and shaping refinements shall be performed to bring surface to true uniform sloping planes free from irregularities and to provide proper and adequate drainage to designated collection points.

Soil amendments shall be Red or Fir compost mix (Marley Company) or equal with 1% nitrogen except as otherwise approved by the Engineer.

After placing imported borrow and sprinkling and when the soil is friable, the Contractor shall cultivate and cross cultivate the entire area to a depth of six inches. Fertilizer shall then be applied in the amount of 42 pounds of nitrogen, 21 pounds of phosphorus and 42 pounds of potassium per acre (14-7-14 at 7 pounds per 1,000 square feet) and worked into the soil during this cultivating process.

At the end of the 90 day maintenance period, one-half of the above named amount shall again be applied.

If foreign material is exposed by the cultivation, it shall be immediately removed from the area.

When the soil has reached a condition of good tilth, the entire area shall be finish graded with a suitable implement to produce a sod bed which is smooth, uniform and ready for planting. All rocks, clods, etc., over one inch in diameter shall be removed from the upper two inches of soil.

(b) Sod shall be weed free, viable, and of the type shown on the Plan. A written certification of the sod shall be furnished upon the request of the Engineer, and no placing of sod shall be allowed prior to approval by the Engineer.

(c) Sod installation shall be done with closely fitted joints, and the ends of the strips shall be staggered. On irregular shaped areas, sod shall be laid in both directions from the longest straight line that can be drawn through the area. Sod shall be rolled after an initial watering to eliminate irregularities. Immediate initial watering is very important to sod survival. Do not over irrigate causing a spongy soil condition.

The Contractor shall be responsible for such protection of the turfed area as necessary to prevent trespassing.

(d) Payment - The contract price paid for turf-sod shall include full compensation for furnishing all labor, materials, tools and equipment, cultivating, preparing the soil, placing sod, grading, soil amendment, maintenance, fertilizers, and for doing all work involved in placing sod as shown on the plan and specified under these Special Provisions, and no additional compensation will be allowed therefor.

6-20.06 Turf-Seeded

(a) Seed Bed Preparation and Fertilization The seed bed preparation and fertilization shall conform with the applicable parts of Section 20 of the Standard Specifications and these Special Provisions.

Soil amendment shall be added at one (1) inch in depth to existing soil. The existing soil with soil amendment shall be cultivated to a depth of three (3) inches and all clods and lumps shall be broken up or removed. The area shall be raked to remove all debris of any kind. Grading and shaping refinements shall be performed to bring surface to true uniform sloping planes free from irregularities and to provide proper and adequate drainage to designated collection points.

Soil amendments shall be Red or Fir compost mix (Marley Company) or equal with 1% nitrogen except as otherwise approved by the Engineer.

After the sprinkler system is installed and before seed bed cultivation, the Contractor shall thoroughly clean the area of all foreign material such as rocks, rubble, sticks, roots, wire and any other objectionable material as the Engineer may direct.

After sprinkling and when the soil is friable, the Contractor shall cultivate and cross cultivate the entire area to a depth of six inches. Fertilizer shall then be applied in the amount of 42 pounds of nitrogen, 21 pounds of phosphorus and 42 pounds of potassium per acre (14-7-14 at 7 pounds per 1,000 square feet) and worked into the soil during this cultivating process.

At the end of the 90 day maintenance period, one-half of the above named amount shall again be applied.

If foreign material is exposed by the cultivation, it shall be immediately removed from the area.

When the soil has reached a condition of good tilth, the entire area shall be finish graded with a suitable implement to produce a seed bed which is smooth, uniform and ready for planting. All rocks, clods, etc., over one inch in diameter shall be removed from the upper two inches of soil.

The Contractor's attention is directed to the fact that during final grading, the entire area shall be sloped to drain to the existing catch basins. The Contractor is responsible for eliminating all low spots by regrading or filling during the final grading and maintenance period.

The Contractor shall not plant seed until the bed has been approved by the Engineer.

(b) Seed Turf seed shall be weed free, viable, of the following mix:

40% Manhattan Perennial Rye Grass or approved equal, 98% purity, 90% germination rate;

20% Creeping Red Fiscue, 97% purity, 85% germination rate;

40% Newport Blu Kentucky Bluegrass, 98% purity, 87% germination rate;

All seed shall be Blue Tag certified

Seed shall be brought to the job in suitable bags bearing the dealer's label. A written certification of the seed shall be furnished upon the request of the Engineer, and no seeding shall be allowed prior to approval of the seed by the Engineer.

(c) Turf Seeding The Contractor shall sow the seed during a windless period by an approved method at the rate of not less than 300 pounds per acre. After seeding, the area shall be rolled with a ring-type roller or an equivalent approved piece of equipment to insure the seed being covered with soil to a depth no greater than 1/4-inch The seeded area shall be free of any excessive ridges or depressions so as to insure proper surface drainage. Watering of the seeded area shall be done slowly but thoroughly.

At the Contractor's option, seed may be sown using the hydromulch method. The equipment and procedure shall be submitted prior to seeding for approval by the Engineer.

The Contractor shall be responsible for such protection of the seeded area as necessary to prevent trespassing.

(d) Payment The contract price paid for turf-seeded shall include full compensation for furnishing all labor, materials, tools and equipment, cultivating, preparing the soil, seeding, grading, maintenance, and for doing all work involved in seeding areas shown on the Plans and specified under these Special Provisions, and no additional compensation will be allowed therefor.

6-20.07 Planting - General Planting shall consist of furnishing and installing planting materials including preparing planting areas, planting and establishing plants and other

incidental work in accordance with the applicable provisions of Section 20-4 "Highway Planting" of the Standard Specifications, these Special Provisions and the details shown on the Plans.

Payment for planting shall be included in the contract price paid per each for trees and shall include full compensation for furnishing all labor, materials, tools and equipment involved in excavating, preparing the soil, placing the trees, staking, fertilizing, backfilling, and for doing all the work involved in placing trees as shown on the plan and specified under these Special Provisions, and no additional compensation will be allowed therefor.

Revised April 1986

6-20.08 Planting materials shall conform to the requirements of the Plant List on the plans and to "Horticultural Standards" of the American Association of Nurserymen as to kind, size, age, etc.

Plant names used in the plant list conform to "Standardized Plant Names" by American Joint Committee on Horticulture Nomenclature, except in cases not covered therein. In these instances, the custom of the nursery trade is followed.

Substitution will not be permitted unless approved by the Engineer.

All plants shall be sound, healthy, vigorous, free from plant disease, insect pests or their eggs, and shall have healthy normal root systems and comply with all State and local regulations governing these matters, and be free from any noxious weeds.

Plants shall not be pruned prior to delivery except as authorized by the Engineer. In no case shall trees be topped before delivery.

All plant materials shall be subject to approval of size, health, quality and character by the Engineer.

Where caliper or other dimensions of any plant materials are omitted from the Plant List, it shall be understood that these plant materials shall be normal stock for type listed.

Plant material larger than those specified may be supplied in complying in all other respects and at no additional cost to City.

Plant materials shall be symmetrical, and/or typical for variety and species and conform to size specified in the Plant List.

All plant materials shall be provided from a licensed nursery or other source which has been previously inspected by the County Horticultural Department and shall be subject to acceptance as to quality by the Inspector.

Plant stakes shall be two (2) inch diameter lodgepole pine and 10 feet in length.

Plant ties shall be reinforced rubber straps, one (1) inch wide by ten (10) inches long, with a 1/8 inch minimum thickness. Rubber straps shall have double wire ties 12 inches long at each end of strap.

Fertilizer tablets shall be 21 ounce size with a composition of 20-10-5 nutrient mix of nitrogen, phosphate and potash unless otherwise shown on the plans.

6-20.09 Planting Operations All plants shall be planted, staked, and tied according to the details shown on the plan.

Trees shall be thoroughly watered immediately after planting.

In the event that underground construction work or obstructions are encountered in excavation of the tree holes, alternate locations will be selected by the Engineer.

All Trees shall be pruned to remove broken and damaged limbs and branches.

Revised November 1986

6-22 CLEAN-UP

Clean-up shall conform to the provisions in Section 22 "Finishing Roadway" of the Standard Specifications and these Special Provisions,

Upon completion of the work, and prior to requesting final inspection, the work area shall be thoroughly cleaned of all rubbish, construction forms, stakes, excess material, and equipment, and all portions of the work shall be left in a neat and orderly condition. The final inspection will not be made until this has been accomplished.

Full compensation for clean-up shall be considered as included in the price paid for the various contract items of work requiring finishing, and no additional compensation will be allowed therefor.

Revised April 1986

6-26 AGGREGATE BASE

Aggregate base shall be Class 2 and shall conform to the provisions of Section 26 "Aggregate Bases" of the Standard Specifications and these Special Provisions,

Aggregate grading shall be 3/4" maximum unless otherwise approved by the Engineer. The Contractor shall submit current gradation, R-value, sand equivalent, and durability index test results as requested by the Engineer.

Aggregate base shall not be placed until the subgrade has been approved by the Engineer. In lieu of the placement requirements specified in Section 26, aggregate base material shall be placed upon prepared subgrade in a uniform windrow or layer, and after placing, the material shall be graded, compacted and watered in accordance with the requirements of Section 26-1.05 "Compaction" of the Standard Specifications and the Construction Plans. Motor graders may be used for the aforementioned grading. Tailgate placing of the material by dump trucks will not be permitted except in areas not readily accessible to approved spreading devices.

Aggregate base shall be compacted as specified in the Standard Specifications to f relative compaction of 95 percent.

Finished grade shall be within 0.05 feet of plan grade.

The contract price paid per ton of aggregate base shall include full compensation for furnishing all labor, materials, tools and equipment and for doing all work involved in placing, compacting and watering aggregate base as shown on the plans and as specified in these Special Provisions, and no additional compensation will be allowed therefor.

Revised September 1989

6-36 PENETRATION TREATMENT

6-36.01 Liquid Asphalt Penetration Treatment Liquid asphalt penetration treatment shall conform to the provisions of Sections 36 "Penetration Treatment" of the Standard Specifications and these Special Provisions.

Prior to applying the liquid asphalt, the surface to be treated shall conform to the grades and compaction requirements shown on the plan and described in Section 6-19 of these Special Provisions and shall be clean of all loose or extraneous material. After approval from the Engineer, the roadbed shall be treated with SC-250 liquid asphalt at the rate of 0.45 gallons per square yard in two applications. The first application shall be at the rate of 0.25 gallons per square yard and the balance applied when the first application has fully penetrated the surface, or as approved by the Engineer. Alternate 1iquid asphalt grades and application rates may be required by the Engineer depending on ambient temperature and other factors. The liquid asphalt shall be applied with a full-circulation bar distributor and in conformance with Section 93-1.03, "Mixing & Applying," of the Standard Specifications.

After the final application of liquid asphalt has finished penetrating, any excess asphalt shall be covered with sand in conformance with Section 36-1.05, "Sand Cover," of the Standard Specifications. All evidence of excess liquid asphalt on the curbs, gutter and/or sidewalks and all excess sand shall be removed before final acceptance.

The contract price paid per ton of liquid asphalt shall include full compensation for preparation for treatment, furnishing and applying liquid asphalt and sand cover and remaining excess sand and asphalt and no additional compensation will be allowed therefor,

Revised April 1986

6-39 ASPHALT CONCRETE

6-39.01 General Asphalt concrete shall be Type B and shall conform to these Special Provisions and the following sections of the Standard Specifications:

39-1 General
39-2 Materials
39-3 Storing, Proportioning and Mixing Materials 39-4.01 Subgrade 39-4.02 Prime Coat and Paint Binder

All bituminous binder shall be viscosity grade AR-4000 liquid asphalt except AR-8000 liquid asphalt shall be used when the ambient temperature is over 90 to 95 F. Asphalt shall conform to those applicable parts of Section 92 "Asphalt" of the Standard Specifications.

The mineral aggregate shall be 3/4-inch maximum size for base courses when such work constitutes 100 or more tons, and shall be as specified on the plans for the finish course.

ms, the aggregate size may be the same as the finish
Asphalt concrete work required at manholes, water valves,
ing, and other miscellaneous facilities shall be 3/8-inch

Medium gradations shall be used. For base course work less than 100 tons, the aggregate size may be the same as the finish course,
feathering.
maximum size,

Asphalt concrete shall not be placed until the subgrade has been approved by the Engineer. Unstable subgrade shall not be paved. A prime coat is not required.

SS-1 asphaltic emulsion shall be applied to existing pavements, lower courses of new pavements (unless upper course is being applied in the same day and the lower course is clean), and vertical edges of new or existing pavements, prior to paving. If recommended by the manufacturer, the emulsion may be diluted up to 1:1. Immediately before applying the emulsion, the surface shall be cleaned of all dirt and loose material. Asphaltic emulsion and application shall conform to the applicable parts of Sections 94 "Asphaltic Emulsions" and 39-4.02 "Prime Coat and Paint Binder" of the Standard Specifications.

Revised Dec. 1985

6.45

6-39.02 Pavement Reinforcing Fabric Pavement reinforcing fabric shall conform to the provisions of Section 39-4.03 "Pavement Reinforcing Fabric" and Section 88 "Engineering Fabrics" of the Standard Specifications and these Special Provisions.

Prior to placing the fabric, the existing pavement to receive the fabric shall be cleaned to the satisfaction of the Engineer of all materials such as, but not limited to, vegetation, sand, dirt, gravel and water.

Cracks in the pavement will be filled by the City prior to placing the fabric.

Placement of the fabric shall be made only under the following conditions:

1. The ambient air temperature is above 50°F and rising;

2. The pavement is dry and the pavement temperature is 40 F and rising.

The surface area to receive the fabric shall be sprayed with pavement asphalt type AR-4000 at a rate of 0.25+/- 0.03 gallons per square yard.

The width of asphalt application will be the fabric width, plus four inches. The fabric shall overlap 2-4 inches at the longitudinal joints and 2-4 inches at the transverse joints. No joints shall be lapped with more than two layers of fabric. Transverse joints shall be shingled in the direction of the paving to prevent edge pick-up by the paver.

The fabric shall be placed into the asphaltic binder with a minimum of wrinkles that lap, and broomed or squeeged to remove any bubbles prior to the binder cooling substantially enough so that the fabric will not adhere to it.

The equipment used to place the fabric shall be approved by the Engineer.

The contract price paid per square yard for the Pavement Reinforcing Fabric shall include full compensation for furnishing all labor, material, tools, equipment and incidentals and for doing all the work involved in furnishing and placing the fabric complete in place as shown on the plans and as specified under these Special Provisions, and no additional compensation will be allowed therefor.

Revised Dec. 1985

6-39.03 Street Paving Street paving consists of spreading and compacting asphalt concrete in streets excluding miscellaneous areas as defined in Section 39-7 and these Special Provisions. Street paving shall be in conformance with Section 39-5 "Spreading and Compacting Equipment" and Section 39-6 "Spreading and Compacting''of the Standard Specifications.

The asphalt concrete shall comply with Section 6-39.01 "General" of these Special Provisions.

The amount of asphalt binder to be mixed with the aggregate shall be between 4 percent and 7 percent by weight of the dry aggregate. The fourth through seventh paragraphs in Section 39-3.03 "Proportioning" of the Standard Specifications shall not apply. When required by the Engineer, the Contractor shall submit a mix design for approval 15 days prior to paving.

Spreading and compacting shall conform to the Standard Specifications with the following exceptions:

Asphalt concrete shall not be spread with blading equipment; Vibratory rollers may be used with the approval of the Engineer;
The roller requirements of Section 39-5.02 "Compacting Equipment" may be reduced to one 2-axle steel tired tandem roller and one pneumatic tired roller provided the production rate allows the finish rolling to be accomplished satisfactorily; 3-wheel rollers
Asphalt concrete are prohibited;
according to the shal 1 be spread and compacted in
by the Engineer: foil owing table unless otherwi: se

Total required	Top ayer 1	Next layer	Next an laye r
		down	down
.20' or less	tota	-	-
.25'	0.10	0.15'	-
.30'	0.15	0.15'	-
,35'	0.20[1]	0.15'	-
,40'	0.20	0.20'	-
,45'	0.20	0.25'	-
,50'	0.20	0.30'	-
,55'	0.20	0.15[1]	0.20'
,60'	0.20	0.20'	0.20'
.65'	0.20	0.20'	0.25'
0.70'	0.20	0.20'	0.30'

ayers approved

Compacting equipment reductions in Section 39-6.03 "Compacting" apply except (3) in which the total amount of asphalt concrete included in the contract is reduced to 500 tons;

6. Seal coat per Section 39-7.02 "Seal Coat" is not required.
7. The dumping of material in a windrow, in accordance with Section 39-5.01 "Spreading Equipment", shall be limited to

300 feet in advance of the paving machine, unless otherwise permitted by the Engineer. This requirement does not relieve the Contractor of other requirements relating to temperature, spreading and compacting.

Asphalt concrete shall be placed with pavers equipped with full electronic controls capable of reproducing grade controls with a 0.01 foot tolerance. Grade controls shall be provided on both sides of the paver and shall consist of two of the following:

- Sensors activated by a ski device not less than 30 feet long riding on an approved graded surface;
- Sensors activated by a foot or shoe riding on a previously placed mat or curb;
- Sensors activated by a foot or shoe riding on a grade wire with grade stakes at 25 foot intervals provided by an Engineer or Land Surveyor.

Should the methods and equipment furnished by the Contractor fail to produce a layer of asphalt concrete conforming to the requirements, including straightedge tolerance, of Section 39-6.03, "Compacting," of the Standard Specifications, the paving operations shall be discontinued and the Contractor shall modify his equipment or furnish substitute equipment,

The completed surface shall be thoroughly compacted, smooth, true to grade and cross section and free from ruts, humps, depressions or irregularities. Depressions over 0.02 feet in 10 feet and other surface irregularities shall be corrected to the satisfaction of the Engineer.

Miscellaneous facilities shall be adjusted to grade in accordance with Section 6-15.04 "Adjusting Facilities to Grade" of these Special Provisions.

Pavement defects shall be corrected at no additional cost to the City. No payment will be made for tonnage of asphalt concrete used in corrective work,

The contract price paid per ton of asphalt concrete shall include full compensation for furnishing all labor, materials, tools and equipment, furnishing and applying asphalt emulsions, and for doing all the work involved in furnishing, spreading, compacting and correcting asphalt concrete and no additional compensation will be allowed therefor.

Revised June 1988

6-39.04 Trench Replacement and Shoulder Paving Trench replacement and shoulder paving consists of spreading and compacting asphalt concrete in the following locations:

(a) trenches
(b) shoulders less than 8 feet wide adjacent to concrete curb and gutter
(c) asphalt sidewalks and ramps
(d) dikes, gutters, aprons and flares
(e) other miscellaneous areas designated by the Engineer

Asphalt concrete shall be produced from commercial quality asphalt and aggregates. The spreading and compacting requirements in Sections 39-6.02, "Spreading," and 39-6.03, "Compacting," of the Standard Specifications will not apply.

The asphalt concrete shall conform to the following requirements:

1. Asphalt concrete shall be produced at a central mixing plant.

2. Aggregate shall conform to the 3/8-inch maximum, specified in Section 39-2.02, "Aggregate," of the Standard Specifications.

3. The amount of asphalt binder to be mixed with the aggregate shall be between 4 percent and 7 percent by weight of the dry aggregate as approved by the Engineer.

4. Spreading and compacting shall be performed by methods that will produce an asphalt concrete surfacing of uniform smoothness, texture, and density.

5. Asphalt concrete shall be spread and compacted in layers according to the following table:

Total required	Top layer	Next layer down
0.20'	or less	total
0.25'		total
0.30'	0.15'	0.15"
0.35'	0.20	0.15'

6. Compaction shall be performed with a tandem roller weighing between 4 and 6 tons unless otherwise approved by the Engineer.

The completed surface shall be thoroughly compacted, smooth, true to grade and cross section and free from ruts, humps, depressions or irregularities. Depressions over 0.03 feet in 10 feet and other surface irregularities shall be corrected to the satisfaction of the Engineer.

Miscellaneous facilities shall be adjusted to grade in accordance with Section 6-15.04 "Adjusting Facilities to Grade" of these Special Provisions.

Pavement defects shall be corrected at no additional cost to the City. No payment will be made for tonnage of asphalt concrete used in corrective work.

(Write appropriate payment section)

The contract price paid shall include full compensation for furnishing all labor, materials, tools and equipment, furnishing and applying asphalt emulsions, and for doing all the work involved in furnishing, spreading, compacting and correcting asphalt concrete and no additional compensation wi 11 be allowed therefor.

Revised Dec. 1985

6-39.05 Asphalt Concrete Leveling Course Asphalt concrete leveling courses including emulsions shall conform to Section 6-39.01 "Asphalt Concrete," and these Special Provisions.

The intent of the leveling course or courses is to fill low or irregularly shaped surfaces to provide a uniform surface for placement of fabrics and/or asphalt concrete paving.

The Contractor shall apply leveling courses to depressions exceeding 0.03 feet in 4 feet and other irregularities as directed by the Engineer. The Contractor's and the Engineer's representatives shall walk the area to be paved and determine the areas to be leveled.

Where the required thickness of the leveling course will exceed 0.20 feet, the leveling course shall be applied in layers. The application shall be such that the narrowest layer is on the bottom and each successive layer extends beyond the edges of the lower layer,

Where the thickness required is less than one-half inch, asphalt concrete shall be No. 4 maximum in accordance with Section 39 "Asphalt Concrete" of the Standard Specifications.

The asphalt concrete shall be spread by any means to obtain the specified results and shall be compacted with a tandem roller weighing between 4 and 6 tons unless otherwise approved by the Engineer.

The contract price paid per ton of Asphalt Concrete Leveling Course shall include full compensation for furnishing all labor, materials, tools, equipment, incidentals and for doing all work involved in furnishing and placing asphalt concrete leveling courses complete in place as shown on the plans or as specified under these Special Provisions and no additional compensation will be allowed therefor.

-- November 1 986

6-39.06 Pavement Repair Existing pavement areas indicated on the plans shall be repaired as specified in these Special Provisions. Additional repair areas may be designated by the Engineer in the field.

Existing surfacing shall be removed in accordance with Section 6-15.02 "Removal Methods" of these Special Provisions to a depth of 0.4 feet and replaced with asphalt concrete unless otherwise shown on the plans.

The underlying subgrade shall be compacted to a relative compaction of 92% for a minimum depth of 8". In lieu of compaction of native material, the subgrade may be replaced with 6" of Class 2 aggregate base in accordance with the applicable provisions of Section 26 "Aggregate Base" of the Standard Specification,

The contract price paid per square foot for pavement repair shall include full compensation for cutting and removing existing surfacing, compacting subgrade and replacing with asphalt concrete and no additional compensation will be allowed therefor.

November 1986

6-42 PAVEMENT GRINDING

Pavement grinding shall be done at the locations and to the grades shown on the Plans in accordance with these Special Provisions.

Grinding shall be performed with abrasive grinding equipment utilizing carbide or diamond cutting tips.

Residue from grinding shall be removed from the roadbed by sweeping or washing.

Residue from grinding operations shall not be permitted to flow into gutters or other drainage facilities or across lanes occupied by public traffic. Solid residue resulting from grinding operations shall be removed from pavement surfaces before such residue is blown by the action of traffic or wind. The noise level created by the combined grinding operation shall not exceed 86dBA at a distance of 50 feet measured at right angles to the direction of travel.

Pavement grinding shall be measured by the lineal foot or square foot as shown in the proposal. The contract price paid for grinding existing pavement shall include full compensation for furnishing all labor, materials, tools, equipment and incidentals, and for doing all work involved in grinding the existing pavement and removing residue, including furnishing water for washing the pavement, as shown on the plans, and as specified under these special provisions, and no additional compensation will be allowed therefor,

Revised November 1986

6-55 STEEL STRUCTURES

6-55.01 General The steel structures shown on the plans shall Tie constructed in accordance with the details shown, the applicable portions of Section 55 "Steel Structures" of the Standard Specifications, and these Special Provisions.

Four copies of working drawings shall be furnished to the Engineer for approval at least 10 working days prior to fabrication.

The working drawings shall show details of any permitted options proposed in the work, details for connections not dimensioned on the plans, the sequence of shop and field assembly and erection, welding sequences and procedures, the location of butt welded splices, and the location of any temporary supports that are to be used.

Unless otherwise noted in the plans and specifications, all materials and fabrication shall conform to Section 55-2 "Materials" and Section 55-3 "Fabrication" of the Standard Specifications.

Revised April 1986

6-59 PAINTING

6-59.01 General All required painting shall be done in accordance with the plans, the applicable portions of Section 59 "Painting" of the Standard Specifications, these Special Provisions and the coating manufacturer's recommendations,

Attention is particularly directed to the following Sections of the Standard Specifications:

59-1.02 Weather Conditions
59-1.03 Application
59-1.05 Protection Against Damage
59-2 Painting Structural Steel

Revised April 1986

6-62 STORM DRAINS

6-62.01 General Storm drain pipe and appurtenances shall be furnished and installed in accordance with applicable sections of the Standard Specifications, these Special Provisions and as shown on the plans. Storm drain pipe shall be either asbestos cement pipe, precast concrete pipe, or PVC pipe up thru 15 inch. Cast-in-place pipe and corrugated metal pipe shall only be used where specifically shown on the plans.

PVC storm drains shall be furnished and installed in accordance with Section 6-71.04 "Polyvinyl Chloride Pipe (PVC)" of these Special Provisions. Approved rubber ring water stops or adaptors shall be used at all junctions with manholes, catch basins and other structures. PVC pipe shall not be used where the depth of cover is less than three feet.

Tying pipe into existing structures shall be done by carefully breaking an opening in the wall of the structure and inserting the pipe so the end is flush with the inside wall. After insertion, the annular space shall be tightly packed with a non-shrink grout (Burke, Horn or approved equal). The mortar shall be placed in accordance with the manufacturer's instructions and troweled smooth and flush with the i-terior surface of ..j.e manhole.

At new structures, the pipe shall be cast into the wall as shown on the appropriate Standard Plan. As an alternate, pipe may be laid through the structure and the structure constructed around the pipe. The top of the pipe shall then be removed and the edge grouted smooth.

Upon completion of backfill, prior to paving, the City may inspect storm drains with closed-circuit television equipment. Defective work shall be repaired by the Contractor in a method approved by the City prior to final paving. The television logs will be made available to the Contractor for review.

Defective work shown by TV or other inspection includes:

- Cracks, openings, leaks, or breaks in the pipe or structures;
- Joints offset more than 1/2" or 1% of the inside diameter, whichever is greater;
- Standing water exceeding 0.20 foot
- Protruding, folded or otherwise deformed gaskets

All repairs of defective work shall be made at no cost to the City. Reinspection of repairs will be made by the City at the Contractor's expense.

Trench patch shall conform to the applicable provisions of Section 6-39.04 "Trench Replacement and Shoulder Paving" of the Special Provisions, and the details shown on the plans.

"Building A Better Community"

Public Works Department

Public Improvement Design Standards

May 1991

City of Lodi Public improvement Design Standards

Introduction

I -1 Purpose and Scope 1

I -2 Design 1

I -3 Authority 1

Section 1 - Streets

1100 General 2

1.101 Scope 2

1.102 Submittals 2

1.200 Design Volumes 2

1.201 General 2

1.202 Traffic Studies 3

1.300 Street Design 4

1 301 General Design 4

1 302 Cross Section 5

1.303 Intersection/Driveway Sight Distance .' 5

1.304 Vertical Alignment 6

1 305 Horizontal Alignment 8

1 306 Medians 9

1.400 Driveways 9

1.401 General Requirements 9

1.402 Special Driveways 9

1 403 Width 10

1.404 Distances from Curb Returns 10

1 405 Distances From Utility or Safety Devices 10

1.406 Distance Between Driveways 10

1 407 Distances From Property Line 10

1.408 Removal 10

1.409 Parking Lot Driveways 11

1.410 Driveway Slope 11

1.500 Curb, Gutter and Sidewalk 11

1.501 General Requirements 11

1.502 Curb and Gutter Type 11

1 503 Sidewalk 12

1.504 Wheelchair Ramps 12

1.505 Back of Sidewalk 12

1.600 Structural Section 12

Section 2-Wastewater

2.100 General 14

2.101 Scope ..... u

2.102 Submittals 14

2.200 Design Flow 15

2.300 Pipe Design 16

2.301 Minimum Size 16

2.302 Design Depth of Flow 16

2.303 Slope 16

2 304 Vertical Alignment 17

2.305 Horizontal Alignment 17

2.306 Pipe Materials 18

2 307 Joints and Fittings 18

2.400 Services 18

2.401 General 18

2.402 Monitoring Structures 19

2.403 Traps and Waste Interceptors 19

2.500 Manholes and Miscellaneous Structures 19

2.501 Manholes 19

2.502 Drop Manholes 19

2.600 Lift Stations 19

2.601 General 19

2.602 Design 19

2.603 Force Mains 21

Section 3 - Storm Drainage

3.100 General 22

3.101 Scope 22

3.102 Submittals 22

3.200 Design Flow 23

3.300 Pipe Design 23

3.301 Minimum Size 23

3 302 Design Depth of Flow (Hydraulic Grade Line) 23

3 303 Slope 24

3.304 Vertical Alignment 24

3.305 Horizontal Alignment 25

3.306 Pipe Materials 25

3.307 Pipe Joints 26

3.400 Services 26
3.401 General 26
3.402 On-site Design Requirements 26
3.500 Manholes and Miscellaneous Structures 27
3.501 Manholes 27
3.502 Catch Basins 27
3 600 Pump Stations 2%
3.700 Detention Basins 2%
3 701 General Requirements 28
3.702 Temporary Basins 2%
3 703 Permanent Basins 29

SECTION 4 -Water

4.100 General 30
4.101 Scope 30
4.102 Submittals 30
4.200 Design Flow 31
4,300 Pipe Design 31
4.301 Minimum Size 31
4 302 Design Pressure 32
4.303 Slope 32
4.304 Vertical Alignment 32
4.305 Horizontal Alignment ..... .32
4 306 Pipe 33
4 307 Joints 33
4.400 Services 33
4.401 General 33
4 402 Domestic Service 33
4 403 Fire Service 34
4.500 Valves, Fire Hydrants and Miscellaneous Appurtenances 36
4.501 Valves 36
4.502 Fire Hydrants 37
4 503 Blow-offs and Temporary Connections 37
4.504 Thrust Blocks ..... .37

Section 5 - Miscellaneous Requirements

5.100 Maps and Easements ..... .38
5.101 Maps 3%
5.102 Easements ..... .38

5.200 Improvement Plans and Specifications 39
5.300 As-built Plans and Certifications 40
5.400 Traffic Control 41
5.500 Soils Reports 41
5.600 Grading and Earthwork 41
5.601 Grading Plans 41
5.602 Dust Control 42
5.603 Erosion Control 42
5.700 Trench and Pipe Strength Design 42
5.701 General 42
5.702 Soils Investigation 43
5.703 Flexible Pipe 43
5.703.1 Ductile Iron Pipe 43
5.703.2 Polyvinyl Chloride (PVC, ASTM D3034) 44
5.703.3 Polyvinyl Chloride (PVC, AWWA C900) 44
5.704 Rigid Pipe 44
5.704.1 Asbestos Cement Pipe (AWWA C400) 44
5.704.2 Concrete Pipe (ASTM C14, C76) 44
5.704.3 Vitrified Clay Pipe (ASTM C700) 44

Appendix

A-1 Improvement Plan Requirements 45
A-1.1 General Requirements 45
A-1.2 Plan Notes 45
A-1.3 Checklist 46
A-2 Bid Item List 51
A-3 Wastewater Flow Calculation Sheet 53
A-4 Storm Drainage Calculation Sheet 54
A-5 References 55

A-07-234

MEMORANDUM OF UNDERSTANDING
COUNTY SERVICE AREA NO. 31 - "FLAG CITY"
DOMESTIC WASTE CONNECTION

THIS Memorandum of Understanding ("MOU") is entered into this 27 day of MAR, 2007, (the "Effective Date"), between THE COUNTY OF SAN JOAQUIN, a political subdivision of the State of California ("County"); COUNTY SERVICE AREA No. 31, a County Service Area established by the County of San Joaquin pursuant to the County Service Area Law of the State of California ("Flag City"); and the CITY OF LODI, a municipal corporation organized and existing under the laws of the State of California ("Ciy"). Flag City, as a County Service Area, is merely an administrative unit of County and is referred to separately in the Agreement purely for administrative convenience.

RECITALS

This MOU is predicated upon the following findings:

A. Flag City is a County Service Area located at the intersection of Highway 12 and Interstate 5, in San Joaquin County, California, four (4) miles west of the corporate limits of the City of Lodi. Flag City currently operates a secondary wastewater collection system and treatment facility; however. the treatment facility needs major upgrades to meet State discharge requirements.

5. The City, through its General Plan, is committed to encouraging agricultural uses in the area surrounding the City and discouraging urban uses. The City of Lodi's General Plan contains the fallowing land use element goals:

a. Policy LU-A.l - The City shall seek to preserve Lodi's small-town and rural qualities.

b. Goal LU-B - To preserve agricultural land surrounding Lodi and to discourage premature development of agricultural land with nonagricultural uses, while providing for urban needs.

c. Policy LU-B.1 - The City shall encourage the preservation of agricultural land surrounding the City.

d. Policy LU-6.2 - The City should designate a continuous open space greenbelt around the urbanized area of Lodi to maintain and enhance the agricultural economy.

e. Policy LU-B.6 - The City shall encourage San Joaquin County to retain agricultural uses on lands adjacent to the City.

C. The *City* encourages compact development and discourages leapfrog development and urban sprawl within the Highway 12/Interstate 5 corridor, all of which would be inconsistent with the above general plan goals. The *City's* General Plan is committed to the above goals within its own boundaries as well, stating the following:

a. A-5 The City shall require specific development plans in areas of major new development.

b. E-2 The *City* shall promote downtown Lodi as the primary pedestrian-oriented, commercial area of Lodi.

c. E-4 The City shall ensure the new commercial development be designed to avoid the appearance of strip development.

d. E-7 In approving new commercial projects, the City shall seek to ensure that such projects reflect the City's concern for achieving and maintaining high quality development.

D. Providing wastewater treatment service to Flag City on the condition that service not be afforded to developments that conflict with the goals set forth herein furthers those goals by concentrating development in an existing County Service Area with set boundaries.

E. County acknowledges the goals set forth in the Lodi General Plan as set forth above, and has similar provisions in its General Plan which encourage agricultural uses, compact land use and development, and discourage "leap frog development" and "urban sprawl." Toward these ends, the County General Plan provides:

1. To make efficient use of land and promote a functional development pattern with varied and compatible land uses.

2. To minimize the effect on agricultural lands and other environmental resources while providing for orderly growth.

3. To create a visually attractive County.

4. To avoid the problems and costs imposed on local government by development that does not have adequate services.

5. Rural Communities Shall:

(a) be planned to have minimal growth, mainly infill development, with expansion discouraged;

(b) be planned to Serve the immediate needs of the community's residents or the surrounding agricultural community;

(c) have a minimum land area of 50 acres or have been identified on the General Plan 1995 map as a residential area.

6. Development shall be orderly and compact.

7. Development should occur on vacant lots within existing communities as "infill" before extending beyond the current developed areas of a community.

8. Freeway Service:

(1) Function: Provide for commercial uses oriented almost exclusively to serving the needs of the freeway traveler.

(2) Typical Uses: Travel-related businesses including gasoline service stations, food and beverage sales, eating and drinking establishments, and hotels and motels.

(3) Development and Locational Criteria: Freeway Service areas shall be:

(A) designated only adjacent to full freeway interchanges where development will be easily accessible and visible to the freeway traveler.

(B) limited in number to encourage clustering of uses at selected interchanges;

(C) limited in area in order to reduce impacts on surrounding land uses and control the physical and visual extent of these areas;

(D) developed so that buildings occupy no more than 60 percent of the lot and are no more than 3 stories in height; and

(E) designed in an attractive manner that creates a favorable impression of the County by considering the overall site design, landscaping, scale of development, signage, relationship to adjacent uses, circulation and parking, and architecture.

F. There is a need for upgraded sewer treatment facilities to service Flag City and the parties wish to cooperatively ensure that any development that occurs in Flag City is orderly, compact, and in compliance with the goals of the City and County General Plans.

NOW THEREFORE, the parties to this MOU agree as follows:

1. Definitions. Unless otherwise defined in this MOU, all capitalized terms will have the definitions ascribed to them in Lodi Municipal Code Section 13.12.020.

a. The Term Highway 12/Flag City Corridor shall mean the area bounded by the White Slough Pollution Control Facility ("WSPCF") on the west, the City of Lodi on the East, ½ mile north of Highway 12 on the north and ½ mile south of the trunk sewer line connecting the City of Lodi to the WSPCF on the south.

b. Flag City Service Area shall mean all properties within the boundaries of County Service Area 31, as set forth in Exhibit A.

2. Terms of Connection. Any delivery of wastewater permitted pursuant to the MOU shall be subject to the following terms:

a. Permit: Flag City shall comply with the terms of a Discharge Permit to be issued by the City which will include but not be limited to limitations on maximum flow, BOD, ph, TDS and suspended solid concentrations and prohibitions on discharge of hazardous waste in conformance with the City's NPDES Permit. The terms of this Discharge Permit will be no more stringent than those required under the City's NPDES permit. However, City may change the terms of the discharge permit without notice if necessary to comply with State or Federal requirements.

b. Volume: The intent of this MOU is to provide sewer treatment services to the properties within the Flag City Service Area boundaries, as set forth in Exhibit A. Current volume of wastewater is 0.11 MGD (annual average). Estimated volume at build-out of the Flag City Service Area is .19 MGD (annual average). Flag City shall not exceed .19 MGD annual average without negotiating a tax-sharing agreement with the City of Lodi for all new development contributing to the increased flow. In all events, the volume of wastewater shall not exceed 0.21 MGD (annual average).

c. Rate/Surcharge: Flag City's charge for treatment will be as established by the City for its high strength customer users plus a 35 percent surcharge.

d. Capacity Charge: Flag City shall pay a one-time capacity charge based on the then-current rates for new City development at the time of connection. (These charges are adjusted annually.) Additional capacity charges at the current City rates will apply for each increment of effluent over the amount initially paid. Capacity charge reductions or credits may be granted for steps taken by Flag City to minimize impacts to City's overall treatment plant capacity through pre-treatment, off-peak delivery, or other mutually agreed strategies.

e. Administrative Charge: County shall pay City $250,000 as a onetime administrative charge upon the execution of this MOU and fulfillment of section 8 below.

f. Flag City will be solely responsible for all costs associated with installing a pipeline ("Collection Facilities") to connect to Lodi's Waste Water Treatment Plant.

g. City will bill for its services directly to Flag City and not to individual customers. Annual billing will begin with commencement of flow to the City's facility and will be billed in advance for a twelve (12) month period, based on estimated flow and strength. Subsequent annual billings Will be based on actuals for the prior twelve (12) months. Flag City will pay all invoices within 30 days of the date of the invoice.

h. Neither County nor Flag City will knowingly allow any person or entity to discharge to its Collection Facilities whose property is outside the Flag City Service Area, without prior City approval, which City may withhold in its absolute discretion. In the event County or Flag City violate the terms of this paragraph, the responsible party shall have three months from receipt of written notice of the violation to cure the violation without penalty. Thereafter, Flag City shall pay a 100 percent surcharge on Flag City's then current daily rate until cured.

i. Working cooperatively with City staff, Flag City will develop an application for connection to its Collection Facilities and require that all future applicants submit responses to questions designed to elicit their facilities compliance with the goals contained in this MOU and the discharge permit issued by City to Flag City. Flag City will copy City with all applications so submitted within 5 business days of receipt.

j. County represents that it is its existing policy that areas in the Highway 12/Flag City Corridor will only be approved for development to the extent they are consistent with the County's goals and policies set forth in this MOU.

k. Business Improvement District: Pursuant to California Streets and Highways Code Section 36521.5, County hereby consents to the inclusion of County Service Area No. 31 in the Lodi Tourism Business Improvement District codified in Lodi Municipal Code Section 12.07 et seq. *City* shall be solely responsible for the implementation and collection of any such tax and/or fee associated with the inclusion of the District and County's consent is limited to allowing City to follow proper procedures for implementation and collection of such fee and or tax.

l. District Expansion: County agrees that it will not expand the boundaries of the Flag City Service Area in a manner that results in the need for additional City sewer capacity, without the express written consent of City, which City may withhold In its absolute discretion. County and City agree that a minimum condition for this approval will be entry of a tax-sharing agreement for all property added to the service area

m. Design Guidelines: Working cooperatively with *City* staff, County will develop design guidelines for all new construction within County Service Area No. 31, for adoption through applicable land-use hearing processes.

3. Reimbursement. County shall reimburse the City for all costs incurred by the *City* in connection with the project. The City will provide County with an estimate of these costs in advance of connection. County shall deposit the estimate with the City within 30 days of receiving the estimate. City will bill all costs against the deposit. In the event the deposit is exceeded, County shall pay the difference to the City within 30 days of notice. Any excess will be refunded to County within 30 days.

4. Relationship of Parties.

a. It is understood that the relationship between the parties is an MOU relationship between public agencies and not an agency; and nothing herein shall be construed to the contrary.

b. The Parties agree that nothing contained herein, or in any document executed in connection herewith, shall be construed as making the parties joint venturers or partners,

c. This MOU is made and entered into for the sole protection and benefit of the parties and their successors and assigns. No other person, including but not limited to the residents (past, current, anticipated or future) of County Service Area No. 31, or developers or owners proposing projects within or outside the boundaries of County Service Area 31, shall have any right of action based upon

any provision in this MOU. Moreover, this MOU creates no rights for any property owner to obtain sewer service directly from the City of Lodi.

5. Notices. All notices required or provided for under this MOU shall be in writing and delivered in person or sent by certified mail, postage prepaid, return receipt requested. to the principal offices of the City and Flag City and its representative and Flag City's successors and assigns. Notice shall be effective on the date it is delivered in person, or the date when the postal authorities indicate the mailing was delivered to the address of the receiving party indicated below:

Notice to City: City of Lodi
City Manager
221 West Pine Street
Lodi, CA 95240

Notice to Flag City: CSA 34
Director of Public Works
P.O. Box 1810
Stockton, CA 95201

Notice to County: San Joaquin County
County Administrator
Courthouse - 222 E. Weber Avenue
Stockton, CA 95202

6. Indemnification. Defense and Hold Harmless.

a. County and Flag City agree to and shall indemnify, defend and hold the City, its Council members, officers, agents, employees and representatives harmless from liability for damage or claims of damage, for personal injury, including death, and claims for property damage which may arise from or relate to this MOU.

b. With respect to any action challenging the validity of this MOU or any environmental, financial or other documentation related to approval of this MOU, County and Flag City further agree to defend, indemnify, hold harmless, pay all damages, costs and fees, if any incurred to either the City or plaintiff (s) filing such an action should a court award plaintiff(s) damages, costs and fees, and to provide a defense for the City in any such action.

7. Environmental Documentation. County shall, at its sole cost and expense, perform all environmental review required by the California Environmental Quality Act or other applicable environmental law or regulation.

8. Bindina Effect of Agreement. The parties acknowledge that this MOU may be subject to environmental review and is subject to the Lodi City Council revising its wastewater ordinance to permit the discharge contemplated in this MOU. The terms of this MOU will, therefore, only take effect if any necessary environmental approvals are obtained and if the Lodi City Council makes the necessary ordinance revisions.

APPENDIX D

Operation and Maintenance Program Documents

Appendix D includes the following:

D-1 City of Lodi Sewer Map Grid System

D-2 Maintenance Cleaning Schedule

D-3 Closed Circuit Television Video Report

D-4 Standard Operating Procedure (SOP)

D-5 CWEA Certification Handbook

D-6 Equipment Inventory List

D-7 Critical Replace Parts List (to be included at a later date)

D-8 Technical Memorandum O&M Program *SSMP* Audit-Rehabilitation and Replacement Plan

Collection System Maintenance Certification

2009

Candidate

Handbook

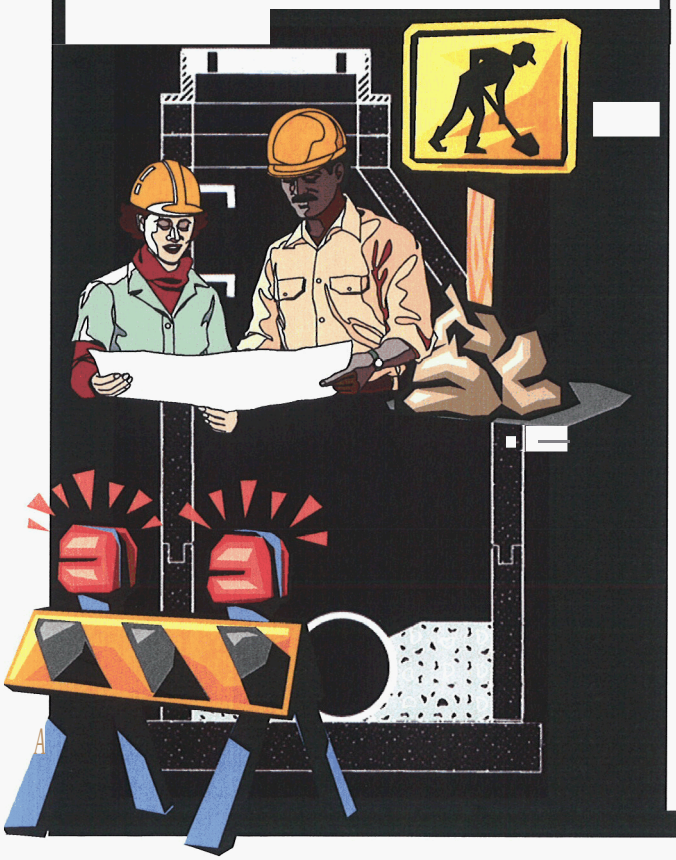

This booklet contains...

- Subject matter for the Collection System Maintenance tests
- Education and experience requirements
- Selected study references
- Certification policies

Collection System Maintenance

2009
Candidate Handbook

This handbook contains information about the Collection System Maintenance certification program. Please read this entire handbook to become familiar with certification procedures and policies. As a certificate applicant, you are responsible for knowing the contents of this handbook. If you have any questions please contact your Local Section Chair (listed in the TCP Application) or the CWEA office at 510-**382-7800.**

Statement of Non-Discrimination Policy

CWEA does not discriminate among applicants on the basis of age, gender, race, religion, national origin, disability, sexual orientation or marital status.

Copyright © 2007 by the **California Water Environment Association**

California Water Environment Association
Technical Certification Program
7677 Oakport Street, Suite 600
Oakland, CA 94621

phone: 510-382-7800
fax: 510-382-7810
web: www.cwea.org

Contents

Introduction **2**
The California Water Environment Association 2
The Technical Certification Program 2
Important Information **2**
The Certification Process 2
Code of Ethics 2
Test Administration and Admiuion 2
Test Design and Format 3
Test Scoring 3
Test Rescheduling and Cancellation 3
Item Appeals 3
Test Result Notification 3
Issue of Certificate/Wallet Cards 4
Renewal of Certification/Re-Certification 4
Accommodations For Those With Physical or Learning Disabilities 4
Grade I Collection System Maintenance **5**
Eligibility Criteria for Taking the Test 5
Essential Duties 5
Complexity of Test Questions 5
Test Content Areas 6
Grade II Collection System Maintenance **7**
Eligibility Criteria for Taking the Test 7
Qualifying With Your Education
Essential Duties 7
Complexity of Test Questions 8
Test Content Areas 8
Grade III Collection System Maintenance **9**
Eligibility Criteria for Taking the Test 9
Qualifying With Your Education 9
Essential Duties 9
Complexity of Test Questions 10
Test Content Areas 10
Grade IV Collection System Maintenance **11**
Eligibility Criteria for Taking the Test 11
Qualifying With Your Education 11
Essential Duties 11
Complexity of Test Questions 12
Test Content Areas 12
SAMPLE TEST QUESTIONS **13**
SELECTED REFERENCES **15**
PREPARING FOR YOUR TEST **17**
Determining Your Preparedness 17
Using the Selected References 17
Using the Test Content Areas as a Guide to Your Study 17
FREQUENTLY ASKED QUESTIONS **17**

Introduction

The California Water Environment Association

CWEA's mission is to enhance the education and effectiveness of California wastewater professionals through training, certification, dissemination of technical information, and promotion of sound policies to benefit society through protection and enhancement of the water environment.

CWEA is a California Nonprofit Corporation and is a Member Association of the Water Environment Federation and a member of the National Organization for Competency Assurance.

The Technical Certification Program

The Technical Certification Program (TCP) was created to offer multilevel technical certification for individuals employed in the water quality field. Tests are written by vocational specialists and administered throughout the year in six different disciplines: Biosolids, Collection System Maintenance, Environmental Compliance Inspection, Laboratory Analyst, Plant Maintenance (Electrical/ instrumentation and Mechanical Technologist), and Industrial Waste Treatment Plant Operator.

CWEA first offered a certification program for operators of wastewater treatment plants in 1937. The program was administered by CWEA until 1973 when the State of California assumed responsibility for the program. During those 36 years, CWEA awarded 3915 operator certificates.

In 1975 the first committees were formed to establish a new voluntary certification program for water quality professionals specializing in disciplines other than plant operation. Eventually, the Voluntary Certification Program (VCP) emerged with specialized certificate programs for Biosolids Land Application Management, Collection System Maintenance, Plant Maintenance, Environmental Compliance Inspection, and Laboratory Analyst. The first of the new certifications were given in April of 1976. In the 1980s two more disciplines were added: Electrical/Instrumentation, and Industrial Waste Treatment Plant Operator.

Today CWEA offers certification in six different vocational programs with a total of 23 different certifications. About 2,000 certification applications are processed every year and over 5,500 certificates are currently held by individuals in California, Michigan, Hawaii, and Missouri.

The Certification Process

To become certified, ***all applicants*** must complete the Application For Technical Certification, pay the application fee, have appropriate experience/ education, and pass the computer-based test. Application instructions and fee schedules are listed on the application.

Important Information

After applications are received at the CWEA office, applicant information is compiled in the certification database. Acceptance letters are then mailed to all applicants. The experience and education given on the application is then reviewed by CWEA staff. If the application is approved, then the applicant will receive an acceptance letter. If the application is rejected, the applicant will be notified and may be asked to supply more information if warranted. After completing the test, applicants are sent official test-results. Those who pass the exam will then be mailed certificates and blue wallet cards.

Code of Ethics

The Code of Ethics is intended to reflect the standards and behavior that California Water Environment Association certificate holders and applicants expect of each other as they perform their work protecting public health and the environment and that reaffirm the value of holding a CWEA certificate. The purpose of the Code of Ethics is to ensure public confidence in the integrity and service of professional water quality workers while performing their duties.

All California Water Environment Association certificate holders and applicants are expected to meet the following standards of professional conduct and ethics:

1. To protect public health, themselves, their co-workers, property, and the environment by performing the Essential Duties of the CWEA certified vocation safely and effectively, and complying with all applicable federal, state and local regulations.
2. To represent themselves truthfully and honestly throughout the entire certification process.
3. To adhere to all test site rules and make no attempt to complete the test dishonestly or to assist any other person in doing so.
4. To refrain from activities that may jeopardize the integrity of the Technical Certification Program.

Test Administration And Admission

Testing Dates and Sites: Tests are given throughout the year. Applicants eligible for the test will receive an acceptance letter and instructions on how to schedule their exam.

Testing Window	Test Dates	Application Deadline
Spring	April 1 - June 30, 2009	February 27
Summer	July 1 - September 30, 2009	May29
Fall	October 1 - December 31,2009	August 31
Winter	January 1 - March 31, 2010	November 30

CWEA also provides reasonable accommodations for those with physical or learning disabilities (See following page: "Accommodations For Those With Physical or Learning Disabilities").

Test Site Admission: Certificate candidates are required to show at least one valid government issued photo identification (State driver's license or ID, or passport). Only after positive identification has been made by the testing proctor may a candidate begin the exam. Candidates do not require to show their acceptance letters to enter the test site.

Test Security: Beginning January 2009, all exams will be computer-based format. No reference material, laptop computers, or cameras are allowed in the test site. Candidates will have access to an onscreen calculator, however, examinees are welcome to bring pre-approved calculator (visit www.cwea.org/cbt). Candidates are not allowed to take any notes from the test site. Candidates who violate test site rules may be asked to leave the site and may be disqualified from the test. All violations of test security will be investigated by CWEA and appropriate action will be taken. There are no exceptions to this policy.

Test Design And Format

Test Design: All certification tests are designed to test knowledge and abilities required to perform *Essential Duties* with minimal acceptable competence.The *Essential Duties* and *Test Content Areas* for each certification were determined by a job analysis and *meta-analysis* of job specifications by two independent psychometric consulting firms.
The studies gathered data from onsite visits of over 31 water and wastewater agencies, interviews with 110 water and wastewater professionals, and analysis of more than 300 job specifications. All research was conducted under the guidance of the Technical Certification Program Committee, vocational sub-committees, and CWEA staff. All test questions are designed to measure at least one area of knowledge or ability that is required to perform an essential duty.

Test Delivery Mechanism: All tests are computer-based format and are written in the English language only.

Test Format: All Collection System Maintenance tests are given completely in the multiple choice format (see *Sample Test Questions* in this booklet for examples). The multiple choice format is considered the most effective for use in standardized tests. This objective format allows a greater coverage in content for a given amount of testing time and improves competency measurement reliability. Multiple choice questions range in complexity from simple recall of knowledge to the synthesis and evaluation of the subject matter.

Test Scoring

Scoring Method: All tests are electronically scored by CWEA. The overall test score will determine if you pass or fail the test. Generally, the minimum score required to pass the test is 75% (this passing score may be adjusted downward depending on the difficulty level of each particular test). The minimum passing score is determined by the modified Angoff Method. When taking your test it is recommended that you try your best to score as high as possible. Do not try to target the minimum passing score.

How Passing Scores Are Set: Each time a certification test is given the questions are changed resulting in a different test form. Since each form has different questions the difficulty level of the test may not be the same from form to form. The passing score is developed as an overall estimate of minimal acceptable competence in the Test Content Areas by subject matter and testing experts. Passing scores are determined by an overall passing score, not by performance on individual Test Subject Areas, and are independent of other candidate's scores. Partial credit will not be awarded for any test item answered incorrectly.

Test Rescheduling and Cancellation Instructions

Reschedule your Testing Window

To reschedule your application you must submit a written request (a letter stating that you wish to reschedule) to the adjacent (next) window once without a fee. A $40 administrative fee is required to reschedule your application again to the third window. There are no exceptions to this policy.

Reschedule your Test Appointment

If you already have a scheduled exam with our testing administrator, Pearson VUE (PV) , and wish to reschedule your appointment, you must contact (PV) one (1) business day in advance to avoid losing your exam fee.

Cancel your Application

To cancel your application you must submit a written request (a letter stating you wish to cancel your application) to CWEA. The written request must be received at the CWEA office before the testing window begins. Full refunds, less a $40 administrative fee, will be made within 4 weeks after the scheduled date.

Item Appeals

Candidates who wish to appeal a specific test item must do so during the test by completing *Candidate Comment Review Screen* during the exam. Candidate comments will be evaluated and appropriate adjustments will be made to the test content. Candidates submitting comments will not be contacted in regards to the appeal.

Test Result Notification

Exam results are routinely mailed to certificate candidates approximately 4 weeks after the exam date. No results are given over the phone, via fax or email. All results are confidential and are only released to the certificate candidate. There are no exceptions to this policy.

Issue of Certificate/Blue Wallet Card

Certificates and blue wallet cards will be issued to all candidates who pass the exam. Certificates and blue wallet cards are mailed about two to three weeks after result notifications have been mailed.

Renewal of Certification

All certificates must be renewed annually. The first renewal is due one year from the last day of the month in which the certification exam was held. Certificate renewals less than one year past due are subject to the renewal fee plus a penalty fee of 100 percent of the renewal fee. Certificates more than one year past due will need to retest to regain certification. Renewal notices are mailed to certificate holders two months before the due date. It is the responsibility of the certificate holder to ensure that his or her certificate(s) remains valid.

Re-Certification:

CWEA Certificate holders shall be required to renew certificates annually, and shall be required to provide evidence of completion of 12 contact hours of continuing education requirements every two years. For more information, visit CWEA's website: www.cwea.org.

Accommodations For Those With Physical or Learning Disabilities

In compliance with the Americans with Disabilities Act, special accommodations will be provided for those individuals who provide CWEA with a physician's certificate, or its equivalent, documenting a physical or psychological disability that may affect the individual's ability to successfully complete the certification examination. Written requests for special accommodations must be made no later than 3 weeks before the examination date.

Grade I Collection System Maintenance

Collection System Maintenance Grade I Certification is designed to demonstrate competency at the entry and basic working level. More specifically, Grade I certification implies competence in the knowledge, skills and abilities required to perform the *Essential Duties* of an entry Collection System Maintenance Technologist.

Eligibility Criteria For Taking The Test

There are no experience or education requirements for Grade I certification. Completing the Application for Technical Certification, paying the appropriate application fee, and passing the examination are the only requirements. It is, however, *recommended* that Grade I candidates have at least one year of experience working as an Collection System Maintenance Technologist performing the *Essential Duties* listed below. Many candidates without the recommended experience have difficulty successfully completing the computer-based test.

Essential Duties Of The Grade I Collection System Maintenance Technologist

Individuals certified as Grade I Collection System Maintenance Technologists are expected to possess acceptable competency when performing the tasks that are necessary for entry level Collection System Maintenance Technologists. These necessary tasks are known as the *Essential Duties.* The certification test measures knowledge, skills and abilities required to perform the *Essential Duties.*

Essential Duties for Grade I

1. Participates in inspecting, cleaning, maintaining, constructing and repairing of wastewater collection systems, utilizing a variety of mechanical or specialized equipment
2. Assists with pump station inspections, records instrument readings and makes minor adjustments to keep flow steady
3. Performs a variety of manual tasks including the lifting, carrying and removal of heavy loads including materials, equipment and debris
4. Inspects and maintains easements, some of which may be remote or difficult to access
5. Participates in excavating, shoring and re pairing the collection system, including damaged pipe, manholes and casting adjustments
6. Breaks, cuts and restores concrete and paved surfaces using jackhammers, concrete saws, etc.
7. Prepares, inspects, and maintains vehicles for use; ensures vehicles are in proper operating condition and arranges for maintenance when required
8. Ensures that tools and equipment are in proper operating condition for daily use and arranges for maintenance when required
9. Participates in the maintenance and repair of wastewater collection system lift stations and components
10. Completes accurate, legible and timely records/data of work performed
11. Participates in maintaining proper traffic safety controls at work sites to move traffic safely and efficiently around work site
12. Responds to public inquiries in a courteous manner and provides information appropriate to the area of assignment
13. Adheres to safe work practices and abides by all applicable regulations, policies and procedures
14. Reads and interprets collection system maps to determine basic flow characteristics and construction details
15. Participates in the containment and cleanup of wastewater spills
16. Stays abreast of new trends and innovations in the field of wastewater collection system operation and maintenance
17. Participates in confined space entries

Complexity Of Test Questions

At the Grade I level, certificate candidates are expected to have basic knowledge of the job and the ability to safely perform the *Essential Duties* listed above. Examinees will have to answer multiple choice questions that test knowledge, comprehension, and application of the subject matter. The complexity of the questions will range from basic recall of previously learned material and the ability to understand the meaning of the subject matter, to being able to apply knowledge to new situations.

Test Content Areas

The following list is an outline of *Test Content Areas.* Each content area is a Knowledge, Skill, or Ability that is required to perform the *Essential Duties* listed above. Since all of the Knowledge, Skills, or Abilities are required to perform the *Essential Duties* they are all equally important in the demonstration of acceptable competency. Thus, all of the content areas listed below are equally weighted on the test.

Test Content Areas for Grade I

Knowledge of:

101. Operations, services, and activities of a wastewater collection system operations and maintenance program

102. Methods and techniques of recording instrument readings and related measuring devices

103. Methods and techniques of traffic control

104. Operation and proper application of collection system maintenance equipment and tools

105. Occupational hazards and standard safety practices

106. Applicable codes, regulations, policies, and procedures

107. Underground Service Alert (USA) markings

Skill to:

108. Establish and maintain cooperative relationships with those contacted in the course of work

109. Communicate accurately, clearly, and concisely: in writing, orally, and electronically, in the English language

110. Read and interpret essential technical information including maps and drawings

111. Perform basic mathematical calculations

Ability to:

112. Perform operation, maintenance, and repair of the wastewater collection system

113. Operate a variety of specialized equipment including vehicles and collection system maintenance devices, hand and power tools, air compressors and jackhammers

114. Perform basic facilities and grounds maintenance

115. Understand and follow oral and written instructions

116. Learn more difficult collection systems construction, maintenance, and repair techniques

117. Properly lift and carry heavy loads in a variety of difficult conditions

118. Obtain appropriate licenses and certifications

119. Work in hazardous, difficult, and disagreeable conditions

Grade II Collection System Maintenance

Combination	EDUCATION & CERTIFICATIONS	+ EXPERIENCE
A	None	4 full-time years in Collection System Maintenance
B	Hold Grade I CSM Certificate for 1 yr.	2 full-time years in Collection System Maintenance
C	AA/AS degree in a related field	2 full-time years in Collection System Maintenance
D	Hold a BA/BS, or higher, degree in a related field	1 full-time year in Collection System Maintenance

Qualifying With Your Education

Holding a college degree, or its equivalent, in a field related to your vocation will reduce the number of years required for your test (see the table above). Your degree must be in a field that is related to the certificate for which you are applying. If you are uncertain if your degree is related to your vocation you should still include your degree information in your application. The Technical Certification Program Committee will determine if your degree qualifies. If it does not, you will be accepted for the next highest grade level for which you qualify. Associate's and Bachelor's degrees in technical fields are usually accepted. Degrees are evaluated on a case-by-case basis upon receipt of the application. College credit without a degree is not accepted unless it can be demonstrated that the credit is equivalent to a degree.

Essential Duties Of The Grade II Collection System Maintenance Technologist

Individuals certified as Grade II Collection System Maintenance Technologists are expected to possess acceptable competency when performing the tasks that are necessary for skilled or journey level Collection System Maintenance Technologists. These necessary tasks are known as the *Essential Duties.* The certification test measures knowledge, skills and abilities required to perform the *Essential Duties.*

Essential Duties for Grade II

1. Performs, trains and directs the duties listed for Collection System Maintenance Grade I
2. Inspects, troubleshoots and maintains proper collection system operation using advanced techniques and instruments
3. Conducts confined space entries
4. Performs maintenance and repair of waste-water collection system
5. Provides information and reports on activities as required
6. Provides assistance to individuals, agencies and private organizations with underground service alert (USA) markings, utilities and manholes
7. Plans routine traffic safety at worksites and performs non-routine traffic control under general supervision
8. Resolves routine complaints in an efficient and timely manner
9. Monitors crew performance to ensure adherence to safe work practices and compliance with all applicable regulations, policies and procedures
10. Participates in the development and promotion of safe work practices and procedures

Complexity Of Test Questions

At the Grade II level, certificate candidates are expected to have the knowledge, skill and ability to safely and effectively accomplish most of the *Essential Duties* listed above. Grade II candidates are also expected to be familiar with the Grade I Test Content Areas. Examinees will have to answer

multiple choice questions that test comprehension, application and analysis of the subject matter. The complexity of the questions will cover the ability to basically understand the subject matter; to recall and apply principles, ideas, and theories; and to break down ideas and theories into their constituent parts.

Test Content Areas

The following list is an outline of Test Content Areas. Each content area is a knowledge, skill, or ability that is required to perform the *Essential Duties* listed above. Since all of the knowledge, skills, or abilities are required to perform the *Essential Duties* they are all equally important in the demonstration of acceptable competency. Thus, all of the content areas listed below are equally weighted on the test. Candidates should also be thoroughly familiar with the Grade I Collection System Maintenance Technologist *Test Confenf Areas.*

Knowledge of

Test Content Areas for Grade II

200. Knowledge, skill and ability identified on the Test Content Specifications for Collection Systems Grade I

201. Operations, services and activities of a wastewater collection system operations and maintenance program

202. Methods and techniques of wastewater collection system inspection, maintenance and repair

203. Operation and characteristics of collection system maintenance equipment and tools including heavy equipment, CCTV inspection, and monitoring devices

204. Methods and techniques, tools and materials used in the maintenance and repair of wastewater collection systems and lift stations

205. Safe working practices pertinent to wastewater collection system maintenance, repair, and construction

206. Occupational hazards and standard safety practices

207. Applicable codes, regulations, policies, and procedures

Skill to:

208. Establish and maintain effective relationships with those contacted in the course of work

209. Communicate accurately, clearly, and concisely: in writing, orally, and electronically, in the English language

210. Perform simple algebra and geometrical calculations

Ability to:

211. Perform maintenance and repair of the wastewater collection system

212. Operate a variety of collection system maintenance construction equipment such as air compressors, compactors, vibrators, jackhammers, tampers, cutters and CCTV inspection and monitoring devices

213. Work independently in the absence of direct supervision

214. Understand and follow oral and written instructions

215. Learn new and advanced collection systems construction, maintenance, and repair techniques

216. Effectively assess and interpret situations and conditions and apply independent judgement

217. Operate a variety of heavy construction equipment, such as backhoes, loaders, dozers, and dump trucks

Grade III Collection System Maintenance

Collection System Maintenance Grade III Certification is designed to demonstrate competency at the lead or advanced technical level. More specifically, Grade III certification implies competence in the knowledge, skills and abilities required to perform the *Essential Duties* of a lead or advanced Collection System Maintenance Technologist.

Eligibility Criteria For Taking The Test

The basic requirement is six years of full-time work in Collection System Maintenance. You may also qualify by having four years of experience and holding a Collection System Maintenance Grade II Certificate for two years, **OR** having four years of full-time experience and holding an Associate's degree in a related field, **OR** having three years of full-time experience and holding a Bachelor's, or higher, degree in a related field.

Eligibility criteria are summarized in the table below. You may qualify by meeting either Education/ Experience Combination **A, B, C,** or **D.** If you do not meet any of the combinations of experience and education. then you do not qualify for Grade III:

Combination	EDUCATION& CERTIFICATIONS	EXPERIENCE
A	None	6 full-time years in Collection System Maintenance
B	Hold Grade II CSM Certificate for 2 years.	4 full-time years in Collection System Maintenance
C	Hold an Associate's degree in a related field	4 full-time years in Collection System Maintenance
D	Hold a BA/BS, or higher, degree in a related field	3 full-time years in Collection System Maintenance

Using Your Education To Help Qualify For The Test

Holding a college degree, or its equivalent, in a field related to your vocation will reduce the number of years required for your test (see the table above). Your degree must be in a field that is related to the certificate for which you are applying. If you are uncertain if your degree is related to your vocation you should still include your degree information in your application. The Technical Certification Program Committee will determine if your degree qualifies. If it does not, you will be accepted for the next highest grade level for which you qualify. Associate's and Bachelor's degrees in technical fields are usually accepted. Degrees are evaluated on a case-by-case basis upon receipt of the application. College credit without a degree is not accepted unless it can be demonstrated that the credit is equivalent to a degree.

Essential Duties Of The Grade III Collection System Maintenance Technologist.

Individuals certified as Grade III Collection System Maintenance Technologists are expected to possess acceptable competency when performing the tasks that are necessary for lead or advanced level Collection System Maintenance Technologists. These necessary tasks are known as the *Essential Duties.* The certification test measures knowledge, skills and abilities required to perform the *Essential Duties.*

Essential Duties for Grade III

1. Plans, coordinates and reviews the performance of the duties of Collection System Maintenance Grade I and Grade II
2. Coordinates with other utilities, the public, agencies and private organizations to address complex or non-routine issues
3. Participates in the evaluation of the performance of the wastewater collection system such as energy efficiency, material costs and preventive/predictive maintenance programs
4. Participates in the development and implementation of training of assigned employees in their areas of work in wastewater collection system inspection and repair methods, techniques, equipment and safety
5. Verifies the work of assigned employees for accuracy, proper work methods, techniques and compliance with applicable standards and specifications
6. Monitors and inspects the work of contractors for a variety of construction or maintenance projects
7. Analyzes and reviews system data to recommend priorities, schedules and workload performance measures
8. Develops and directs the execution of complex or non-routine traffic safety plans
9. Responds to exceptional and/or non-routine public inquiries in a courteous manner and participates in the development of formal reports and responses to the media
10. Participates in, ensures the development of, and adherence to the safety program
11. Participates in fact-gathering to respond to liability claims

12. Participates in investigations into potential wrongdoing or policy violations

13. Attends and participates in professional group meetings; stays abreast of new trends and innovations in the field of wastewater collection system operation & maintenance.

Complexity Of Test Questions

At the Grade III level, certificate candidates are expected to have the knowledge, skill and ability to safely and effectively accomplish and coordinate complex tasks as listed in the *Essential Duties* above. Grade III candidates are also expected to be familiar with the Grade I and II Collection System Maintenance Technologist knowledge, skills and abilities. Examinees will have to answer multiple choice questions that test application, analysis, and synthesis of the subject matter. The complexity of the questions will cover the ability: to abstract in particular and concrete situations; to clarify and organize theories and ideas; and to put facts together to form a new solution.

Test Content Areas

The following list is an outline of Test Content Areas. Each content area is a Knowledge, Skill, or Ability that is required to perform the *Essential Duties* listed above. Since all of the Knowledge, Skills, or Abilities are required to perform the *Essential Duties* they are all equally important in the demonstration of acceptable competency. Thus, all of the content areas listed below are equally weighted on the test. Candidates should also be thoroughly familiar with the Grade I and II Collection System Maintenance *Test Content Areas.*

Test Content Areas for Grade III

Knowledge of

300. Knowledge, skill and ability identified on the Test Content Specifications for Collection Systems Grades I and II

301. Operations, services, and activities of a wastewater collection system operations and maintenance program

302. Principles of leadership, supervision, and training

303. Methods and techniques of wastewater collection system inspection, predictive/preventive maintenance and repair

304. Operation and characteristics of collection system maintenance equipment and tools.

305. Methods and techniques, tools and materials used in the maintenance and repair of wastewater collection systems

306. Procedures, methods, tools, and equipment used in the operation of motors, pumps, controls, and instrumentation

307. Safe working practices applicable to wastewater collection system maintenance, repair and construction

308. Pipeline and manhole design and construction

309. Occupational hazards and safety practices including the management of exceptional circumstances

310. Office equipment including computers and supporting word processing, spreadsheets, and databases

311. Applicable codes, regulations, policies and procedures

Skill to:

312. Establish and maintain cooperative working relationships with those contacted in the course of work

313. Communicate accurately, clearly, and concisely: in writing, orally, and electronically, in the English language

314. Perform advanced algebra, geometry, statistical analysis, including cut sheet problems

Ability to:

315. Lead and train maintenance and repair staff. Includes scheduling and assigning personnel and the use of materials and equipment to assure desired quality and quantity of work

326. Work cooperatively with co-workers; identify and minimize conflict

317. Compute time requirements, labor, materials, and equipment needed for various jobs

318. Plan, organize, and schedule training

319. Inspect and diagnose operating problems on pumps, electrical motors, and automatic control systems

320. Supervise and direct the most difficult collection system maintenance and repair tasks

321. Work independently under general supervision

322. Competently inspect the work of contractors and staff

323. Operate a variety of collection system maintenance equipment and tools

324. Understand, follow and provide oral and written instructions

325. Effectively assess and interpret situations and conditions and apply independent judgment

Grade IV Collection System Maintenance

Collection System Maintenance Grade IV Certification is designed to demonstrate competency at the program manager level. More specifically, Grade IV certification implies competence in the knowledge, skills and abilities required to perform the *Essential Dufies* of a management level Collection System Maintenance Technologist.

Eligibility Criteria For Taking The Test

The basic requirement is eight years of full-time work in Collection System Maintenance. You may also qualify by having six years of experience and holding a Collection System Maintenance Grade III Certificate for two years, **OR** having six years of full-time experience and holding an Associate's degree in a related field, **OR** having five years of full-time experience and holding a Bachelor's, or higher, degree in a related field. All Grade IV candidates must also demonstrate at least one year of experience supervising the work of others.

Eligibility criteria are summarized in the table below. You may qualify by meeting either Education/ Experience Combination **A, B, C,** or **D.** If you do not meet any of the combinations of experience and education, then you do not qualify for Grade IV:

Combination	EDUCATION & CERTIFICATIONS +	EXPERIENCE
A	None	8 years in Collection System Maintenance with one of those years supervising
B	Hold Grade III CSM certificate for 2 years.	6 years in Collection System Maintenance with one of those years supervising
C	Hold an AA/AS, or higher, degree in a related field	6 years in Collection System Maintenance with one of those years supervising
D	Hold an Bachelor's, or higher, degree in a related field	5 years in Collection System Maintenance with one of those years supervising

Qualifying With Your Education

Holding a college degree, or its equivalent, in a field related to your vocation will reduce the number of years required for your test (see the table above). Your degree must be in a field that is related to the certificate for which you are applying. If you are uncertain if your degree is related to your vocation, you should still include your degree information in your application. The Technical Certification Program Committee will determine if your degree qualifies. If it does not, you will be accepted for the next highest grade level for which you qualify. Associate's and Bachelor's degrees in technical fields are usually accepted. Degrees are evaluated on a case-by-case basis upon receipt of the application. College credit without a degree is not accepted unless it can be demonstrated that the credit is equivalent to a degree.

Essential Duties Of The Grade IV Collection System Maintenance Technologist

Individuals certified as Grade IV Collection System Maintenance Technologists are expected to possess acceptable competency when performing the tasks that are necessary for management level Collection System Maintenance. These necessary tasks are known as the *Essential Dufies.* The certification test measures knowledge, skills and abilities required to perform the *Essential Duties.*

Essential Duties for Grade IV

1. Administers and manages the performance of the duties of Collection System Maintenance Grade I, Grade II and Grade III
2. Responsible for all services and activities associated with the operation, maintenance and repair of the wastewater collection system
3. Manages the development and implementation of goals, objectives and policies for the wastewater collection program
4. Directs and supports supervisors and staff to ensure high performance in a customer service-oriented work environment that supports achieving desired goals and objectives
5. Evaluates the performance of the wastewater collection system such as staffing levels, predictive/preventive maintenance programs, energy efficiency and material costs
6. Plans, directs, coordinates, prioritizes and reviews the work plan for the collection system
7. Selects, motivates and evaluates personnel; works with employees to achieve performance goals and objectives; implements disciplinary procedures; conducts general labor relations activities
8. Develops, implements and oversees a comprehensive equipment selection and maintenance program
9. Coordinates wastewater collection system activities with other divisions, outside agencies

and organizations. Negotiates and resolves sensitive and controversial issues

10. Provides responsible and complex technical support to upper management and prepares and presents staff reports, including organizational studies

11. Originates and administers the work of contractors/consultants/engineers for a variety of construction or maintenance projects

12. Responsible for the development and administration of safety training programs for wastewater collection system staff and ensures compliance with safe working practices, rules and regulations

13. Responsible for the development and administration of assigned employees in wastewater collection system inspection, repair methods, techniques and equipment

14. Oversees and participates in the development and administration of the wastewater collection system annual budget; tracks and forecasts resources needed for staffing, equipment, materials, and supplies; monitors and approves expenditures and implements adjustments

15. Initiates, develops and administers programs, policies, and procedures to ensure the safe and efficient operation of the wastewater collection system

16. Attends and participates in professional group meetings; stays abreast of new trends and innovations in the field of wastewater collection system operation and maintenance; ensures the availability of opportunities for all staff to participate in professional development

17. Responds to difficult and sensitive public inquiries in a courteous manner and develops formal reports and responses to the media

18. Reviews and responds to liability claims
19. Investigates potential wrongdoing or policy violations

Complexity Of Test Questions

At the Grade IV level, certificate candidates are expected to have the knowledge, skill and ability to administer, coordinate and manage complex programs described in the *Essential Dufies* above. Grade IV candidates are also expected to be familiar with the Grade I, II, and III Collection System Maintenance Technologist knowledge, skills and abilities. Examinees will have to answer multiple choice questions that test analysis, synthesis and evaluation of the subject matter. The complexity of the questions will cover the ability: to clarify and organize theories and ideas; to put together facts to form new solutions; to make managerial level judgements

Test Content Areas

The following list is an outline of *Test ConfenfAreas*. Each content area is a Knowledge, Skill, or Ability that is required to perform the *Essential Dufies* listed above. Since all of the Knowledge, Skills, or Abilities are required to perform the *Essenfial Dufies* they are all equally important in the demonstration of acceptable competency. Thus, all of the content areas listed below are equally weighted on the test. Candidates should also be thoroughly familiar with the Grade I, II, and III Collection System Maintenance *TesfConfenfAreas*.

Test Content Areas for Grade IV

Knowledge of:

400. Knowledge, skill and ability identified on the Test Content Specifications for Collection Systems Grades I, II, and III
401. Operational characteristics, services and activities of a wastewater collection system maintenance program
402. Operation and characteristics of collection systems maintenance equipment and tools
403. Methods and techniques, tools and materials used in the maintenance and repair of wastewater collection systems
404. Wastewater collection system inspection methods and techniques
405. Principles and practices of program development and administration
406. Principles and practices of budget preparation and administration.
407. Principles of leadership, supervision, training and performance evaluation
408. Principles of labor relations administration
409. Recent developments, current literature and sources of information related to wastewater collection
410. Office equipment including computers and supporting word processing, spreadsheets, databases and specialized computer software programs
411. Occupational hazards and general safety practices
412. Applicable codes, regulations, policies, and procedures

Skill to:

413. Establish and maintain cooperative relationships with those contacted in the course of work
414. Communicate accurately, clearly, and concisely: in writing, orally, and electronically, in the English language

415. Perform budget development, expenditure forecasting, statistical evaluation, and cost analysis

Ability to:

416. Manage, direct and coordinate the work of staff

417. Select, supervise, train, and evaluate staff

418. Oversee and direct the operations, services and activities of a wastewater collection system

419. Manage and administer inspection services or wastewater collection system projects

420. Read and interpret blueprints, construction drawings and specifications

421. Develop and administer goals, objectives and procedures

422. Interpret, explain, and enforce division policies and procedures

423. Develop and implement safety training programs

424. Prepare and administer program budget

425. Prepare clear and concise administrative and financial reports

426. Research, analyze, and evaluate new methods and techniques

427. Interpret and apply appropriate codes, regulations, policies, and procedures

428. Understand, follow and provide oral and written instructions

429. Effectively assess and interpret situations and conditions and apply independent judgment

Sample Test Questions

The following sample test questions are provided to help you become familiar with the multiple choice format. These questions reflect only a sample of the subject matter covered at each grade level.

For each question, choose the single most correct answer. An answer key is provided on page 14.

Grade I Collection System Maintenance

1. Operation and maintenance of a Wastewater Collection System means keeping the:

   a. power supply available.
   b. system in good operating condition.
   c. water flowing from the spigot.
   d. electrical equipment dry.

2. Upon arrival to a service request for a building lateral stoppage, you notice a constant flow coming up from the clean-out. The first thing you should do is:

   a. cap the clean-out and see if any sewage comes into the building.
   b. set up the hydro-cleaner at the downstream manhole.
   c. open the upstream manhole to see if it is full.
   d. make sure that water is not being used in the building.

3. In order to complete a sewer repair, the crew had to cut out a section of sidewalk 4 feet wide, 8 feet long and 4 inches thick. How many cubic yards of concrete are needed to restore the sidewalk?

   a. 3.5 cubic yards
   b. 0.39 cubic yards
   c. 9.6 cubic yards
   d. 0.96 cubic yards

Grade II Collection System Maintenance

1. A report of a clean-out cover missing in the side walk is routed to you. Which of the following would be the best response?

   a. Make a note and take care of it when you are in the area.
   b. Respond immediately and put a cone over it.
   c. Take care of it after lunch.
   d. Respond immediately and repair or replace the clean-out cover.

2. While conducting a video inspection, the camera becomes stuck. Which of the following would be the first step in solving this problem?

   a. Call for a backhoe and dig up the area where the camera is stuck.
   b. Disconnect the wires and close the manhole; return the following morning to see if it has freed itself.
   c. Attempt to dislodge the camera by using the tag line.

d. Attach pulling cable to a truck hitch and pull through the bad spot, then continue your inspection.

3. A new sewer line is installed using a bubble level. For every foot of pipe installed, the level measures a quarter (1/4) inch of fall. A quarter (1/4) inch of fall for every foot is equal to what percent?

a. 4%
b. 1.4%
c. 2%
d. 0.002%

Grade III Collection System Maintenance

1. The main advantage of using variable speed pumping equipment is that the pumping rate can be adjusted to meet:

a. head loss rate.
b. discharge rate.
c. inflow rate.
d. friction loss.

2. When preparing a lift station maintenance program, which of the following factors should be considered first?

a. Computer activity codes
b. Station I.D. codes
c. Equipment specifications
d. History of stoppages

3. A wet well is 115 feet long by 85 feet wide and has a water level of 18 feet. The flow is 22 million gallons a day. What is the detention time?

a. 76 minutes
b. 1 hour 26 minutes
c. 1 hour 43 minutes
d. 2 hours 26 seconds

4. Which characteristic is typical of workers who are high achievers in performing their jobs?

a. Seeking out problems rather than avoid them
b. Developing faster methods without seeking supervisorial advice
c. Resolving routine problems
d. Achieving mediocre results with abundant resources

Grade IV Collection System Maintenance

1. You receive an anonymous complaint that one of your maintenance vehicles is parked in a neighborhood and two employees are inside of the vehicle drinking alcohol. What steps, if any, should you take?

a. Call in all maintenance personnel and have everyone tested for drugs and alcohol.
b. Go out to the site and send the suspected employees home.
c. Suspend the employees until fact finding is complete.
d. Take another supervisor out to the site, observe employees, ask questions and investigate the circumstances.

2. One of your maintenance crews reports to you that a contractor working within your jurisdiction is pumping raw sewage into a nearby creek. Which of the following should you do first?

a. Tell your crew to ask the contractor to keep a record of how many gallons are pumped into the creek.
b. Take a police officer to the site, have the contractor arrested, and call the health department.
c. Have your crews contain the sewage in the creek, pump it back into a nearby sanitary sewer, and have the contractor let them know if any more sewage is to be pumped.
d. Go to the site, confirm the illegal discharge, advise the contractor to stop, take photos, take down names, and notify the health department.

3. Which of the following would be a detrimental effect of excessive infiltration and inflow?

a. Contamination of the ground water supply
b. Higher power costs for pump stations
c. Reducing storm water runoff
d. Reducing root intrusion into sanitary sewer lines

4. Which of the following would be a typical item in the Operating Budget?

a. Purchase of a new backhoe
b. A large sewer main replacement project
c. Purchase of daily materials and supplies
d. Reserve funding for future projects

Answer Key To Sample Test Questions

Question #	Grade I	Grade II	Grade III	Grade IV
1	b	d	c	d
2	d	c	c	d
3	b	c	b	b
4	—	—	a	c

Selected References

The following table lists references that may be useful when studying for the certification test. The table lists primary and supplementary study references. Primary study references are recommended as the best sources for studying for the certification test. Supplementary study references are recommended as sources that will help to further your understanding of the subject matter beyond the primary references.

For each reference a "P" indicates Primary reference and an "S" indicates a Supplementary reference. Check the Grade column that corresponds to the grade level you will be taking to determine if a reference is Primary or Supplementary. Blank boxes indicate that the reference is not appropriate for that grade level.

For information about obtaining these publications, use the contact information listed in the reference. If no phone number or website is listed, contact the publishing agency directly or contact your local library or bookstore.

This reference list is intended to assist certificate candidates in their preparation for the Collection System Maintenance Technologist certification test. Use of these references does not guarantee successful completion of the test. There may be other publications that may be helpful to candidates preparing for the test. CWEA encourages you to identify and utilize other resources in preparing for your test.

	GRADE			
Reference	**I**	**II**	**III**	**I**
"Operation and Maintenance of Wastewater Collection Systems", Volume I, Kenneth Kerri, Office of Water Programs, California State University Sacramento, 6000 J Street, Sacramento, CA. 95819-6025, (916) 278-6142. www.owp.csus.edu	P	P	P	P
"Collection System Maintenance Study Guide", Grades 1-4 (2001) CWEA (510) 382-7800 www.cwea.org	P	P	P	P
"Confined Space Entry", WEF Publication, Water Environment Federation, 601 Wythe Street, Alexandria, VA. 22314-1994, Phone: 1-800-666-0206. www.wef.org ISBN: 1-57278-122-X	P	P	P	P
"Wastewater Collection System Maintenance", Michael J. Parcher CRC Press. ISBN: 1566765692 www.crcpress.com Phone: 800/272-7737 Fax: 800/374-3401 email: orders@crcpress.com	P	P	P	P
"The Math Text for Water and Wastewater Technology" Second Edition, Wrights Training, P.O. Box 515, Elmira, CA. 95625-0515. (707) 448-3659 www.wrights-trainingsite.com (download form to order)	P	S	S	
"Operation and Maintenance of Wastewater Collection Systems" Volume II, Kenneth Kerri, Office of Water Programs, California State University Sacramento, 6000 J Street, Sacramento, CA. 95819-6025, Phone: (916) 278-6142.			P	P
"Wastewater Collection Systems Management", (Manual of Practice No.7), 5th Edition, ISBN: 1-57278-152-1 Water Environment Federation, 601 Wythe Street, Alexandra, VA. 22314-1994, 1-800-356-5705. www.wef.org			P	P
"Manage for Success: Effective Utility Leadership Practices", Office of Water Programs, California State University Sacramento, 6000 J Street, Sacramento, CA. 95819-6025, (916) 278-6142. www.owp.csus.edu				S
"Supervisor's Guide to Safety and Health Programs", Water Environment Federation, 601 Wythe Street, Alexandria, VA. 22314-1994, 1-800-666-0206.				S
"Applied Math for Wastewater Operators", Joan Kirkpatrick Price, CRC Press, 1-800-374-3401 www.crcpress.com ISBN: 0877620892				S
"Utility Management" Office of Water Programs California State University Sacramento 6000 J Street Sacramento, CA 95819-6025 9161278-6142 www.owp.csus.edu/	S	S	P	P
"Manual of Traffic Controls for Construction and Maintenance Work Zones-1996 State of California Department of Transportation 1900 Royal Oaks Drive Sacramento, CA 95815 www.dot.ca.gov Download from www.cwea.org/book_brcsg_csm3.shtml or www.dot.ca.gov/manuals.htm	P	P	P	P
"Safety and Health in Wastewater Systems" , WEF Manual of Practice SM-1 Water Environment Federation 601 Wythe St. Alexandria, VA 22314-1994 8001666-0206 www.wef.org ISBN: 1-881369-87 -0	P	P	P	P

	GRADE			
Reference	**I**	**II**	**III**	**IV**
"Manual of Traffic Controls for Construction & Maintenance Work Zones — 1990 State of California Department of Transportation 1900 Royal Oaks Dr. Sacramento , CA 95815 (916)445-3520; http:l/svhqsgi4.dot.ca.govlhqltraffopslsigntechlsigndel/pdffiles.htm	P	P	P	P
"Mathematics for Collection System Operators, a Workshop Manual OCT, Inc. P.O. Box 332 Gladstone, OR 97027 ; www.octinc.com	S	S	S	S
"Sewer Rehabilitation Handbook NASSCO" 140 Circle Dr. , Suite 103 Maitland, Fl 32751 www.nassco.org	S	S	S	S
"Trench Safety Shoring Manual, Red Cass Cruise Publications 1430 Tully Road, suite 416 San Jose, CA 95122	S	S	S	
"Operation and Maintenance of Wastewater Collection Systems, WEF Manual of Practice No.7-1985" Water Environment Federation 601 Wythe Street Alexandria, VA 22314-1994 ; (800)666-0206 ; www.wef.org	S	S	S	S

Conversions and Formulas Given in the Certification test

Conversions

12 inches = 1 foot
36 inches = 3 feet = 1 yard
5,280 feet = 1 mile
1,440 minutes = 1 day = 24 hours
144 square inches = 1 square foot
9 square feet = 1 square yard
43,560 square feet = 1 acre
1,728 cubic inches = 1 cubic foot
27 cubic feet = 1 cubic yard
1 cubic foot of water contains 7.48 gallons
1 cubic foot of water weighs 62.4 pounds
1 gallon of water = 8.34 pounds
1 million gallons per day (mgd) = 694 gallons per minute (gpm)
1 million gallons per day (mgd) = 1.55 cubic feet per second (cfs)
1 kilowatt = 1,ooo watts

Formulas

Flow = Area×Velocity

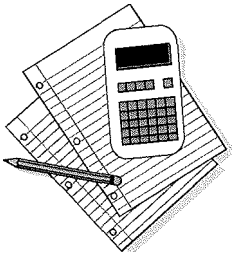

Area:
Rectangle = Length×Width
Circle = 0.785×(Diameter)^2

Circumference of a Circle = 3.14×Diameter

Volume:
Rectangular Solid = Length×Width×Depth
Right Rectangular Cylinder = 0.785×(Diameter)^2
= B×(Radius)^2×Length

$$Slope = \frac{Rise}{Run}$$

Preparing For Your Test

This section addresses a few possible methods for preparing for the certification test. Since you are most familiar with your own abilities you are responsible for determining the best method for preparing for your certification test. Following the suggestions in this section does not guarantee you will pass the certification test.

Determining Your Preparedness: An individual's preparedness for the certification test depends on a number of things including amount of practical experience in the vocation and years of education. If you are unsure how prepared you are for the test review the *Essential* Duties and *Test Content Areas* for the test that you are considering. If you are not familiar with most of the *Essential Duties* and *Test Content Areas* you should consider reviewing some of the material in the references listed for that grade level. You may also want to consider applying for a lower grade level if appropriate.

Using The Selected References: After evaluating how well prepared you are for the test you may want to review some of the Selected References. The references in this list may be used to review those Test Content Areas that you are not familiar with or those for which you have little background. Well prepared candidates may only have 'to brush-up on a few topics while those less prepared may have to study extensively.

Study Sessions: CWEA Local Sections host at least two study sessions in various parts of California. All applicants will be mailed the date and location of the nearest preparation classes if provided by Local Section to CWEA staff. Usually these classes are given about one month before the test date and last a full day with Grades I and II material covered in the morning and Grades III and IV. covered in the afternoon.

Using the Essential Duties and Test Content Areas as a Guide to Your Study: The Essential Duties (EDs) are a basic outline of the test subject matter. You can use the EDs as your study guide by referring to the EDs in the primary Selected References. For example, if you are preparing for the Grade II test, and you are not very familiar with ED #7 (Routine traffic safety planning), you can look up "Traffic control zones" in the index of *Operation and Maintenance of Wastewater Collection Systems Volume 1.* There you can read about safe procedures for traffic control on pages 141-145. Similarly, you could read about Test Content Area (TCA) #6 (Occupational hazards and standard safety), in the same reference. As you study you will find that the TCAs are related to the EDs (TCA #6 is clearly related to ED #7). Each test question is written to address at least one TCA and its related

FAQs

Frequently Asked Questions

Question: Is it required that I begin at the Grade I level then work my way up from there to higher levels?
Answer: No, you may take any test that you qualify for with your education and experience. However, if you are just starting out you can see by the education and experience requirements that you can work your way up the grade levels faster if you become certified at Grade I, then achieve each successive certification as soon as you get the required education and experience.

Question: If I take a Grade II, III, or IV test will I have to know the Test Content Areas for the lower level tests?
Answer: Yes, the subject matter for each test builds on the subject matter for those tests below its grade level. A thorough knowledge of the Test Content Areas for the grade level that you are taking is most important to your preparation, but you should expect questions from any of the lower grade levels.

Question: If I am re-taking a test that I had previously failed do I need to re-submit a full application and the entire application fee?
Answer: No, you must complete the Re-Test application with appropriate fees.

Question: Is continuing education required to renew my certification?
Answer: Yes. For any certificate earned on or after July 2001, you need to obtain 12 hours of continuing education every two years. For more information, visit www.cwea.org, or feel free to call the CWEA office.

Question: How long is the test?
Answer: All tests have about 75-100 questions and 3 hours are given for completion.

Question: Can I take more than one certification test at a same time?
Answer: Yes, but you can only take up to two at a same time (under a different vocation). You will be given a total of three hours to complete both tests.

Question: How do I get a receipt showing I paid for the test?
Answer: A receipt is sent to all applicants upon request. Hold on to this receipt until the certification process is over in case you have to submit it to your employer for reimbursement.

Question: If I am applying for the Grade IV test do I need to be a Supervisor?
Answer: No, you just need to have about one year of supervision experience, verified by your manager. You do not have to hold the title of "Supervisor."

Testing Window	Test Dates	Application Deadline
Spring	April 1 - June 30, 2009	February 27
Summer	July 1 - September 30, 2009	May 29
Fall	October 1 - December 31, 2009	August 31
Winter	January 1 - March 31, 2010	November 30

Other CWEA Certificate Programs

- Biosolids Land Application Management
- Environmental Compliance Inspector
- Mechanical Technologist
- Industrial Waste Treatment Plant Operator

California Water Environment Association
7677 Oakport Street, Suite 600
Oakland, CA 94621

Have a question?
Give us a call at (510) 382-7800.

City of Lodi
Wastewater Collection System "Rolling Stock"

VEH#	Notes	YR	MANUF	MODEL	DESCRIPTION	ACCT#
04-001	1	1991	DODGE	RAM 350	TRUCK, DUMP (CUMMINS)	170401 & 180451
04-028	3	1991	LEROI	Q185 DJDI	COMPRESSOR, AIR 4-CYL DSL	170401 & 180451
04-033	2	2007	JOHN DEERE	310J	BACKHOE	170401 & 180451
04-045	1	2006	CHEVROLET	SILVERADO 3500	PICKUP, 1 TON UTILITY, Electrician	170401 & 180451
04-063	3	2000	GMC	C2500	PICKUP, 3/4 TON UTILITY, P&E Mechanic	170401 & 180451
04-082	3	2000	GMC	SIERRA 2500	PICKUP, 3/4 TON UTILITY, W/WW Supervisor	170401 & 180451
04-116	1	1969	FORD	C600	TRUCK, 2 1/2 TON FLATBED	170401 & 180451
04-124	2	2004	UNGRD	VARIED	TRAILER, PIPEHUNTER VAC	170401 & 180451
04-125	3	2003	FREIGHTLINER	FL60	TRUCK, CNG, Service Truck	170401 & 180451
04-032	3	1992	FORD	E350	VAN, TV CAMERA	170401
04-038	3	1998	INTERNATIONAL	1300	CLEANER, VAC-CON SEWER	170401
04-095	3	1968	FORD	C600	TRUCK, 2 1/2 TON RODDING	170401
04-182	3	1983	FORD	E350	VAN, STEP	170401
04-323	1	1958	GORMAN-RUPP	14C2VH4D	PUMP, TRAILER MOUNTED 4" WATER	170401

Notes:
1) Allocated about 1/4 time for WW collection system activities
2) Allocated about 1/2 time for WW collection system activities
3) Allocated full time to WW collection system activities

APRIL 2009

VEH#	DIVISION	YEAR	MANUF	MODEL	DESCRIPTION	Charge out Rate
04-003	WASTE	1996	FORD	F150	PICKUP, 1/2 TON 4X4	$16 34
04-004	WASTE	1994	DODGE	INTREPID	SEDAN, 4 DOOR	$16 34
04-024	WASTE	1990	CASE	580 K	BACKHOE, TRACTOR	$35 27
04-032	WASTE	1992	FORD	E350	VAN, TV CAMERA	$90 91
04-038	WASTE	1998	INTERNATIONAL	1300	CLEANER, VAC-CON SEWER	$160 00
04-095	WASTE	1968	FORD	C600	TRUCK, 2 1/2 TON RODDING	$45 46
04-127	WASTE	2000	CHEVROLET	ASTRO	VAN, 8 PASSENGER	$16 34
04-137	WASTE	1996	DODGE	CARAVAN	VAN, MINI	$16 34
04-138	WASTE	1990	JOHNDEERE	4039T	PUMPER, PIT HOG SLUDGE	$15 98
04-139	WASTE	2003	GMC	SIERRA	PICKUP, 3/4 TON	$16 34
04-142	WASTE	2008	VOLVO	TAD721VE	PUMP, STORM/WASTEWATER	$15 98
04-182	WASTE	1983	FORD	E350	VAN, STEP	$16 34
WASTE Count	**#N/A**					
04-069	WATER	2003	CHEVROLET	S-10	PICKUP, 1/2 TON EXT CAB	$16 34
04-200	WATER	1995	CAT	SR4B	GENERATOR, (WELL # 7) EMERGENCY	not charged out equip
04-222	WATER	2005	OLYMPIAN	D150P6	GENERATOR, (WELL # 22) EMERGENCY	not charged out equip
04-255	WATER	1995	CAT	S4RB	GENERATOR, (WELL # 9) EMERGENCY	not charged out equip
04-256	WATER	1969	GM	100 KW	GENERATOR, (WELL # 13) EMERGENCY	not charged out equip
04-257	WATER	1996	CAT	SR4B	GENERATOR, (WELL # 5) EMERGENCY	not charged out equip.
04-258	WATER	2001	CAT	SR4B	GENERATOR, (WELL # 21) EMERGENCY	not charged out equip
04-259	WATER	1995	CAT	SR4B	GENERATOR, (WELL # 16) EMERGENCY	not charged out equip
04-260	WATER	1996	CAT	SN4	GENERATOR, (WELL # 4 R) EMERGENCY	not charged out equip
04-304	WATER	1996	HONDA	SS18	SAW, CONCRETE/ASPHALT SELF PROPELLED	$11 55
04-312	WATER	2001	TARGET	ES-14	SAW, ASPHALT/CONCRETE	$11 55
04-320	WATER	1970	HOMELITE	X	BLOWER, FRESH AIR MANHOLE	$15 98
WATER Count	**#N/A**					
04-001	WWW	1991	DODGE	RAM 350	TRUCK, DUMP (CUMMINS)	$25 15
04-017	WWW	1998	GMC	2500 SLE	PICKUP, 3/4 TON UTILITY	$16 34
04-025	WWW	1997	DODGE	INTREPID	SEDAN, 4 DOOR	$16 34
04-027	WWW	1996	JOHNDEERE	310D	BACKHOE, LOADER	$35 27
04-030	WWW	1997	DODGE	INTREPID	SEDAN, 4 DOOR	$16 34
04-033	WWW	2007	JOHN DEERE	310J	BACKHOE	$35 27
04-041	WWW	1966	CHEVROLET	C60	TRUCK, 2 TON UTILITY BODY	$25 18
04-045	WWW	2006	CHEVROLET	SILVERADO 3500	PICKUP, 1 TON UTILITY	$25 18
04-053	WWW	2001	DODGE	RAM 2500HD	PICKUP, 3/4 UTIL	$16 34
04-063	WWW	2000	GMC	C2500	PICKUP, 3/4 TON UTILITY	$16 34
04-070	WWW	2009	FORD	F550	TRUCK, W/UTIL BOX	$25 18
04-073	WWW	1995	FORD	F350	PICKUP, 1 TON W/CLUB CAB	$25 18
04-074	WWW	1997	FORD	F-350	TRUCK, 1 TON UTILITY BODY	$25 18
04-076	WWW	2001	DODGE	BR2500	PICKUP, 3/4 TON	$16 34
04-082	WWW	2000	GMC	SIERRA 2500	PICKUP, 3/4 TON UTILITY	$16 34

04-083	WWW	1997	DODGE	2500HD	PICKUP, 3/4 TON EXT CAB	$16.34
04-103	WWW	1991	X	TRAILER	TRAILER, 2 WHEEL	not charged out equip.
04-116	WWW	1969	FORD	C600	TRUCK, 2 1/2 TON FLATBED	$31.90
04-124	WWW	2004	UNGRD	VARIED	TRAILER, PIPEHUNTER VAC	$50.00
04-125	WWW	2003	FREIGHTLINER	FL60	TRUCK, CNG	$25.18
04-136	WWW	1991	INTERNATIONAL	4900	TRUCK, BOOM	$31.90
WWW Count	**#N/A**					

APPENDIX E

Design and Performance Provisions Documents

Appendix E includes the following:

E-1 Sanitary Sewer Design Standards

E-2 Sanitary Sewer System Construction Standards

E-3 Standard Plans

E-4 Technical Memorandum, SSMP Preparedness Audit Design and Performance Provisions

City of Lodi
Public Improvement Design Standards
Introduction

I -1 Purpose and Scope

These Design Standards are published as required by the City of Lodi General Plan to provide standards for public improvements constructed within the City. They are to be used in conjunction with City Standard Construction Specifications and Standard Plans (hereafter referred to in total as "Standards") They shall apply to all new and reconstructed public improvements done as part of private development, public and private utility work within right-of-way and public utility easements (PUE) and City projects. However, they do not include traffic signal and other minor, informal standards used by the City in the design of publicly funded projects and in the analysis of existing problems.

These Standards also apply to street, storm drainage, wastewater and water system improvements which are to be owned and maintained by the City of Lodi, except as noted below. The design of lighting and electrical facilities is not included in these Standards and shall be in accordance with rules and regulations of the City of Lodi Electric Utility Department.

Although intended for public improvements, these Standards affect the design of private, on-site facilities. In some cases, other City Departments refer to these Standards for their on-site requirements under separate authority. Generally, such cases are specifically identified in the appropriate sections.

Nothing in these Design Standards is intended to reduce or modify applicable Federal, State or Local laws nor to create a standard to be applied retroactively to existing improvements except where specifically noted.

I - 2 Design

These Standards are not a "Code" nor are they a replacement for engineering design and judgement. The design of each project is in itself a special case and these Standards should not be construed to be the maximum (or minimum) required design on a project. In some cases, it may be impractical to meet these Standards. The design engineer is encouraged to meet with City engineering staff to review design problems early to avoid reworking plans where deviations are not permitted. Legal requirements must be met; such requirements are noted "(legal min.)".

This document does not attempt to repeat all the various agency, professional and industry standards used in engineering design. Rather it cites acceptable references and sets desired standards for the normal range of work anticipated in Lodi based on expected local conditions. Names of references noted are abbreviated; full names and comments on them are included in Appendix A-5.

I - 3 Authority

These Standards are adopted by Resolution #91-92 of the City Council and implement various sections of the Lodi Municipal Code and General Plan goals and policies. Resolution #91-92 provides that the City Engineer shall interpret and make decisions concerning these Design Standards, The City Engineer is also empowered to update the Standards consistent with the General Plan and City Ordinances, Resolutions and policies affecting these Standards.

Section 1 - Streets

1.100 General

1.101 Scope

All public streets shall be designed in accordance with acceptable engineering principles and shall conform to these Standards. Primary references for supplemental information and/or details include the Caltrans Highway Design Manual, the Transportation Engineering Handbook, "A Policy on Geometric Design of Highways and Streets (the AASHTO "Green" Book) and "Design of Urban Streets".

Private streets and parking lots shall be designed according to applicable development approvals, City Codes and Standards and accepted engineering principles.

1.102 Submittals

The sequential requirements listed below are based on projects subject to the City's Growth Management Plan Developers and design engineers of projects not subject to the Plan should consult with the City Engineer to determine applicable and appropriate timing of submittals

Hpvploprnpnt Plan Stafle (prpliminary plan for pntirp parrpl/rtevplopmpnt)

Development plan submittals shall include a map showing the proposed project, existing streets (rights-of-way, medians, number of lanes and regulatory traffic controls) in the vicinity (400 ft. minimum) of the project and new street rights-of-way proposed for the project. At least one map showing right-of-way and lot lines shall be submitted at a scale of 1"=200'

Lot lines and sight-distance triangles per §1.303 shall also be shown at the following locations:

- intersections at reverse frontage lots;
- intersections at curved streets;
- intersections with adjacent building setbacks less than 20 feet

A table showing land use categories and acreage, trip generation and total traffic shall be provided.

Prniprt Mastpr Plan Stflflp (riptailpri plan for pntirp parnpl/ripvplnpmpnt)

A detailed street master plan for an entire project may be required by the City Engineer for projects involving extension of streets through adjacent property or to assure that the layout of the approved development plan will meet these Standards.

Improvement Plan Stafle (spprifin improvement plans for portion heinn rtevploppri)

Improvement plans shall include the information listed in 55.200 and Appendix A-1

1.200 Design Volumes

1.201 General

Unless otherwise designated in the Street Master Plan or approved development plan, the design volumes shall be used to determine required street classifications and shall be approved by the City Engineer For projects less than 100 acres, volumes may be estimated using these Design Standards in consultation with City Engineer; however, a traffic study may be required at locations with access, capacity or other traffic problems. Larger projects and those requesting

significant changes to the General Plan shall have a traffic study as required as part of the development approval process.

The following table relates street classification and design volume and design speed

Street Classification	R/W,(Curb	3urb- Width	Standard Configuration	Design Speed	Daily Traffic Volume Range	
Minor Residential	50	34	2 lanes	25	0	500
Standard Residential	55	39	2 lanes	30	500	4,000
Minor Collector	60	44	2 lanes	35	4,0..	
Major Collector	68	52	2 lanes with LT lane/median	40	10,000	14,000
Industrial (Local)	66	52	2 lanes	40	0	14,000
Secondary Arterial	80	64	4 lanes	50	14,000	22,000
Minor Arterial	94	76	4 lanes with LT lane/median	55	22,000	24,000
Major Arterial	118	102	6 lanes with LT lane/median	60	24,000	36,000

See §1 302 regarding cross sections.

1.202 Traffic Studies

Traffic studies shall only be conducted after consultation with the City Engineer regardij.^ *<».,„ of work, assumptions, computer programs and models *to* be used and other parameters.

Institute of Transportation Engineers (ITE) average trip generation rates shall be used as approved by the City Engineer. For mixed use development projects, individual building rates shall be added. For example, in a commercial development consisting of a large retail space with detached building pads, shopping center rates may be used for the large retail space and fast food, bank or other appropriate rates used for the pads. "Pass-by" reductions in rates shall be approved by the City Engineer.

Minimum trip generation rates per gross acre or other units are shown in the following table:

Land Use Type	Peak Rgte	Daily Rate	Units
Single Family Residential	1.1	10	TE/DU
Duplex Residential	0.9	8	TE/DU
Multi-Family Residential	0.7	6	TE/DU
Office	18	128	TE/Acre
Light Industrial	11	65	TE/Acre
Heavy Industrial	7	40	TE/Acre
Light Commercial	15	150	TE/Acre
General Commercial	30	300	TE/Acre
Shopping Center	30	300	TE/Acre
Public Offices & Civic Center	16	160	TE/Acre
Park & Public Facilities	04	4	TE/Acre
Elementary & Middle School	0.11	1.1	TE/Student
High School	025	2.5	TE/Student
Hospital	15	150	TE/Acre

TE = Trip End DU = Dwelling Unit

1.300 Street Design

1.301 General Design

Minor and Standard Residential streets shall be designed to discourage through traffic. Incorporation of moderately curved streets, cul-de-sacs, knuckles, and T" intersections in the site plan is encouraged.. Maximum length of continuous straight streets should not exceed 1,000 feet. Continuous straight streets with residential frontage, between two collector or arterial streets, are prohibited.

Block lengths shall not exceed 1300 feet.

On-site improvements on lots fronting arterial and major collector streets shall be designed ouch that exiting vehicles do not have to back out onto the street, (Use circular or hammerhead driveways, on-site circulation, etc)

A cul-de-sac shall be constructed on all permanent dead-end streets. Cul-de-sacs are discouraged in commercial and industrial developments and shall be specifically approved by the Planning Commission or City Council The maximum design volume on a cul-de-sac shall be 500 vehicles per day. The maximum length of a cul-de-sac regardless of volume shall be 750 feet.

Permanent cul-de-sac streets shall have a turn-around at the closed end with a minimum right-of-way radius of 50 feet. The reversing curves at the beginning of the turnaround shall also have a 50-foot R/W radius except in short cul-de-sacs (bulbs) where they would intersect the curb return at the entrance. In such cases, the design shall be specifically approved by the City Engineer. Asymmetrical configurations are permitted.

Temporary cul-de-sacs on dead-end streets that are to be extended may be required for Fire Department turn-around depending on the length of the street and location of fire hydrants.

Alleys

New public alleys are not allowed unless specifically approved by the City Council, however, developments with private streets may be designed to minimize the number of access points onto arterials.

& riflht-of-

Requirements for roadside or median landscaping or "hardscaping" and right-of-way (reverse frontage) fences are not included in these Standards and shall be determined on a case-by-case basis by the City Engineer subject to project conditions of approval

"Knuckles" on residential streets are to provide proper lot width at the setback line and shall conform to Standard Plan 133.

Lot lines should follow subdivision boundary lines unless specifically approved otherwise on the development plan. Streets shall be fully improved within tract boundaries.

1.302 Cross Section

Cross sections for standard street classifications are shown on Standard Plan 101 These cross sections may be modified by the City Engineer based on specific plans, traffic study requirements for project access lanes or other development approvals.

Streets along tract boundaries (half-streets) shall have a minimum 32-foot improved travelled way. If "No Parking" is approved by the City Council prior to approving the plans, the width may be reduced to 24 feet Temporary curbing shall be provided at the unimproved edge of the pavement,

The standard cross slope of the street shall be 2 5%. Where necessary to match existing facilities, the cross slope on new streets may vary between 1% and 4%. Replacement of existing travel lanes in order to meet cross slope criteria may be required. Intersection, cul-de-sac and knuckle cross slopes should be 2% maximum, 0.75% minimum.

Upon approval of the City Engineer, the cross slope may be increased to 9% for overlays, shoulder work or other special circumstances Grinding is normally required to minimize the effects of overlays and may include double passes, the first 6 feet wide, adjacent to the gutter at constant depth, with a second, tapered transition pass next to the first. (See §1.410, Driveway slope for additional criteria at driveways)

1.303 Intersection/Driveway Sight Distance

Minimum requirements for intersection and driveway sight distances are shown in the "Sight Distance Requirements" table and are based on stopping sight distances for traffic on the major (through) street and **stop control on the intersection/driveway** Preferred distances are from ITE Handbook Table 19-8 "Suggested Corner Sight Distances at Intersections" which are intended to allow opposing traffic to cross the major street without requiring approach traffic to reduce speed. These longer distances will normally be required for new streets and may be required in other circumstances depending on available setback or other considerations.

Planned intersection controls shall be considered in determining the appropriate sight distance. For example, where a traffic signal is planned, and the intersection will be initially controlled with a two-way stop, the minimum sight distance may be provided at the "stop" legs of the intersection.

Sight distance shall also be provided at median openings as appropriate.

Right-of-way or sight distance easements shall be provided at new reverse frontage fences, signs or other obstructions as appropriate. The "clear" area shall not contain shrubbery, mounds, signs or other obstructions over 30" high. Poles and trees shall be spaced far enough apart to provide adequate sight and tree limbs shall be at least 7 feet above the ground. (This section is not intended to preempt the zoning code with regard to front yard fences in residential areas.)

Sight Distance Requirements

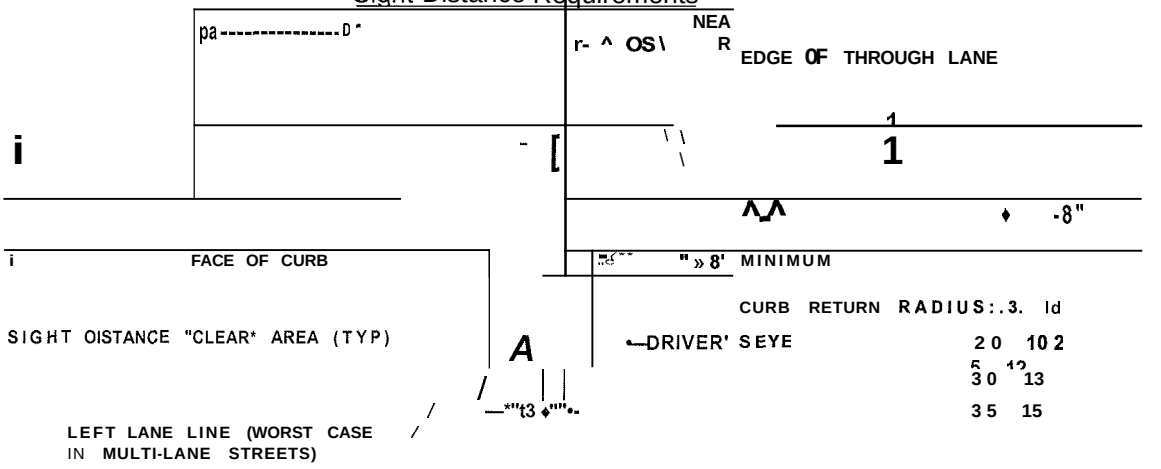

Major St. Classification	Design Speed	"A"	"B"	"D" (ft-) Minimum	Preferred
Minor Residential	25	14	25	150	250
Standard Residential	30	16	27	200	300
Minor Collector	35	19	30	250	350
Major Collector	40	17	34	300	400
Industrial	40	23	34	300	400
Secondary Arterial	50	17	40	430	500
Minor Arterial	55	17	52	500	550
Major Arterial	60	15	68	580	600

The above " A and "B" distances (in feet) assume new standard cross sections per Standard Plan 101 Existing streets shall be checked using the worst case of existing or future striping and the higher of the design speed or existing 85th percentile speed.

1.304 Vertical Alignment

Vertical curves are rarely required in Lodi due to the flat terrain Thus the following standards are brief and only describe minimum requirements. The design engineer is referred to the references cited for additional design criteria where compound curves are needed such as canal crossings.

Where the algebraic difference in longitudinal slope exceeds 1%, a parabolic vertical curve shall be used. The minimum length of vertical curve shall be per the following:

L = KA where L = length of vertical curve, ft K = constant per Table below A = algebraic difference in grades, %

Vertical Curve K Values

Design Speed	Crest Curve	Sag Curve
25	20	30
30	30	40
35	50	50
40	80	70
50	160	110
55	220	130
60	310	160

The above table is based on stopping sight distance per Table V-2 of the AASHTO "Green" Book In arterial streets where passing is permitted, higher K values per Table V-3 shall be used.

The minimum length of vertical curve shall be 200 ft. for design speeds below 40 mph and 400 ft for design speeds of 40 mph and above. Where the calculated length is below the minimum, the curve may be approximated by an intermediate straight segment(s)

Top of Curb and Flowline Grades

Flowline grades shall not be less than 0 25% and not greater than 6%. A normal design minimum of *0.30%* is recommended to minimize birdbaths. (Note gutter flowline tolerances in the Construction Specifications.) Where matching existing improvements, the minimum grade may be reduced with the approval of the City Engineer. With the specific approval of the City Engineer, curb height may be varied from a minimum of 4" to a maximum of *7"*

The minimum top of curb elevations shall be I-foot above the design maximum water surface of the Master Plan Storm Drainage Basin to which the proposed improvement is tributary, This minimum elevation is listed in §3.703

A minimum top-of-curb elevation of 1-foot above the calculated hydraulic grade line shall be maintained.

Grades on opposite sides of the street shall be the same wherever practical

On cul-de-sacs, knuckles and other curves (except curb returns) where the curb radius is less than 100 feet, the flowline grade shall be *0.30%* minimum.

Oirh Return

Top of curb fall (in feet) around returns shall be per the following table:

Radius	Retrofit Minimum	New Construction Minimum	New Construction Maximum
15	0 12	0.20	0.50
20	0 16	0.20	0.60
25	*	0.25	0.80
30	*	*0.30*	0.90
35	*	0.35	1.00
40	*	0.40	1.10
45	*	0.45	1 20
50	*	0.50	1.30

'Special Determination

At returns where the curb type changes, differences in curb height shall be taken into account in the design so as not to reduce the flowline fall.

Median grades shall follow street grades. Minor variation in top of median curb grades on opposite sides of the median is permitted depending on the width and nature of landscaping For aesthetic reasons, the maximum variation at noses or other medians less than 6 feet wide should be 0.15± ft. Median noses and other areas with solid fill in between curbs shall be sloped to drain

1.305 Horizontal Alignment

Street Curvature

Design of curved arterial and collector streets shall be based on criteria in the Caltrans Highway Design Manual The minimum radius of curvature of centerline for all streets shall be per the following table:

	Minimum Horizontal Curve Radius		
Street Classification	Design Speed	Radius (ft.)	Notes
Minor Residential	25	220	
Standard Residential	30	250	1
Minor Collector	35	500	1
Major Collector, Industrial	40	550	1
Secondary Arterial	50	850	1,2
Minor Arterial	55	1000	1,2
Major Arterial	60	1150	1,2

Notes:

1. Minimum radius is below that indicated in Caltrans ahwa 203 2 "Comfortable Speed on Horizontal Curves" for the standard cross slope. While this is acceptable on residential and industrial streets, larger radii, superelevation or reduced design speed should be considered on collector and arterial streets.
2. Minimum radius assumes no sight obstructions Figure 201.6 "Stopping Sight Distance on Horizontal Curves of the above reference should be checked when walls, or other obstructions are planned within 20 ft. of the right-of-way.

There shall be a tangent between reversing curves of at least 150 feet on arterial and collector streets, and 50 feet on all other streets.

Length of pavement transitions affecting travel lanes shall be designed per applicable Caltrans Standards (Hwy. Design Manual §206). At ends of curb & gutter, the minimum transition length shall be based on a 45° pavement transition. Longer distances will be required where a driveway is located at the end of the curb & gutter.

Intersection Anr)le

Streets shall intersect at right angles (± 5 degrees). Curved residential streets shall have at least 50 feet of centerline perpendicular (± 5 degrees) to the projected curb line of the intersecting street Longer perpendicular distances may be required on collector and arterial streets.

Curb return radii for various street types shall be as shown on Standard Plan 61 1

Angle points of 5 degrees or less are allowed on residential street centerlines with approval of the City Engineer In such cases, the curb face shall be designed with a IOO-foot radius curve.

All streets entering upon opposite sides of any given street shall have their centerlines directly opposite each other or separated by at least 150 feet. Cross streets are to be avoided unless one or more legs are cul-de-sacs. Greater distances may be required on collector and higher classification streets based on anticipated turning volumes. Intersections that are to be signalized shall be four-way.

The minimum distance between streets entering a restricted access street shall be as provided by a Specific Plan adopted by the Planning Commission and City Council.

The location of any new intersection between a local street and an arterial shall be reviewed by the City Engineer to determine safety and compatibility for signal progression. The City may restrict access to right-turn-only if necessary.

1.306 Medians

Medians and median openings shall be constructed at locations shown on Specific Plans or as required as part of project approval. See §1.301 regarding landscaping.

Design geometries for parabolic median curb transitions, fiares and left-turn-in-only median openings are shown in the Standard Plans

Median curb heights shall be 8" with a minimal reverse gutter provided. Due to excessive pavement deterioration from watering, interior drainage at landscaped medians shall be provided.

1.400 Drivewavs

1.401 General Requirements

The following driveway standards are not applicable to State Highway or controlled access streets where access is limited by deed or map restrictions or other development restrictions. If driveways are approved at such locations, the applicable design requirements shall be used New driveways on restricted access streets (most of Cherokee Lane and other streets per map or deed restrictions) require City Council approval.

The number, location and width of permitted driveways is regulated by the Public Works Department and shall be based on the demonstrated needs of the parcel being served They shall not be excessively detrimental to the abutting street capacity, safety, and/or efficiency.

The City Engineer may modify any of the following standards in order to provide better traffic movements or because of special or unusual conditions. The ITE publication "Guidelines for Driveway Design & Location" contains additional design guidelines.

"Commercial" driveways per Standard Plan 114 shall be used on all driveways serving 4 or more parking stalls and other locations where trucks, including garbage trucks, are anticipated. Where land use changes affect existing driveways proposed for reuse, the City Engineer may require upgrading of the driveway to commercial standards.

"Common" driveways straddling a property line to serve two or more parcels, are permitted provided applicable width and clearances are met.

1.402 Special Driveways

Special driveways are those with a depressed back of driveway at the property line and a radius instead of a curb transition and are used to provide improved access at high volume driveways and minimize capacity reduction on collectors and arterials. Design geometries are shown on Standard Plan 111.

Special driveways shall be used when the driveway peak hour volume exceeds 300 vehicles per hour and may be required at lower volume driveways at critical locations

Depth of flow in the gutter is limited to 3 inches, see §3.502.

1.403 Width

Maximum driveway width shall be 35 feet for standard driveways and 56 feet for special driveways unless specifically approved otherwise by the City Engineer for high truck volumes or other factors.

The total width of commercial and industrial driveways shall not exceed 60% of the frontage.

The minimum width of a single driveway shall be 12 feet and 24 feet for a driveway serving a parking lot with a two-way aisle Additional driveway width may be required on collectors and arterial streets particularly where there is no parking and a travel lane is adjacent to the curb.

Standard driveway width is measured at the curb line and includes only the depressed section. Special driveway width is measured between curbs behind the property side. Width of a raised medians separating in and out traffic is not included in the width,

1.404 Distances from Curb Returns

Commercial, industrial or other high volume driveways on arterials and major collectors shall be located as far as practical from the nearest curb return and may be prohibited within 100 feet where the intersection is signalized, is planned for signalization, or intersection capacity is critical. At other locations, the top of the driveway transition shall be at least 10 feet from the nearest curb return provided the return meets current standards for radius and location At streets to be widened or improved, the above distances shall"be measured from the ultimate location of the curb return,

At alleys the driveway transition shall be permitted no closer than 10 feet from the projected intersecting alley curb face, and no closer than 2 feet from the nearest alley curb return.

1.405 Distances From Utility or Safety Devices

Driveway transitions shall clear all public facilities such as street light and traffic signal standards, utility poles, fire hydrants, and street trees by a minimum of 3 feet. Greater distances from fire hydrants is recommended. Any relocation of public facilities required to maintain such clearance shall be at the expense of the party requesting the driveway.

1.406 Distance Between Driveways

A minimum of 4 feet of full curb height shall be maintained between the top of transitions of adjoining driveways No driveway shall be constructed which results in a curb length between transitions in excess of 14 feet, unless the curb length is at least 22 feet in length. Where practical, the total space between driveway transitions shall be in multiples of 22 feet plus 4 feet. (Spacing = 22X + **4)**

1.407 Distances From Property Line

A minimum of 2 feet of full curb height shall be maintained between the property line and the top of the driveway transition except where common use driveways have been permitted.

1.408 Removal

Any abandoned driveway shall be completely removed and replaced with standard curb, gutter and sidewalk, Driveways are considered abandoned when on-site development, fencing or other use demonstrates that the driveway is no longer needed

1.409 Parking Lot Driveways

Parking lot driveways shall be designed in such a manner as to preclude the use of the abutting public street for vehicular circulation solely related to the parking lot. The driveway shall be commercial type per Standard Plan 114. Design of the lot shall conform to Standard Plan 134

1.410 Driveway Slope

Driveways shall be designed to minimize vehicles scraping the pavement in front of the driveway or high-centering at the back of the driveway.

In new work, the driveway grade measured at a point 10 feet behind the flowline shall no; s*ceed 0.75 feet above the flowline

In designing overlays or driveway replacements, the deflection angle at the flowline determined by a point on the pavement 4 feet out from the flowline and a point on the driveway 10 feet behind the flowline should not exceed 9.75°.

1.500 Curb, Gutter and Sidewalk

1.501 General Requirements

Curb, gutter and sidewalk shall be installed in all new developments unless specifically deferred or otherwise waived. Curb and gutter may be required to be extended across adjacent parcels for drainage purposes. New ditches or swales are not permitted across residential frontages.

1.502 Curb and Gutter Type

Curb and gutter with a vertical "barrier" type curb shall be installed along frontages conforming to any of the following criteria:

- Collector, arterial or higher classification streets;
- Multi-family residential frontage;
- Commercial or industrial frontage;
- School, church, park or other public use frontage;
- Any curb where the street centerline radius is less than 200 feet unless specifically determined otherwise by the City Engineer;
- **All** curb returns;
- Installations where driveways are existing or known as part of an approved development plan unless specifically determined otherwise by the City Engineer;
- Other areas designated by the Planning Commission or City Council.

Roll "mountable" type curb and gutter per Standard Plan 136 may be installed on streets within new single-family developments. Valley gutters (Standard Plan 116) will be allowed only at intersections of cul-de-sac streets which provide access to fewer than 10 lots

Various designs of curb and gutter have been used in the City. For minor repairs of existing improvements, the type of curb and gutter shall match existing. In replacing curb returns or over 1/> of a block face, vertical or rolled curb & gutter per Standard Plan 135 & 136 shall be used as appropriate. Existing curb & gutter should be considered for replacement where ponding extends into the pavement. In replacement projects, curb height may be varied from 4" to 7" to match existing improvements.

Four foot transitions with weakened plane joints at each end shall be used to separate different curb & gutter types.

1.503 Sidewalk

The minimum widths of sidewalk shall be 4 5 feet in residential streets, 4 feet in local industrial streets, 7.5 feet in commercial areas, or as noted on the Specific Plan. The above widths do not include the curb width.

Widths shall be increased by at least one foot where fences, walls or other similar clearance obstacles to pedestrians are constructed.

At poles, trees and other small structures, the minimum clear width provided shall be four feet. Upon specific approval of the City Engineer, the minimum width may be reduced to three feet (legal min) in extreme cases, The "obstacle course" effect of closely spaced poles and other street hardware on opposite sides of the sidewalk shall be avoided.

New poles or other devices placed in the sidewalk on the curb side shall have a minimum distance from the face of curb of one foot.

Back of walk transitions necessary to accomplish the above clearances shall have smooth reversing curves or angle points with deflection angles not exceeding 30 degrees.

1.504 Wheelchair Ramps

Wheelchair ramps shall be installed in all new curb returns per Standard Plan 132 (legal min.) Ramps may also be required at "T" intersections or knuckle&at a lot line on the side opposite the curb return.

Wheelchair ramps shall be retrofit at curb returns where the adjacent street pavement is being reconstructed or new buildings are being constructed on corner lots.

Handicapped access shall be included at appropriate locations in medians, parking lots and other improvements (legal min.).

1.505 Back of Sidewalk

Improvement of the space between the back of sidewalk and the right-of-way (normally 2V2 ft.) shall be consistent with the proposed land use and minimal City maintenance. Where this space is incorporated into on-site landscaping, maintenance is the responsibility of the owner/developer.

At reverse frontage fences, the space shall be filled with additional sidewalk or approved hardscaping except where approved otherwise in the development plan.

1.600 Structural Section

The structural section shall be asphalt concrete (AC) pavement with aggregate base designed in accordance with the procedures contained in the "Flexible Pavement Structural Section Design Guide for California Cities and Counties" and these Standards. Full depth asphalt concrete may be specified as an alternate. The City has a computer spreadsheet to make the necessary calculations which is available to consulting engineers. The calculation includes a variable safety factor applied to the AC on high volume streets.

The soils report shall be a guide for determining the limits of appropriate R-values for design of structural sections. The limits shall be approved by the City Engineer prior to design. The R-value used in design shall not exceed 60 Upon approval of the City Engineer, the plans may be prepared based on

preliminary R-values with appropriate notes for timely retesting during construction for determination of final design values.

The Traffic Index shall be established by the City Engineer with a minimum of 2% trucks. The following table provides some minimum values and can be used as a guide in determining appropriate structural sections within a residential development.

Street	Maximum APT	T.I.	Minimum Section	Lowest R-Value*
Minor Residential	200	4.0	0.20* AC/0.30[1] AB or 0.35'AC	30
Minor Residential	500	4.5	0.20'AC/0.30'AB or 0.35" AC	40
Standard Residential	1000	5.0	0.20'AC/0.30[1] AB or 0.35'AC	47
Standard Residential	2300	5.5	0.20'AC/0.30'AB or 0.35'AC	53
Standard Residential	4000	6.0	0.20' AC/0.30[1] AB or 0.35' AC	58
Minor Collector	4200	6.0	0.20* AC/0.30[1] AB or 0.35'AC	58
Minor Collector	8200	6.5	0.25' AC/0.30[1] AB or 0.40" AC	60
Minor Collector	10000	7.0	0.25'AC/0.35'AB or 0.40* AC	60

* "Lowest R-value" is the minimum value necessary to allow use of the minimum structural section.

Minimum subgrade compaction of native material shall be 8" @ 92% relative compaction (R.C.) for residential streets and 6" @ 95% R.C. (removed and replaced material), over 6" @ 90% R.C. compacted original ground on industrial, collector and arterial streets. Any fill or disturbed material below shall also be compacted to 90% R.C.

These Design Standards are to be conservatively applied to developments to provide pavement that will have at least a 20-year design life.

Upon approval, transitions and other temporary pavements may be designed for a shorter life.

New development may be required to remove and replace existing pavement as necessary to provide a high quality connection between existing and new improvements. Examples include:

- ravelled edges of existing pavement;
- additional pavement to meet cross slope standards;
- ends of streets being extended;
- flares at shoulders;
- transitions

The City may require that the developer install a reduced pavement section in anticipation of excessive street cuts for utility services to the lots. In such cases, the developer shall pay the City the difference in cost between the full section and the reduced section and the City will be responsible for the installation of the future additional pavement.

Trench structural sections shall be as shown on Standard Plan 506 unless approved otherwise and shown on the improvement plans.

Pavement cuts may be prohibited in new or recently overlaid streets. In cases where such cuts are permitted, pavement "T" cuts or other special trench replacement sections may be required.

Design criteria and specifications for jacking or boring are not included in these Standards and are to be determined on a case-by-case basis.

Section 2 -Wastewater

2.100 General

2.101 Scope

These standards apply to all public wastewater facilities designed for installation within a public right-of-way or PUE in the City and are limited to sewer mains and laterals 15 inches or less in diameter Standards and requirements for larger sizes will be determined by the City Engineer as needed Except where specifically noted in these Standards or as required as part of project approval, all wastewater facilities installed on private property for private use and ownership shall be designed and constructed in accordance with the provisions of the Uniform Plumbing Code, as adopted by the City

Wastewater lines shall be designed in accordance with acceptable engineering principles, California OSHA Standards (legal min.), and State of California Title 22 requirements (legal min,), and shall conform to City Standards. Storm water collection facilities shall not be connected to a wastewater line Industrial waste sources may be connected or discharged into a wastewater line with approval of the City Engineer.

These Standards do **not** cover all the applicable City, State and Federal requirements for wastewater quality and monitoring (See Lodi Municipal Code and the Water/Wastewater Superintendent for applicable requirements.)

2.102 Submittals

The requirements listed below are based on projects subject to the City's Growth Management Plan. Developers and design engineers of projects not subject to the Plan should consult with the City Engineer to determine applicable and appropriate timing of submittals.

Dpyplnpmpnt Plan Stane (preliminary plan for entire parrel /development)

Development plan submittals shall include a map showing the proposed project, existing septic systems, wastewater mains in the vicinity of the project and new mains, 12" and larger proposed for the project.

A table showing land use categories and acreage and average and peak flows shall be provided (average flow in mgd, peak flow in cfs)

Proient Master Plan Stage (detailed plan for entire parnel/rievelrtpmpnt)

Prior to preparation of improvement plans for the first construction phase of the project, a wastewater master plan for the entire project shall be submitted for approval by the City Engineer.

The preliminary design submittal shall include the following items:

- A plan, 1" = 100' scale, showing the proposed system, preliminary pipe sizes, tributary subareas, existing and future tributary areas outside the project limits, zoning, projected land use, and any features affecting the system
- Design flows at major junction points including flows coming from outside the project limits. A calculation sheet is provided in the Appendix which may be reproduced by the consulting engineer.
- A description and preliminary sketches of any pump stations including: number and size of pumps, wetwell volume and operating levels, provisions for standby power or energy operations, and maintenance access.

- Where the design includes additional tributary areas outside the project as required by the City **ami** the developer wishes to obtain reimbursement for oversize pipes, the Engineer shall submit additional calculations and design for the project only in order to estimate the reimbursable portion.

Improvement Plan fitaqp (sperifir improvpmpnt plans for portion hpinfl ripvploppr l)

Improvement plans shall include the information listed in §5 200 and Appendix A-1

2 200 **Design Flow**

Wastewater lines shall be designed on a peak flow basis. Design peak flows shall be estimated by applying the appropriate peaking factor to the average flow.

For analysis of existing lines or where existing land use is higher than the zoning, flow shall be calculated based on an average sewage flow of 100 gallons per capita per day with a population of 3.0 capita per single family dwelling unit and 2.0 capita per multiple family dwelling unit.

For lines serving new areas or where existing land use is lower than the zoning, the City zoning map and/or general plan shall be used to estimate average flow. The following table summarizes this criteria:

Zoning	Land Use	Pers/unit	Units/acre	Pers/acre	Flow
R-1	Residential	30	4	12	0.00186 cfs/acre
R-2	Residential	3.0	6	" 18	0.00279"
R-GA	Garden Apt	2.0	20	40	0.00619"
R-MD	Medium Density Residential	2 0	30	60	0 00928"
R-HD	High Density Residential	2,0	40	80	0 01238"
PR	Planned Residential (unspecified)	2.6	7	18.2	0 00282"
PWLD	Planned Residential (low density)	2.75	5	13 75	0 00213"
PR/MD	Planned Residential (medium density)	225	12	27	0.00418"
PWHD	Planned Residential (high density)	200	24	48	0.00743"
		gal.	/acre/day		
xcx	Commercial		2500		0.00387"
Mxx	Industrial		2000		0.00309"
n/a	Institutional (Schools, etc)				0.000039 cfs/attendant

The above values are average figures based on the assumptions shown. At locations where a specific use is proposed for which the flow would exceed these figures, the higher value shall be used.

Peak flow shall be obtained by multiplying the average flow by the following peak factors These peak factors include an allowance for infiltration/inflow The peak flow factor shall be 3 0 for commercial and institutional flows and 2 0 for industrial flow.

Peaking factors for residential flow shall be selected from the figure below based upon total upstream service population.

Wastewater Peaking Factor

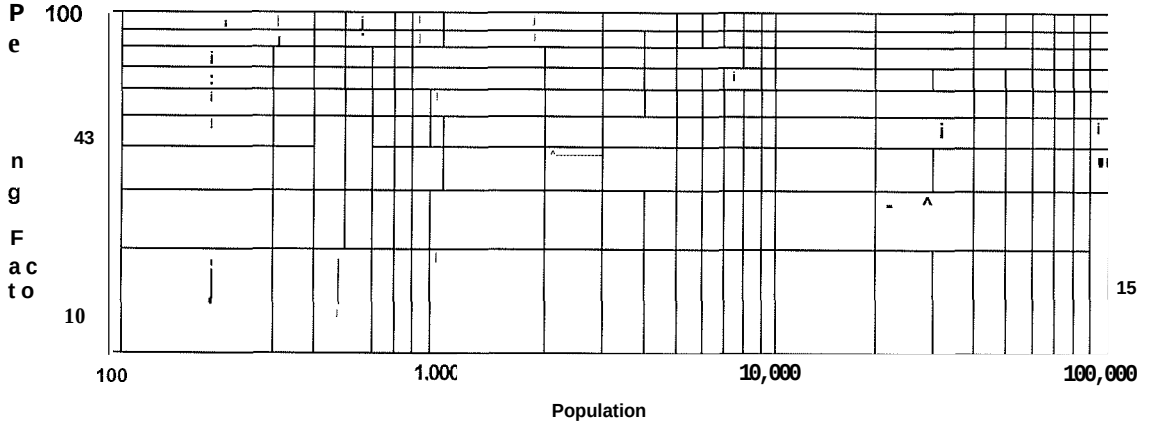

2.300 Pipe Design

2.301 Minimum Size

New gravity wastewater lines shall be 8 inches or greater in nominal diameter, except the mo,. upstream manhole-to-manhole reach of a main sewer having no potential for further extension may be 6 inches in nominal diameter.

2.302 Design Depth of Flow

Main wastewater lines (8 through 10 inches in diameter) shall be designed to flow a maximum of one-half full at peak design flow Trunk wastewater lines (12 inches and larger in diameter) shall be designed to flow a maximum of three-fourths full at peak design flow.

2.303 Slope

All sewers shall be designed to use the available slope to give peak flow velocities of not less than 2.0 feet per second based on Manning's formula using an "n" value of 0 013. Minimum slopes and the corresponding design capacity based on §2.302 and §2 303 are

>ize	Minimum Slope (ft/ft}	Design Cap. (cfs)	Full Cap. (cfs)
6	0.0048	0.20	0.39
8	0.0033	0.35	070
10	00025	055	1.10
12	0.0019	1.45	1 56
15	0 0014	2.25	2.42

It is understood that it is impractical to meet these velocity standards at upstream ends of the collection system and they are waived in such cases Designs in which downstream mains do not meet these velocity standards shall be specifically approved by the City Engineer,

Maximum velocity shall not exceed 10 feet per second at peak flow Sewers shall be designed with uniform slope between manholes

2.304 Vertical Alignment

The minimum cover for wastewater lines shall be 3 feet from the existing or planned final grade, whichever is lower, to the top of the sewer pipe. Laterals shall have a nominal cover of $2^1/s$ feet at the property line or at a point 5 feet outside the curb face or edge of paving, whichever is the greater distance from the roadway centerline.. See 92.401 for additional information regarding service lateral cover and 95 701 for structural considerations.

When crossing a water main, the wastewater line shall be installed below the water main with a clearance of at least 12 inches Where this separation cannot be maintained, the City Engineer may approve reduced clearances based on Standard Plan 415. A minimum vertical clearance of at least 3 inches shall be maintained between a wastewater line and a storm drain. Separation distances shall be measured from the nearest edges of the facilities

At points of convergence of pipes of various sizes, the pipe crown of the inflowing pipe(s) shall be no lower in elevation than the crown of the outflowing pipe. See 92.502 regarding drop manholes for additional information.

2.305 Horizontal Alignment

Wastewater Lines shall be placed within street rights-of-way unless placement in an easement is specifically approved by the City Engineer. Alignment shall be parallel to the street centerline whenever possible.

The horizontal alignment of wastewater lines in new streets, easements and private streets shall be as shown on the appropriate City of Lodi Standard Plan. In existing streets and other special cases (such as looped streets in which the utilities may be located concentrically to avoid crossings), the alignment may vary from the Standard Plans, but in no case shall there be less than 10 feet horizontal clearance to a water main, except as specifically approved by the City Engineer in accordance with State Department of Health Services policies.

Curved sewers are allowed. However, joint deflections or pipe curvature shall not exceed the pipe manufacturer's recommendations. The following table may be used as a conservative guide. If a shorter radius is desired, the appropriate design information (i..e. short pipe lengths, radius fittings, etc) shall be shown on the plans.

	Minimum Radius of Bending Circle (ft.)		
Pipe Size	Ductile Iron	PVC	VCP
4	190	160	200
6	190	160	200
8	190	210	200
10	190	270	200
12	190	320	200
15	n/a	390	260

Wastewater lines, including laterals, or other sanitary hazards shall not be constructed adjacent to any existing or proposed well site. California State Department of Health Services requirements shall be the minimum required separation, however these may be increased where the well location is not fixed or redrilling is planned.

2.306 Pipe Materials

The following standard pipe materials shall be used for gravity flow wastewater line construction and shall conform to the appropriate American Society of Testing and Materials (ASTM) and American Water Works Association (AWWA) specifications (latest revision):

Pipe Material	Specification
Ductile iron pipe	ASTM A746
w/polyethylene lining &	ASTM D1248, Class C, 30 mil thickness
polyethylene encasement*	AWWA C105
PVC sewer pipe and fittings	ASTM D3034 SDR 35
Vitrified clay pipe	ASTM C700 (extra strength)
laterals only:	
Cast iron soil pipe (4" & 6")	ASTM A74, service weight

* polyethylene encasement may be omitted if a corrosivity soils report provided per Appendix A of AWWA C105 indicates encasement is not needed. Alternate linings may be approved on a case-by-case basis,

New main sewers and/or laterals servicing exclusively industrial and commercial development may be limited to vitrified clay pipe depending on the proposed use.

Trench and pipe strength design shall be shown on the improvement plans per §5.700.,

2.307 Joints and Fittings

Joints and fittings shall be selected and installed to minimize infiltration and to prevent the entrance of roots throughout the life of the system. Ductile iron pipe joints and fittings shall conform to AWWA C110 or other approved joint for wastewater applications. Joints for PVC pipe shall be flexible elastomeric type conforming to ASTM D3212, Solvent weldedjoints for PVC pipe are not permitted. Joints for vitrified clay pipe shall conform to ASTM<£245r 4

Joining of pipe sections of unlike materials shall be accomplished using approved flexible band seals. Other joining methods shall not be used unless approved by the City Engineer.

2.400 Services

2.401 General

One service is allowed per parcel being served. Additional services may be specifically approved by the City Engineer in order to eliminate the need for on-site pumps or in other extreme circumstances,,

The minimum diameter for services (lateral sewers) shall be 4 inches.

A lateral sewer installed concurrently with a main sewer shall be of the same type and class of pipe material as the sewer main except where land use, cover or water main separation requirements indicate otherwise. For new services on existing mains, the lateral sewer may be of any approved pipe material as specified in §2,306,,

Size and depth of services is to be determined by the design engineer for the parcel being served subject to minimums contained in City Standards. Particular attention should be given to large, deep parcels. On-site lift stations may be necessary at upstream ends of mains, particularly on the east side of the City at the Central California Traction railroad,.

2.402 Monitoring Structures

A monitoring structure or sampling manhole/riser shall be installed per City standards near the back of walk where required by the City Engineer It shall be in a location accessible to City personnel at all times and may be considered as a cleanout in lieu of a separate required cleanout

2.403 Traps and Waste Interceptors

Appropriate traps and waste interceptors shall be installed on services or on-site as determined by the City Engineer in conformance with the Lodi Municipal Code.

2.500 Manholes and Miscellaneous Structures

2.501 Manholes

Manholes shall be located in areas accessible to cleaning equipment and at:

- the end of each line;
- all changes in pipe grade, size, or alignment;
- all junctions of sewer mains and/or laterals 6 inches or greater in diameter;
- distances not greater than 500 feet in continuous paved areas
- Where access to manholes is restricted, the pipe and accessible manrr' located such that there is a hose lay of no greater than 500 feet from .„,..,,.» e^< .J».,, access point to all portions of the sewer.

24" diameter risers may be used in lieu of standard 48" manholes where the depth to the invert is less than 42 inches.

Manholeslrisers may be required for inspection purposes at the end of stubs exceeding 25 feet in length

2.502 Drop Manholes

Drop manholes per Standard Plan 301 shall be provided where the inflowing pipe crown elevation is more than 2 feet above the crown elevation of the outflowing pipe.

2.600 Lift Stations

2.601 General

Lift stations shown on the Wastewater System Master Plan shall be designed per the following standards. Other lift stations shall be specifically approved by the City Engineer after consideration of all reasonable gravity flow alternatives. Design standards for temporary stations shall be determined on a case-by-case basis.

Lift station structures and electrical and mechanical equipment shall be located and designed such that they are protected from physical damage by the 100-year flood and will remain fully operational and accessible during the design storm.

The lift station shall be located off the travelled way of streets and alleys and shall be provided with paved vehicular access and appropriate security as required by the City Engineer.

2.602 Design

The lift stations shall be Ecodyne, Smith and Loveless Custom Series

Impressed current cathodic protection is required and shall be designed by a qualified corrosion control engineer.

California OSHA standards shall be observed in the design of all pumping station access structures

At least two pumps shall be provided for each pumping station.

If only two units are provided, they shall ha^o the same capacity. Each shall be capable of handling the peak flow Where three or me* e units are provided, they shall be designed to fit actual flow conditions and must be of such capacity that with any one unit out of service, the remaining units will have capacity to handle maximum sewage flows.

Design pumping rate shall be the peak inflow for the ultimate tributary area For Master Plan Stations, initial lower flow rates shall be considered in the design. It may be appropriate to provide an interim design with fewer or smaller capacity pumps. However, the station and site should be designed for ultimate conditions

Wetwells

The wetwell size and control setting shall be appropriate to avoid heat buildup in the pump motor due to frequent starting and to avoid septic conditions due to excessive detention time. Total pump starts shall be limited to no more than 10 per hour.

Wetwells shall be reinforced concrete with coal tar epoxy lining (Tnemec Hi-Build Tneme-Tar 46H-413, two coats; or approved equivalent).

The wetwell floor shall have a minimum slope of 1 to i to a hopper bottom The horizontal area of the hopper bottom shall not be greater than necessary for proper installation and function of the pump inlet.

Ancillary Fqnipmpnt

Ancillary equipment such as air release or other valve pits shall be provided as necessary including adequate ventilation and corrosion protection.

Flentrinal Equipment

All wetwell electrical equipment shall be explosion proof and meet National Electrical Code Class 1, Division 2, Group D requirements. All drywell electrical equipment shall be NEMA 4.

Telemetry equipment identical to the City's latest SCADA equipment shall be provided. Alarms shall be activated in cases of high water, power failure, pump failure, use of the lag pump, unauthorized entry, or any cause of pump station malfunction.

fitanrihy Pnwpr

Pump stations of greater than 0.25 mgd peak flow capacity (which include those shown on the Master Wastewater Collection System Plan) shall include permanent installation of standby power. Engines shall be provided with silencing equipment appropriate for the adjacent land use per zoning and General Plan standards.

Smaller capacity stations, where approved, shall either provide standby power or dual, manually switchable electrical feeds from separate transformers,

Potable water supply with a reduced pressure backflow prevention device (Febco Model 825) is required for all pump stations.

Instn mtinns anrl Fanipmpnt

Three complete sets of operational instructions (including emergency procedures and maintenance schedules), special tools, and such spare parts (i.e., mechanical seals, wear rings, filters, etc.) as may be necessary shall be provided for all pump station equipment.

2.603 Force Mains

At average pump flow, a velocity of at least 2 feet per second shall be maintained

An automatic air relief valve shall be placed at high points in the force main to prevent air locking

Force mains shall enter the gravity sewer system at a point not more than 1 foot above the flow line of the receiving manhole.

Cleanouts and other special fittings shall be provided as required by the City Engineer

The force main and fittings, including thrust blocking, shall be designed to withstand normal pressure and pressure surges (water hammer)

The following standard pipe materials shall be used for force-main construction and shall conform to the applicable ASTM or AWWA specification (latest revision)

Pipe Material	Specification
Ductile iron pipe	AWWA C151
w/polyethylene lining &	ASTM D1248, Class C, 30 mil thickness
polyethylene encasement*	AWWA C105
PVC Plastic Pipe	AWWA C900

* polyethylene encasement may be omitted if a corrosivity soils report provided per Appendix A of AWWA C105 indicates encasement is not needed Alternate linings may be approved on a case-by-case basis.

Pipe strength (Class) shall be determined by accepted engineering principles and the pipe specification based on the design pressure.

Trench design shall be shown on the plans per §5 700

Friction losses through force mains shall be based on the Hazen and Williams' formula with a value for "C" equal to 120.

Separation from Water Mains

Force main separation from water mains shall conform to applicable State Dept. of Health Services regulations (legal min), City Standards and appropriate construction details shall be shown on the plans.

Section 3 - Storm Drainage

3.100 General

3.101 Scope

These standards apply to all public stormwater facilities designed for installation within a public right-of-way or PUE in the City. Except where specifically noted in these Standards or as required as part of project approval, all stormwater facilities installed on private property for private use and ownership shall be designed and constructed in accordance with the provisions of the Uniform Plumbing Code, as adopted by the City.

Stormwater lines shall be designed in accordance with acceptable engineering principles and California OSHA Standards (legal min.), and shall conform to City Standards. Storm water collection facilities shall not be connected to a wastewater line except where specifically required by the City Engineer. Industrial waste sources shall not be connected or discharged into a stormwater line without a specific discharge permit.

These Standards do **not** cover all the applicable City, State and Federal requirements for storm quality and monitoring. (See §5 603 for additional discussion.,)

3.102 Submittals

The requirements listed below are based on projects subject to the City's Growth Management Plan. Developers and design engineers of projects not subject to the Plan should consult with the City Engineer to determine applicable and appropriate timing of submittals

npyplnpmpnt Plan fttafi[p] (preliminarv plan for entire parrel /development)

Development plan submittals shall include a map showing the proposed project, existing storm drains in the vicinity of the project and new storm drains, 30" and larger proposed for the project

A table showing land use categories and acreage, C-factors and 100 year storm volume (in acre-feet) shall be provided.

Proiect Master Plan Stape (Hptailpri plan for entire parrel /development)

Prior to preparation of improvement plans for the first phase, a storm drain master plan for the entire project shall be provided for approval by the City Engineer.

The preliminary design submittal shall include the following items:

- A plan, 1" = 100' scale, showing the proposed system, preliminary pipe sizes, tributary subareas, existing and future tributary areas outside the project limits, zoning, projected land use, and any features affecting the system
- Hydrology and hydraulic calculations together with assumptions, charts, tables, references and methods used. A calculation sheet is provided in the Appendix which may be reproduced by the consulting engineer.
- A plan, preferably 1" = 100' scale, showing proposed street system, existing and proposed drainage system, tributary sub-areas (including offsite drainage), and peak flow in all pipes.
- A plan showing the hydraulic grade line (HGL), the proposed storm drain including slopes and sizes and top of curb in profile. Elevations should be shown at all changes in slope of the HGL, proposed storm drain and top of curb.
- Where the design includes additional tributary areas outside the project as required by the City **and** the developer wishes to obtain reimbursement for oversize pipes, the Engineer shall submit additional calculations and design for the project only in order to estimate the reimbursable portion.

Imprnvempnt Plan Stane (specific: improvement plans for portion heinn developed)

Improvement plans shall include the information listed in §5 200 and Appendix A-1.,

3.200 Design Flow

The Rational Method (Q = CiA) shall be used to determine runoff flow (Q) for areas less than " Larger areas require special consideration and should be discussed with the City Engineer prior design.

Minimum values for the coefficient of runoff (C) and time of concentration are as follows:

Land Use	C Factor	Tc (minutes)
Parks	0.20	30
R-1 and R-2 (Residential)	0.40	25
R-GA, R-MD and R-HD (Apartments)	050	20
Schools and Churches	0.50	20
Commercial	080	10
Industrial	090	10
Surface		
Pavement	0.95	
Roofs	080	
Compacted earth (no gravel)	0.75	
Lawn & Open Area	020	

Where a specific project is proposed, a composite C factor may be determined based on a weighted average of the surface C factors.

Values for rainfall intensity (i) for corresponding time of concentration shall be taken from Standard Plan 606 or computed from the formula shown.

The area (A) shall be the tributary drainage area in acres.

Preliminary estimates of detention volume (V) for development plan submittals shall be calculated based on V (acre-feet) = 0.4CA. (0.4 feet of rain = 100 yr, 48 hr. storm)

3.300 Pipe Design

3.301 Minimum Size

The minimum size for storm drain mains shall be 12-inch diameter.

All new catch basin laterals shall have a minimum diameter of 12 inches, except where an on-site service is connected to the catch basin. In such cases, the lateral shall be one size larger than the service.

3.302 Design Depth of Flow (Hydraulic Grade Line)

Manning's formula shall be used to calculate design flow, slope, velocity and pipe diameter relationships. The friction factor, "n", shall be 0.013 for all types of pipe.

Normally, due to the hydraulic grade line determined by the trunk line or downstream basin, storm drains are surcharged

The starting hydraulic grade line and assumed flow will be provided by the City at the downstream master plan line or intervening system if calculations are available. If the proposed project's flow is 5% or more above the assumed flow, the new calculations shall be extended downstream until the difference is less than 5% or a basin or pump station is reached.

All storm drains shall be designed for the peak flow entering the catch basin at the point of concentration and shall have a minimum of 1 foot of freeboard between the top of curb and the hydraulic grade line.

Note: The design does not need to check each catch basin. Flows may be calculated at manholes. However, the following catch basins are to be checked:

- the most upstream catch basin;
- the lowest catch basin;
- catch basins with on-site services;
- other potentially critical catch basins as designated by the City Engineer.

3.303 Slope

Storm drains shall have minimum slopes per the follov

Size (in.)	Minimum Slope (ft/ft)
12	0.0019
15	0 0014
18	0 0011
21	0.0009
24	0.00075
30	0.00055
36	0.00044
42	0.00035
48 +	0.00030

The above slopes are intended to provide a velocity of 2.0 feet per second when flowing half full regardless of the slope of the hydraulic grade line. (In the City's surcharged system, velocities based on the design hydraulic grade line are well below 2 feet per second except in trunk lines.)

Pipes with lower velocities shall use available fall and shall be specifically approved by the City Engineer.

Maximum velocity shall not exceed 10 feet per second.

Storm drains shall be designed with uniform slope between manholes.

Siphons are not be permitted (See $3.501 regarding separation manholes).

Catch basin laterals shall have a minimum fall of 0.10 foot between the catch basin and manhole. Desirable fall is 0.30 foot or more.

3.304 Vertical Alignment

The minimum cover on main line storm drains shall be 2 feet in residential streets and 2!/a feet in all other streets. See $5 701 for structural considerations.

A minimum vertical clearance of 3 inches shall be maintained between a wastewater lines and other underground utilities. Clearances to water mains shall be the same as that for wastewater lines. ($2.304; Standard Plan 415)

In general, at points of convergence of pipes of various sizes, the top of pipe elevations shall match, or, when approved by the City Engineer, the maximum difference in flow lines shall be less than 4 feet. This does not apply to catch basin laterals.

3.305 Horizontal Alignment

Horizontal alignment of storm drains shall be per the applicable requirements for wastewater lines (§2.305; Standard Plan 415).

Required clearances to water mains shall be the same as wastewater lines

Curved storm drains are allowed However, joint deflections or pipe curvature shall not exceed the pipe manufacturer's recommendations The following table may be used as a conservative guide. If a shorter radius is desired, the appropriate design information (i.e. short pipe lengths, radius fittings, etc.) shall be shown on the plans

Minimum Radius of Bending Circle (ft.)

Pipe Size	Ductile Iron	PVC	VCP	Cone"
12	190	320	200	200
15	n/a	390	260	240
18	n/a	n/a	n/a	290
21	n/a	n/a	n/a	340
24	n/a	n/a	n/a	390
27	n/a	n/a	n/a	440
30	n/a	n/a	n/a	480

• Concrete pipe figures assume 6 ft pipe length and 3/8" joint pull; plans should indicate required dimensions and require manufacturer's certification

3.306 Pipe Materials

The following standard pipe materials shall be used for storm drain construction and shall conform to the appropriate American Society of Testing and Materials (ASTM) and American Water Works Association (AWWA) specifications (latest revision):

Pipe Material	Specification
Concrete pipe	ASTM C14
Ductile iron pipe	ASTM A746
w/cement lining &	AWWA C104, std. thickness
polyethylene encasement*	AWWA C105
PVC sewer pipe and fittings**	ASTM D3034 SDR 35
Reinforced concrete pipe	ASTM C76
Vitrified clay pipe	ASTM C700 (extra strength)

* polyethylene encasement may be omitted if a corrosivity soils report provided per Appendix A of AWWA C105 indicates encasement is not needed

** PVC pipe is not allowed as a main in commercial and industrial areas or in arterial streets,

Cast-in-place concrete pipe, 30 inches and larger, may be used when specifically approved by the City Engineer. Cast-in-place pipe will not normally be permitted in existing streets.

Easement lines shall pass the same leakage tests as wastewater lines.

Trench and pipe strength design shall be shown on the plans per 95 700.

3.307 Pipe Joints

Storm drain joints shall be designed and installed to minimize infiltration and to prevent the entrance of roots throughout the life of the system.

Joints for concrete pipe shall be rubber gasketed joints per ASTM C443. Mortar joints shall be used only when specifically approved by the City Engineer.

Joints for vitrified clay pipe shall conform to ASTM C245. Joints for PVC pipe shall be flexible elastomeric type conforming to ASTM 03212,

Joining of pipe sections of unlike materials shall be accomplished using approved flexible band seals. Other joining methods shall not be used unless approved by the City Engineer.

3.400 Services

3.401 General

In general, only one storm drain service is to be provided per parcel served Additional services may be approved by the City Engineer depending on the on-site layout, available mains and land use/monitoring requirements.

Storm drain services are provided to improve public health and safety and minimize inconvenience created by on-site drainage running over the sidewalk and in the gutter. Services carrying process, wash or other wastewater shall be specifically approved by the City Engineer in conformance with the Lodi Municipal Code.

Parcels over 1 acre (net) shall have an on-site collection system connected to the public system.

Industrial and commercial parcels under 1 acre shall utilize on-site drains or thru-the-curb drains to minimize drainage over the sidewalk.

It is recommended that roof drains of large buildings (carrying only drainage) be pipe thru-the curb or connected to an underground system at the property line downstream of any required monitoring device or trap.

Underground services shall connect to the public system at a manhole or catch basin. A direct tie may be approved where a suitable on-site access structure is provided and the criteria per $3.501 are met.

3.402 On-site Design Requirements

For industrial land use and commercial uses involving potential water quality hazards (including, but not limited to: automotive service, gas stations, and car washes) the following requirements shall apply:

- All storm drainage shall be picked up in an on-site drainage system, unless approved otherwise.
- The on-site drainage system shall be tied to the City's storm drain system, either at the back of a City catch basin or at a storm drain manhole on the City's system
- An approved sand and oil trap shall be constructed on new storm drain discharge lines The City may also require a sand and oil trap on existing storm drain discharge lines or through-the-curb drains.
- All sand and oil traps shall be readily accessible and on the street side of all fences and gates and not in the sidewalk area.

- No storm drainage will be allowed to flow over the curb, gutter, and sidewalk into the street Roof drainage may be tied directly to a "through-the-curb drain" per Standard Plan 129 Exceptions are driveway approaches and landscaped areas adjacent to sidewalks
- With approval from the City Engineer, smaller industrial parcels may be allowed to drain through the curb face. This approval shall depend upon existing street conditions, the location of City storm drain facilities, and the size and use of the parcel On-site drainage must still flow through a sand and oil trap.

Also, see 95 603 regarding erosion control

3.500 Manholes and Miscellaneous Structures

3.501 Manholes

Manholes shall be placed at the intersections of all storm drains including laterals, at all locations where there is a change in size, change in horizontal or vertical alignment and at the ends of all permanent lines.

Manhole spacing shall conform to the following limits:

Diameter	Maximum Spacing
12" to 30"	500 feet
33" to 54'	750 feet ....
60" and over	1000 feet

Manholes will not be required at laterals where all the following conditions are met:

- maximum size of catch basin lateral is 15 inches, and;
- the main storm drain has a diameter of 48 inches or larger, and;
- the maximum top of curb to invert depth at the catch basin is 4 feet, and;
- no other existing or future manhole is within 100 feet along the main storm drain centerline, and;
- connection is made in conformance with Standard Plan 305.

24" diameter risers may be used in lieu of standard 48" manholes where the depth to the invert is less than 42 inches. Where the main is over 42 inches in diameter or where large pipes intersect such that a standard 48" manhole is not practical, a special design, usually using standard, prefabricated sections, shall be shown on the plans. On cast-in-place pipe, saddle manholes per Standard Plan 302 may be used.

Manholes/risers may be required for inspection purposes at the end of stubs exceeding 50 feet in length

Special "separation" manholes may be designed where wastewater and storm lines intersect due to grade restrictions. Criteria and details are to be approved by the City Engineer on a case-by-case basis

3.502 Catch Basins

Side inlet catch basins (SICB) shall be located at all gutter low points and shall be spaced in such a manner that design storm flows will not encroach into the travel lanes or exceed the curb height. In addition, at special driveways the depth of flow shall not exceed 3 inches. Standard Plan 608 provides a Hydraulic Street Capacity Chart for use in determining whether the design flows encroach into the travel lanes.

The total gutter run contributing to any catch basin shall not exceed 1,000 feet. It is desirable to locate catch basins on the BCR or ECR which will intercept the most runoff and also keep the main pedestrian crossing as dry as possible.

Drop inlet catch basins may be constructed only in alleys, parking lots or as temporary installations on unimproved streets where curb and gutter has not yet been installed. In gutters where a new driveway is being installed that conflicts with an existing side inlet catch basin, upon approval of the City Engineer, a drop inlet catch basin may be installed as a junction box and the SICB must be relocated.

3.600 Pump Stations

The only pump stations permitted are those included in the Master Storm Drain system and private, on-site stations serving single parcels

Master Storm Drain system stations shall be custom designed for the particular project

Private systems shall be designed according to the applicable Building, Plumbing, Mechanical and Electrical Codes adopted by the City.

3.700 Detention Basins

3.701 General Requirements

The Master Storm Drain system is based on the use of large, publicly owned and maintained detention basins in order to meet discharge flow limitations to downstream facilities or receiving waters. Privately owned and maintained drainage basins are prohibited except in the following circumstances:

- temporary facilities approved by the City Council, in which the design is planned for ultimate connection to the City system;
- permanent facilities specifically approved by the City Council;
- facilities in existence at the time of annexation until the property is developed or otherwise improved and falls under City development requirements.

3.702 Temporary Basins

Basins Serving Single Parcels

If approved, temporary basins on private property to serve single, one-ownership parcels shall be designed with the following criteria:

- A 48-hpur, 1O-year storm, total rainfall of 3.3 inches shall be used if a reasonable outlet is provided. If no disposal other than evaporation, percolation or irrigation is provided, a 48-hour, 100-year storm, total rainfall of 4.8 inches, shall be used.
- The maximum water surface of the basin shall be 1 foot below the elevation of the top of curb at the lowest catch basin inlet within the tributary area and a maximum of ▮ foot above the design hydraulic grade line at the basin.
- Fencing shall be provided around all basins greater than 3 feet in depth.
- Adequate all-weather access shall be provided
- The tributary drainage system shall be designed to connect to the City's future storm drainage system.
- Any additional requirements placed as a condition of approval shall be incorporated into the design,

Basins Serving Multiple Parcels

For temporary basins serving multiple parcels, the following criteria should be considered in its design. The final design shall be as approved by the City Engineer in accordance with City Council requirements of approval.

- The area cannot be reasonably served by a public storm drainage system.
- The Developer shall pay the City for maintaining and operating the storm water drainage system and appurtenances.
- The basin may be deeded to the City as long as the area is used as a ponding basin. When the City of Lodi storm drain system is expanded to serve the area, the parcel of land reverts back to the developer's ownership and shall be restored back to original condition by the owner
- A minimum 10-foot wide access road shall be provided around the basin
- The maximum side slope shall be 6:1.
- Six-foot chain link fencing with redwood lath filler shall be provided around the basin with double 8-foot vehicle gates and one 3-foot personnel gate
- The basin shall store a 10-year, 48-hour storm (3.3 inches) for the service area.
- Facilities shall be provided to enable the basin to be pumped or drained into a public permanent system within a 48-hour period. The pump station shall have 50% standby and a minimum of 2 pumps.
- The maximum design water surface of the basin shall be a minimum of 1 foot below the elevation at the top of curb of the lowest catch basin inlet within the tributary area and a maximum of 1 foot above the design hydraulic grade line at the basin.
- The tributary drainage system shall be designed to connect to the City's future storm drainage system.

3.703 Permanent Basins

Permanent basins, including fencing and other details, shall be specifically designed to the site, using the above criteria for basins serving multiple parcels except that a 48-hour, 100-year storm, 4.8 inches total rainfall, shall be used. The design shall be compatible with the Storm Drain Master Plan. The following table summarizes hydraulic design criteria for the basins:

Drainage Area/Basin		Elevation of: Maximum Water Surface	Design Hydraulic Grade Line
A-1	Kofu Park	37.0	36.0
A-2	Beckman Park	33.0	32.0
B-1	Vinewood Park	35.0	34.0
B-2	Glaves Park	360	35.0
C	Pixley Park	470	46.0
D	Salas Park	392	38,2
E	Westgate Park	34.5	33.5
F	(future)	270	26,0
G	DeBenedetti Part <	270	26.0
H	(drains to Mokelumne River, see below)		
I	(future)	23.0	220

Existing outfalls for areas tributary to the Mokelumne River have been designed under various standards. Recently installed outfalls have been designed on the basis of a River hydraulic grade line one foot below the 100 year flood elevation. However, since the design and installation of these outfalls, newer FEMA flood studies have raised this flood elevation. Since no new outfalls are contemplated under the Storm Drain Master Plan, new standards have not been developed. Hydraulic design criteria for new storm drains lines in the H area shall be determined on a case by case basis by the City Engineer.

SECTION 4 - Water

4.100 General

4.101 Scope

These standards apply to all public water facilities designed for installation within a public right-of-way or PUE in the City and are limited to mains and services 12 inches or less in diameter, Standards and requirements for larger sizes will be determined by the City Engineer as needed In residential developments, on-site mains and hydrants for fire protection shall be public. Other on-site facilities, unless specifically noted in these Standards or as required as part of project approval, shall be private and shall be designed and constructed in accordance with the provisions of the Uniform Plumbing Code, as adopted by the City. (See §4.401 re services)

Water lines shall be designed in accordance with acceptable engineering principles, California OSHA Standards (legal min), and California Department of Health Services Regulations, Title 22, Chapter 16, California Waterworks Standards (legal min.), and shall conform to City Standards.

4.102 Submittals

The requirements listed below are based on projects subject to the City's Growth Management Plan. Developers and design engineers of projects not subject to the Plan should consult with the City Engineer to determine applicable and appropriate timing of submittals.

Development Plan Stafp (preliminary plan for entire parrel /development)

Development plan submittals shall include a map showing the proposed project, existing wells, existing water mains in the vicinity of the project and new mains, 10" and larger proposed for the project.

A table showing land use categories and acreage, average and peak hour flows and maximum day plus estimated fire flow shall be provided (all flows in gpm, except average in mgd)

Proiprt Master Plan Starip friptailpri plan for entire parrpl /ripvplnpmpnt)

Prior to preparation of improvement plans for the first phase, a water master plan for the entire project shall be submitted for approval by the City Engineer. The plan shall show size and location of all proposed mains

Flow and pressure calculations are required for commercial, industrial and medium and high density residential developments. Calculations will not normally be required for low density residential developments unless there is a question regarding the need for looping.

Where the design required by the City includes capacity above that needed to serve the development **and** the developer wishes to obtain reimbursement for oversize pipes, the Engineer shall submit calculations and design for the project only in order to estimate the reimbursable portion.

Improvement Plan Stan.e (specific improvement plans for portion heinq developed)

Improvement plans shall include the information listed in 95 200 and Appendix A-1.

See §5.200 regarding timing of well abandonments and improvement plan approval.

4.200 Design Flow

Unless City of Lodi metered information or data from other agencies is provided or required, the following water demands shall be used:

Land Use	Unit Demand	Peaking Factors Max. Day	Max. Hour
Residential	285gpcd	2.24	3.28
Commercial/Office	2750 gpad	2.24	3.28
Industrial	2200 gpad	2.24	3 28

gpcd = gallons per capita per day gpad
= gallons per acre per day

Per capita and density figures per 92.200 shall be used unless specific project information is available.

Fire flow for specific projects shall be as provided by the Fire Marshal. For preliminary studies, the highest applicable case of the following fire flow shall be used:

Land Use	Fire Flow
Low Density Residential	2000 gpm
Medium & High Density Residential	3000 gpm
Commercial & Industrial	4000 gpm

4.300 Pipe Design

4.301 Minimum Size

The minimum size pipe used for new water mains shall be per the following table:

Location/adjacent land use	Size (inches)
As shown in Water Master Plan	10,12 as indicated
Commercial & Industrial	8
School, other Public Use	8
High Density Residential	8
Low & Medium Density Residential	6
Unsupported looped length exceeding 800 ft.	8
Residential dead-end with DO. fire hydrant	4

Larger sizes may be required based on required fire flow or service demand.

Permanent dead-end runs shall be no longer than 250 feet unless specifically approved by the City Engineer. Eight-inch mains shall be used on dead-end runs which serve fire hydrants. Reasonable looping of water mains will be required; the maximum unsupported length of a main is **1300** ft.

The following table may be used as a guide for maximum length (ft.) of dead-end mains:

Pipe Diameter	Required Fire Flow (gpm) 2000	3000	5000
6" lateral	100	N/A	N/A
8	600	275	N/A
10"	1800	850	325
12"	5000	2400	900

4.302 Design Pressure

The system shall be designed to maintain a minimum residual pressure of 20 psi at the service point or fire hydrant under the worst case of either:

- maximum day flows plus fire flow, or;
- peak hour flow

Calculations for individual developments may assume 4000 gpm at 45 psi is available at the point of connection to an 8" or larger, looped line. Other circumstances will require a spec determination by the City Engineer.

The Hazen-Williams formula should be used to calculate design flow, pressure loss, velocity and pipe diameter relationships. The coefficient of friction, "C", shall be 110 for pipes 6" and smaller, 120 for 8" and 10", and 130 for 12" and larger pipes unless loss at fittings is calculated separately using equivalent length or other approved methods. In such cases, a "C" of 130 may be used.

4.303 Slope

There are no slope requirements for water mains However, inverts and pipe slopes shall be shown on the profile plans as required in the Appendix.

All high points within the system shall be located at fire hydrants or permanent blow-offs

4.304 Vertical Alignment

The minimum cover on water mains shall be 3 feet. Water main depth should be kept below 5± feet

When crossing a wastewater or storm line, it is desirable that the water main be installed above with a clearance of 12 inches. The minimum vertical clearance per Standard Plan 415 shall be maintained.

4.305 Horizontal Alignment

Water mains shall be installed within street rights of way unless an easement installation is specifically approved by the City Engineer. Alignment shall be parallel to the street centerline wherever possible.

Parallel lines on each side of the street may be required on major arterials or other locations where crossings are determined inappropriate by the City Engineer.

The horizontal alignment of water lines in new streets, easements and private streets shall be as shown on the appropriate City of Lodi Standard Plan. In existing streets and other special cases (such as looped streets in which the utilities may be located concentrically to avoid crossings), the alignment may vary from the Standard Plans, but in no case shall there be less than 10 feet horizontal clearance to a wastewater, storm or industrial waste line, except as specifically approved by the City Engineer in accordance with State Department of Health Services policies.

When limited right-of-way or other controls are present reduced clearances per Standard Plan 415 may be approved by the City Engineer.

Curved water mains are allowed however, joint deflections or pipe curvature shall not exceed the pipe manufacturer's recommendations. The table in §2.305 may be used as a conservative guide If a shorter radius is desired, the appropriate design information (i.e. short pipe lengths, radius fittings, etc) shall be shown on the plans.

4.306 Pipe

The following standard pipe materials shall be used for water main construction and shall conform to the appropriate American Water Works Association standards (latest revision):

Pipe Material	Standard
Asbestos-Cement	AWWA C400, Class 150 minimum
Ductile Iron	A W A C151
w/cement mortar lining & seal (std thickness)	AWWA C104
polyethylene encasement*	AWWA C105
PVC (iron pipe O D .)**	AWWA C900, DR 18 (Class 150) minimum

+polyethylene encasement may be omitted if a corrosivity soils report provided per Appendix A of AWWA C105 indicates encasement is not needed

** PVC mains are not allowed in industrial and commercial areas if fire services are not installed at the time of main installation due to problems with hot-tapping installed mains. It is recommended that 8" combination hydrant/fire service taps be installed with the mains due to Fire Code requirements for sprinklers on commercial and industrial buildings

Trench and pipe strength design shall be shown on the plans per §5.700

4.307 Joints

Joints in water mains shall match the type of pipe being used, except:

- Solvent welded PVC is not allowed;
- Mechanical joints are only allowed at fittings;
- Cast-iron repair/adapter couplings may be used where approved by the City Engineer

4.400 Services

4.401 General

One service is allowed per parcel being served with the following general exceptions as specifically approved by the City Engineer:

- in residential developments with on-site public mains, one standard service per dwelling unit may be provided;
- in large parcels with separate buildings, one standard service per building may be provided (individual shut-offs per unit are required)

Due to the variety of building and main configurations and backflow requirements, the above requirements/exceptions are not specific. Details of each project shall be specifically approved by the City Engineer.

All commercial and industrial water services shall be metered. Residential services shall be metered in accordance with City Policies

4.402 Domestic Service

The minimum size service is 1 inch per Standard Plan 403. Larger diameter services shall be per Standard Plan 406 (1 1/2" & 2") and Standard Plan 407 (4" & larger). Size of services is to be determined by the design engineer for the parcel/land use being served subject to minimums contained in City Standards.

Backflow devices shall be provided on services as required by the Lodi Municipal Code and shall conform to the appropriate Standard Plan. Sufficient space shall be provided between the service box and the first downstream tee or cross to allow future addition of a backflow device.

4.403 Fire Service

Private on-site fire protection systems include hydrants and building sprinkler systems installed per the requirements of the City Building and Fire Codes. Fire and domestic systems shall be kept separate on-site, downstream of the service box and shall be valved such that either system can be shut-down without affecting the other These Standards cover requirements imposed by the Public Works Department in its role as a water utility, mainly in the area of backflow and cross connection prevention as required by State law In addition, the City Fire Department requires that the minimum design requirements and construction specifications for public water mains and fire hydrants be applied to private on-site fire protection systems.

Backflow requirements vary depending on the type of on-site system and the degree of hazard to the public system Standard classification of on-site systems is as follows:

Class I - Direct connections from domestic water mains only; no pumps or reservoir; no physical connections to other water supplies; no anti-freeze or other additives of any kind; and all sprinkler drains discharge to atmosphere.

No backflow device required.

Class II - Same as Class I, except that booster pumps are installed in the service lines from the public main. (An approved pressure sustaining valve is required on booster systems) A connection for a fire pumper truck (Fire Dept. Connection or FDC) may be provided. The Fire Dept, shall not introduce any additives nor draft from outside water sources.

No backflow device required.

Class III - Direct connection to public water main, with on-site storage or pressure tanks. All storage facilities must only be filled by or connected to the public water supply, and the water in these facilities must be maintained in a potable condition.

Double Check Valve Assembly (DC) required.

Class IV - Directly supplied from public mains similar to Classes I & II, with an unapproved auxiliary water supply on or available to the premises, or a Fire Dept. connection for trucks with additives or an outside supply.

Reduced Pressure Principle Assembly (RP) required.

Class V - Directly supplied from public mains and interconnected with unapproved auxiliary supplies, such as: pumps taking suction from reservoirs exposed to contamination, or from rivers, ponds, wells, or other industrial water systems; or systems where antifreeze or other additives are used.

Reduced Pressure Principle Assembly required.

Class VI - Systems supplied from both an industrial water system (private system) and the public system, with or without gravity storage or pump suction tanks.

Special Determination required.

Typical types of on-site systems and the backfiow requirements are described below:

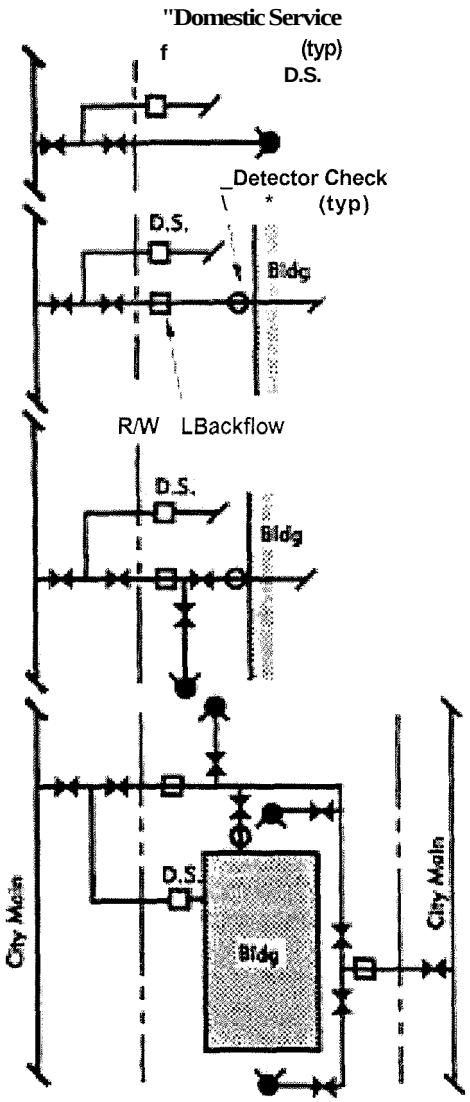

	Backfiow Device Required for Class:					
	i	i	j-	jy-	i	
Hydrants only; no sprinklers or other supply	None*	None*	N/A	N/A	N/A	NIA
Sprinklers only; no FDC or other supply	None*	None*	N/A	N/A	RP	NIA
Sprinklers and; hydrants w/FDC	None*	None*	DC	DC	RP	S..D
More than one connection to City system	DC*	DC*	DC	RP	RP	S.D

S.D.. = Special Determination

(Domestic service valves not shown)

* State law prohibits backfiow devices on Class I or II fire systems. Interpretation by the State Fire Marshall allow backfiow devices where "special conditions" exist. These special conditions include:

- Underground fire lines with less than 10 ft parallel clearance to wastewater lines or other pipelines carrying toxic materials.
- Water for one site is (or could easily be) looped to the public system.
- Occupancy involves use, storage or handling of type and quantities of materials in a manner which could present a significant health hazard to the domestic supply
- Premises having usually complex piping systems which already necessitate a backfiow device on the domestic service,

Additional Public Works Dept. requirements are:

- Backflow devices shall be approved by the City Engineer (USC Foundation for Cross Connection Control listing required) and the Fire Marshal (UL or FM listing required).
- Detector checks (i.e., bypass meter to detect unauthorized use) are required on building sprinkler systems; not on hydrant systems.
- Domestic service may be taken from fire service lateral outside the R/W and shall be kept completely separated from the on-site fire system.
- An approved pressure sustaining valve is required on all booster pump installations.
- An Encroachment Permit is required for any work or facility to be located in the right-of-way.
- Piping adjacent wastewater lines or other "special conditions" described above may require backflow devices on Class I and II systems or higher degrees of protection on other Class systems.

Fire Dept. requirements that are related to Public Works standards and specifications include the following:

- Sufficient on-site valves shall be provided to isolate individual hydrants and any sprinkler system.
- The location of all on-site facilities shall be approved by the Fire Marshal.
- Outside stem & yoke (OS&Y) or other approved indicator valves are required on building sprinkler and other above ground valves
- ^'.re tydrants, mains, valves and backflow devices shall be installed in accordance with City of Lodi Public Works Construction Specifications and Standard Plans.

The above requirements are general minimums and may be increased for unusual or other high hazard conditions. Owners may install devices providing a higher degree of protection, such as an air gap separation system (AG) in place of an RP device.

4.500 Valves, Fire Hydrants and Miscellaneous Appurtenances

4.501 Valves

Valves on mains shall be spaced and located in conformance with the following criteria:

- 400-foot maximum spacing in commercial, industrial and public use or other high value areas.
- 600-foot maximum spacing in residential areas.
- Water mains shall be valved on each side of railroad, freeway and canal right-of-way crossings. (These valves shall be located outside of the right-of-way being crossed unless easy access is provided)
- At "tees", valves are required as follows:
  - o 2 valves where one leg is less than 8 inches, with one of the valves being on the smaller leg. ° 3 valves where all legs are 8 inches or larger.
- At "crosses", valves are required as follows:
  - o 3 valves where one or more legs is less than 8 inches with valves on each of the smaller legs.
  - ° 4 valves where all legs are 8 inches or larger.,
- At ends of mains or on stubs such that future extensions will not interrupt service,
- No closer than 15 feet from a blow-off.

The above valve spacing requirements assume small lot sizes and numerous connections and may be reduced where there are a minimal number of connections in-between valves.

4.502 Fire Hydrants

Fire hydrants shall be designed and installed per Standard Plan 401. Where the main is located within 15 feet of the hydrant location, the valve on the hydrant lateral shall be located at least 5 feet offset from the hydrant station and the lateral installed with a 90° elbow, (ie. no short, straight hydrant laterals)

Fire hydrants shall be supplied from the largest available main.

Fire hydrants shall be fed from 2 directions unless specifically approved by the City Engineer and Fire Marshal

Public fire hydrant spacing and distribution shall be determined as follows:

- At 300 feet spacing in high density, commercial, industrial zoning or high-value areas;
- At 500 feet spacing in low density residential areas;
- On arterials, the above spacing shall apply to both sides of the street;
- A fire hydrant shall be located within 200 feet of the radius point of all cul-de-sacs;
- On-street hydrant spacinq may be reduced at reverse frontage locations or in coordination with on-site nydrants as approved by the Fire Marshal.

On-site private hydrants shall be located by the Fire Marshal

4.503 Blow-offs and Temporary Connections

Blow-offs per Standard Plan 404 shall be located at the ends of all permanent dead-end mains

Temporary blow-offs per Standard Plan 409 shall be located at the ends all dead-end mains planned for future extension and **4** inch and larger services per the appropriate Standard Plan.

The design of new mains shall include determination of the location and type (with or without meterlbackflow assembly) of temporary connections per Standard Plan 409. The meter/backflow assembly shall be located to provide optimal flow for main flushing and to minimize disruption of public traffic upon device removal. The meterlbackflow assembly is not required on new systems with less than 150 feet of 6 inch or larger pipe.

4.504 Thrust Blocks

Water main thrust shall be taken into account is designs. At locations planned for extension, flanged fittings may be required.

In areas with unstable soils, a special design for thrust blocks is required and shall be shown on the plans; Standard Plan 405 is sufficient in other areas.

Section 5 - Miscellaneous Requirements

5.100 Maps and Easements

5.101 Maps

Final Maps and Parcel Maps shall be prepared in conformance with State laws and City ordinances. Applicable certificates and statements shall conform to the appropriate Standard Plan. Final Maps shall be submitted to the County Surveyor for checking prior to filing with the City Engineer Parcel Maps shall be submitted directly to the City Engineer for checking and processing.

Records of Survey shall be prepared in conformance with State laws and shall be submitted to the County Surveyor for checking and processing

In order to expedite the review process, the City will accept maps to check easements and other City requirements prior to completion of the County technical review. Initial submittals shall consist of three copies of the map. Legal descriptions and title reports may also be required on the initial submittal. (Note, these Standards do not include all the applicable map and subdivision processing requirements, ie: improvement security, insurance, agreements, etc.)

Survey monuments shall be provided at all new lots/subdivisions per the following:

Location	Required Monument
Rear or Interior Lot Corner	5/8" dia. x 24" lg. iron rod at corner or offset if corner is obstructed.
Front (street) Lot Corner	5/8" dia. x 24" lg. iron rod at corner or chiseled cross in concrete offset from corner (show detail on map).
Street Right-of-way	3/4" dia. x 30" lg. iron rod with surveyor's mark at angle points and points of tangency.
Street Centerline	3/4" dia, x 30" lg iron rod with surveyor's mark in City Standard monument box at: (a) intersections of new and existing streets; (b) end of cul-de-sac; (c) points of tangency except where line of sight from other monument exists within the Right-of-way (the intent is to reduce the number of closely spaced monuments); (d) elsewhere, where line of sight is not practical due to length of curve or other obstruction.
Subdivision Boundary	3/4" dia x 30" lg. iron with surveyor's mark at corners. No monument is required at the intersection of street centerline and subdivision boundary.

The above are minimum requirements and are not intended to restrict or otherwise interfere with the judgement of Professional Engineers and Licensed Land Surveyors.

5.102 Easements

Public utility easements shall be shown on maps as required in these Standards and as part of development approval. If no map is involved or where specifically approved by the City Engineer, the easement may be granted by separate deed.

The width of all public utility easements shall be shall be as determined by the appropriate utility. For wastewater, storm and water lines, the minimum width is 8 feet. Additional width will be required for:

- lines larger than 15 inches;
- lines deeper than 5 feet;
- locations where the easement is not entirely on one lot;
- locations where multiple lines are installed within the easement.

Appropriate easements and temporary construction easements and/or limitations and conditions shall be shown on the plans. Particular attention should be given to trench excavations and existing trees and improvements to remain and future building foundations.

5.200 Improvement Plans and Specifications

All public improvements shall be shown on plans prepared by or under the direction of a Registered Civil Engineer except for minor work done under an Encroachment Permit or other circumstances approved by the City Engineer. Privately owned improvements may be shown for information, and in some cases, may be required to be shown to avoid conflicts. Distinction between public and private improvements shall be clearly indicated.

The design engineer shall contact electric, telephone, gas, cable TV and any other applicable agencies for locations of existing utilities which shall be shown on the plans. Plans for existing underground City water, wastewater, storm and traffic facilities shall be obtained from the office of the City Engineer. The design engineer shall field verify location and elevation of any existing facility affecting the design of the new improvements.

Plans shall be drawn on ANSI D (22" x 34") size vellum or mylar with City Standard title blocks per the Standard Plans. (The City will furnish preprinted vellum or AutoCAD® file upon request.) Sheet titles and drawing numbers will be assigned by City staff.

The Appendix contains additional information and requirements for improvement plans including:

- General Notes - required on plans;
- Bid Item Order - for improvement security estimate;
- Plan Submittal Checklist - indicates required items on plans which must be filled out and signed by the Engineer upon submittal of improvement plans;
- Wastewater flow calculation sheet (an Excel® spreadsheet file is available);
- Storm drainage calculation sheet (an Excel@spreadsheet file is available).

Since the plans will refer to City Construction Specifications, it is not required that the design engineer prepare additional specifications. However, in cases where the work is not adequately covered by the City Specifications, the plans shall provide the additional information necessary. If separate specifications are prepared, they shall be submitted for review and approval.

The plans shall identify required contractor submittals. These include:

- Asphalt mix design;
- Pipe materials and trench section to be used (when alternatives are allowed);
- Other agency rights-of-entry (list);
- Electrical and mechanical equipment;
- Any other item of work where alternatives are allowed or the Contractor wishes to do the work in a fashion other than as shown on the plans or as required by the City.

The design engineer is responsible for the design and accuracy of the plans The City check and approval does not relieve the owner/developer from changed or unforeseen conditions, errors contained in the plans or from complying with City, State, Federal or other agency requirements that may be determined to apply during the course of construction. In addition, owner/developer shall comply with any changes required by the City Engineer during the course of work that are necessary or required to complete the work in conformance with City Standards.

Rights-of-way, PUE's and construction easements shall be shown on the plans The developer/owner is responsible for obtaining such rights-of-way and easements subject to the provisions of §66462 5 of the Subdivision Map Act For work in the right-of-way of other agencies, the design engineer/owner shall obtain the permit or furnish the necessary information in order for the City to make the application if so required by the agency The appropriate permit conditions shall be included in the design, The plans shall include a requirement that the Contractor obtain a right-of-entry from the agency under the terms of the permit

Required utility relocations shall be shown or referenced on the plans as appropriate. Notes requiring the Contractor to arrange for utility relocations are discouraged since this generally delays the project.

Items to be salvaged and either reused or delivered to the City shall be clearly identified on the plans. Generally, any reusable sign, casting, metal barricade, or other item determined by the City Engineer shail be salvaged and delivered to the City per the Construction Specifications unless they are approved for reuse in the project

Completed San Joaquin County well and septic tank abandonment permits shall be submitted prior to City approval of the *y.^.* J 'or map. This requirement may deferred upon specific approval of the City Engineer if the facilities are in use and are needed during construction.

The plans shall include a requirement for project/job-site signing on projects over 2 acres is size or as required by the City Engineer on projects involving significant disruption of roadways. The sign shail include the names and telephone numbers of the contractor, project engineer/manager and developerlowner.

It is recommended that a pre-construction conference be conducted on all but minor projects. A City representative(s) will attend and the City will provide a meeting room upon request

5.300 As-built Plans and Certifications

The developer's engineer shall submit the following certifications, plans and other information prior to acceptance of the project:

- Certification that all monuments have been set as shown on the Final Map or Parcel Map;
- Certification that all public wastewater, storm and water lines located in public utility easements were placed within the limits of the easement as shown on the plans;
- Survey notes from a leveling survey of all benchmarks placed within the project. The survey shall start and close on the benchmark used in the design of the subdivision and shall close within 0.02 feet;
- As-built plans showing elevations of utilities and top of curb at all locations designed for future extension;

In addition, where construction problems or other indications exist that improvements are not located within the right-of-way as shown on the plans, the City Engineer may require a topographic or other survey.

The above certifications shall consist of a City Engineer approved letter, map, or other form, signed and stamped by the responsible Registered Civil Engineer or Licensed Land Surveyor, as appropriate.

5.400 Traffic Control

Applicable traffic control requirements shall be included in all plans. References to City and State of California Department of Transportation (Caltrans) specifications and standards are acceptable where the work is primarily not located with the travelled way of existing streets.

Street and lane closures will require specific details to be shown on the plans. Such details may include restrictions on the time of day and duration of work.

5.500 Soils Reports

Soils reports shall be provided for all improvements related to Final Subdivision Maps and may be required for other projects depending on the nature of the project and its location. The report shall include the following as applicable:

- Location map showing test locations and street layout;
- Statement regarding presence of critically expansive soils or other adverse soil conditions, which if not corrected, would lead to structural defects. Additional analytical work may be required depending on the initial findings;
- R-values per Caltrans test method 301; one test per 600+ feet of street or at locations of visible changes in material, with a statement that the depth of the sample is consistent with final subgrade depth based on the grading plan;
- Optimum moisture and diy density per Caltrans Methods 216 and 226 at each R-value test location;
- Soil corrosivity tests as appropriate where buried steel structures are proposed (such as lift stations) or per Appendix A of AWWA C104 where use of ductile iron pipe is proposed;
- Trench design values and recommendations (see $5.701);
- Applicable information required per Chapter 70 of the Uniform Building Code;
- Grading recommendations and specifications if more restrictive than these Standards.

The soils report shall be signed by a Registered Geotechnical Engineer and referenced on the plans and Map (if any) and appropriate measures incorporated into the design.

5.600 Grading and Earthwork

5.601 Grading Plans

Grading plans shall show existing and proposed contours (@ 0.5 foot maximum intervals) including sufficient information on adjacent property and improvements to review the adequacy of the design. A summary of earthwork calculations shall be provided upon request

The design shall comply with the appropriate street cross section, vertical alignment, minimum top of curb grade and driveway slope standards described in $1.300 and $1.410. As required by the Community Development Department, on-site low points (drop inlet catch basins) shall be a minimum of 6 inches above the calculated hydraulic grade line or the design maximum water surface of the Master Plan Storm Drainage Basin to which the project is tributary, whichever is higher (See §3.703 for these elevations)

Concrete, concrete block or other approved permanent retaining walls/curbs shall be provided where the difference in grade at the property line exceeds 6 inches. At a minimum, cut and fill requirements of the Uniform Building Code, Chapter 70 shall apply.

5.602 Dust Control

Dust control measures shall be addressed on the plans. The owner/developer is responsible for dust control throughout the project. While specific, detailed requirements have not been developed as part of these Standards, the San Joaquin County Air Pollution Control District (APCD) is in the process of developing dust control regulations which may apply to public and private improvement projects and may be implemented without formal change? * Standards.

5.603 Erosion Control

Erosion control measures shall be addressed on the plans. The owner/developer is responsible for erosion control throughout the project. Existing streets adjacent to the project shall be kept clean Measures such as construction vehicle access control, temporary berms/sandbags, material stockpile locations, sweeping schedules or other measures shall be shown on the plans. Specific performance requirements have not been developed as part of these Standards, however the Environmental Protection Agency (EPA) and the APCD are developing regulations which may apply to public and private improvement projects and may be implemented without formal changes to these Design Standards.

Dirt and construction debris shall be kept out of existing utility lines by plugging new connections until the new lines are cleaned. Appropriate notes and details shall be shown on the plans.

5.700 Trench and Pipe Strength Design

5.701 General

The design engineer shall coordinate the design of the trench and pipe strength with the soils investigation and the type of pipe materials proposed for the project. The design engineer may limit the number of materials for the project. Options for pipe materials and/or embedment materials may be provided, however, the plans shall clearly require the Contractor to make timely submittals on proposed materials and installation methods.

The Standard Plans for pipe material/class and embedment conditions may be referenced on the improvement plans when appropriate based on the soils report, depth of burial and other conditions. However, these Plans are very conservative in their assumptions; the design engineer may wish to submit calculations supporting less restrictive designs. (Most of the references cites show designs with significantly lower compaction requirements. These are not appropriate in streets or other areas where settlement is detrimental.) Supplementary details shall be provided on the plans as needed.

These Standards do not address construction equipment loads or compaction effort that may damage the pipe. The design engineer should review the soils report carefully for presence of material that will be difficult to compact and should consider specifying imported material in such cases. For shallow installations, specifying installation of pipe after street compaction is obtained should be considered.

The Standard Plans referenced below include the following assumptions:

- no control on maximum trench width (ie embankment soil load conditions);
- backfill weight = **130 lb/ft^3**
- H-20 traffic loading;
- impact load factor per the following table:

Impact Load Factor

Pice Dia *(it.)*	Death of Cover (ft.) 2	JL	4	5
1	1.3	1.0	1.0	1.
2	1.3	1.0	1.0	1.
3	1.3	1.0	1.0	1.
4	1.3	1.15	1.0	1.
5	13	1.2	1.1	1.

The primary references for trench design, in addition to the cited Standards, are "Gravity Sanitary Sewer Design and Construction" and "Buried Pipe Design".

5.702 Soils Investigation

Prior to design, trench conditions shall be investigated by borings, soundings, or test pits along the route of the trench. This soils investigation will include, but will not be limited to, testing to determine the unconfined compressive strength (ASTM D-2573) or penetration resistance (ASTM D-1586) of the trench soils. Results shall indicate whether trench conditions are stable or unstable. A stable trench is a trench that stands without caving or sloughing and has an unconfined compressive strength (ASTM D-2573) greater than 500 pounds per square foot or a penetration resistance (ASTM D-1586) greater than 8 blows per foot. All other soils shall be considered unstable.

Soils in the pipe zone shall be classified per the Unified Soil Classification System (ASTM D2487) and per the applicable embedment material classifications described in the appropriate ASTM standard for the pipe materials proposed for use in the project.

Where crushed rock pipe embedment is to be used, native soil gradation curves and a filter design shall be prepared (or filter fabric specified).

5.703 Flexible Pipe

Flexible pipe includes plastic, ductile iron and other pipe materials which will deflect at least 2% without structural distress. The design initial deflection limit for flexible pipe is 5% except as noted otherwise. The installation design incorporates superimposed load, soil prism load, soil stiffness in the pipe zone and pipe stiffness.

Flexible pipe trench sections per Standard Plan 501A are applicable for:

- 4" (thickness class 51) and 6" thru 14" (thickness class 50) ductile iron pipe;
- 4" thru 15" PVC ASTM 3034, SDR 35 pipe; and,
- 4" thru 14" AWWA C900, Class 150 PVC pipe

without special design. Based on the soils report, the design engineer shall design the pipe trench section and provide details on the plans or appropriate references to the Standard Plan.

5.703.1 Ductile Iron Pipe

Trench and pipe class design for ductile iron gravity sewer pipe shall be per ASTM A746 and City Standards. Trench and pipe class design for ductile iron pressure pipe for water and force mains shall be per AWWA G I50 and C151. Deflection for cement lined pipe shall be limited to 3%. Additional design information is contained in the Cast Iron Pipe Research Association Handbook, manufacturer's literature and other references cited in the Appendix.

5.703.2 Polyvinyl Chloride (PVC, ASTM D3034)

Trench design for PVC (SDR 35) pipe shall be per ASTM D2321 and City Standards. Additional design information is contained in the Uni-Bell Handbook of PVC Pipe, manufacturer's literature and other references cited in the Appendix.

Where the depth of cover is less than 3 feet, a special design is necessary to account for pipe flexibility and possible pavement damage

5.703.3 Polyvinyl Chloride (PVC, AWWA C900)

Trench design for PVC C900 pipe shall be per AWWA C900 and Manual M23 and City Standards. Additional design information is rcr*
literature and other references^ ..... ~

5.704 Rigid Pipe

Rigid pipe includes asbestos-cement, concrete, clay and other pipe materials in which deflection is not considered. The installation design incorporates superimposed load, pipe strength (usually three-edge bearing strength) and bedding factors. A safety factor of 1 5 is required on ultimate or crush load rated pipe; a factor of 1 0 is acceptable on 0.01 inch crack load pipe.

Special designs are required for rigid pipe with less than 3 ft. of cover. Appropriate materials and construction methods, such as special embedment, concrete encasement or requiring pipe installation after street compaction, shall be shown on the plans.

Rigid pipe trench sections per Standard Plan 501B & C are applicable for:

- 4" thru 14" AWWA C400 Class 150 asbestos cement pipe;
- 12" thru 30" ASTM C12 & C76 concrete pipe; and,
- 4" thru 30" ASTM C700 extra strength vitrified clay pipe

pipe without special design Based on the soils report, the design engineer shall design the pipe trench section and provide details on the plans or appropriate references to the Standard Plan.

5.704.1 Asbestos Cement Pipe (AWWA C400)

Trench and pipe class design for asbestos cement water pipe shall be per AWWA C401 and City Standards. Additional design information is contained in the manufacturer's literature and other references cited in the Appendix.

5.704.2 Concrete Pipe (ASTM C14, C76)

Trench and pipe class design for concrete pipe shall be per the pipe material ASTM specification, ASTM C12 and City Standards. Additional design information is contained in Concrete Pipe Handbook and Design Manual, manufacturer's literature and other references cited in the Appendix.

5.704.3 Vitrified Clay Pipe (ASTM C700)

Trench design for extra strength vitrified clay pipe shall be per ASTM C12, C700 and City Standards. Additional design information is contained in the Clay Pipe Engineering Manual, manufacturer's literature and other references cited in the Appendix.

Refer to City Construction Specification §6-19 04 "Excavation Safety" for additional requirements.

9. ALL TESTING for leakage or overdeflection shall be witnessed by a City inspector.
10. BALLING AND CLEANING of storm drain and sanitary sewers shall be done before interior video inspection. Utilities shall be kept clean until City acceptance.
11. STREET LIGHT SYSTEM shown on these plans is for reference only. The system shall be installed according to City Electric Utility Department plans.
12. BENCH MARK MONUMENTS furnished by the City shall be installed at locations shown or as directed by the City Engineer.

CONSTRUCTION NOTES (examples)

1. TV LOGS OF EXISTING MAINS will be prepared by the City of Lodi upon request of the Contractor prior to construction. Replacement of any underground mains damaged during construction of this project will be the responsibility of the Contractor.
2. R-VALUE TESTS shall be taken after grading to verify adequacy of structural section Sections shown are based on the R-values shown on the plans and are for bidding purposes only
3. A pre-construction conference will be held for this project The Contractor's job superintendent (and major subcontractor, if any - identify) shall attend
4. A project identification sign shall be installed at (describe location or show on plans) as shown below. The sign shall have (describe color, lettering - 2" high minimum - and material)

Rolling Glen Subdivision

brought to you by:

Lodi New Age Development
phone 333-3333

being built by:

Lodi Constructors International
phone 333-4444

project design by:

Lodi Engineering
phone 333-5555

A-1.3 Checklist

Normal plan drafting and miscellaneous requirements are listed below. The list is to be checked off by the design engineer and submitted with the initial submittal of the plans, except items noted * may be added after the first check, Incomplete plans will be returned without processing. Note that incomplete topography makes it impossible to adequately design and review improvement plans. City staff field review each project as part of the review process. Plans not showing existing improvements affecting the design will be returned.

This checklist is **not** a repeat or a listing of City Standards. The design engineer is still responsible for complying with these Standards in the design and preparation of improvement plans.

Appendix A

-1 Improvement Plan Requirements

A-1.1 General Requirements

After approval of the preliminary design, the design shall be incorporated into public improvement plans for the project, In general, the plans shall contain the following:

- Key/Title Sheet;
- Grading Plan;
- Civil Plans;
- Traffic Control and/or Striping Plans;
- Structural, mechanical, and electrical drawings for appropriate facilities;
- Specifications for materials and construction procedures for the portions of the project not already covered in the City Standard Construction specifications;
- Applicable soils investigation data;
- Required submittal list

Sheets may be combined or omitted depending on the size and complexity of the project

Itemized quantity listings (bid items) are not required to be sbown on the plans (See §A - 2 regarding bid items)

A-1.2 Plan Notes

The following general notes shall be included in all construction plans, modified as indicated for the particular project. Additional instructions or conditions related to contractual or other agreements between or among the owner/developer, design engineer and contractor shall be listed separately under a section titled "Special Conditions". Notes relating to specific portions of the work or special requirements shall be clearly keyed to the plan and grouped on each sheet under the heading "Construction Notes". Some typical construction notes are also shown below.

fiFNIFRAI NOTFfi

1. WORK SHALL CONFORM to City of Lodi Public Improvement Design Standards, Construction Specifications ana Standard Plans unless specifically shown otherwise on these plans.
2. STANDARD PLANS applicable to this project include:
   (list the following and any others that apply) 101, xxx
3. CONSTRUCTION STAKING for curb & gutter, wastewater lines, storm drains, water lines, street centerlines, paving edges and other public facilities as directed by the City shall be done by a Registered Civil Engineer or Licensed Land Surveyor.
4. CENTERLINE AND PROPERTY LINE DATA shall be obtained from (list City file number of final map, parcel map or record of survey as applicable).
5. EXISTING UTILITIES shall be protected. Utility agencies shall be notified and allowed to mark their utilities in the field at least 48 hours before excavation.

   <<<< CALL "USA" (800) 642-2444 >>>>

6. STREET AND LOT ROUGH GRADING shall be done before underground work.
7. UNDERGROUND UTILITIES in the street and sidewalk area shall be installed before construction of curb, gutter or sidewalk. These utilities include services, fire hydrant laterals, street light conduit, electric, gas, cable TV and telephone lines.
8. EXCAVATION SAFETY REQUIREMENTS include submitting a CAL OSHA permit or letter of notification to the City before commencing excavations over five feet deep.

Improvement Plan Checklist

- ☐ Sheet size and City of Lodi title block conforming **to Standard Plan 604**
- ☐ * RCE signature, stamp and expiration date
- ☐ North arrow (to top or right as appropriate)
- ☐ Scale (I" = 20', 1" = 40' or as needed for details and sections)
- ☐ Abbreviations and symbols conforming to Standard Plan 502 & 503
- ☐ Existing topography (including signs and striping) in project work area, field checked and accurately shown including the side of the street opposite the work to the curb (or right-of-way if no curb)
- D Reference plan drawing numbers shown (ie. "Ref. 88D124" for improvements from another project
- ☐ * Reference to adjacent sheet drawing numbers in the project set (ie. "See 91D090")
- ☐ Detail drawings as appropriate, particularly if conditions do not fit Standard Plans
- ☐ Repeated information consistent between sheets
- ☐ Grades shown consistently in percent or decimal form
- ☐ * "USA Call Before You Dig" sticker (City will furnish)
- ☐ "Construct", "install", "existing" and "future" items consistently noted
- ☐ * The phrase "work by others" is not to be used The appropriate party should be identified and the limits of such work clearly shown
- ☐ Distinction between public and private improvements clearly noted.

<u>Key/Title Sheet</u>

- ☐ General Notes per §A -1.2
- D Vicinity Map:
  - ° site location with major streets noted
  - north arrow
- ☐ Key Map (1"=100') with:
  - ° project boundary, street R/W & names
  - ° lot lines and lot numbers
  - ° * sheet drawing # references and limits
  - ° north arrow & scale
  - ° reference bench mark and "ones to be installed
  - o underground mains and above ground utilities
  - o main size and direction-of-flow between manhole
  - ° gutter direction-of-flow arrows and high point marker
  - ° street light locations
  - o boundary fencing location & type
- ☐ Typical Cross Sections (drawn looking up-station)
  - o street sections or table w/street name and stationing limits
  - ° pavement structural section including compaction
  - ° street names noted
  - ° back-of-walk to R/W treatment shown t
  - o trench sections or table reference to Standard Plan 501
- ☐ Miscellaneous
  - ° table of street segment, design R-value and traffic index
  - ° submittal listing
  - ° "Special Conditions" notes
  - ° dust control provisions
  - o *salvage items identified

- ☐ Existing and design grades or contours including adjacent property
- ☐ Locations of borings, R-value or other tests
- D Applicable soils report information
- ☐ Septic tank & leach field location and abandonment information
- ☐ Well location and abandonment information
- ☐ Irrigation risers & standpipes, size & direction on pipes; removal notes
- ☐ Retaining wall or other grade control details
- ☐ Erosion control details

* Put appropriate information on key or civil sheets if r.u ^

Civil - Strppt Plans

- ☐ City/County/State R/W boundaries as applicable
- ☐ Name of Street or Easement shown
- ☐ Names of intersecting streets and adjacent drawing #'s shown
- ☐ R/W lines identified
- ☐ Property lines & lot numbers
- ☐ Street dimensioned at end of sheet and at transitions
- ☐ Public utility & sight easements dimensioned
- ☐ Private & public utilities shown
- ☐ Existing utility crossings shown (gas, telephone, electrical)
- ☐ Transition pavement with flares at boundary limits
- ☐ Street signs at intersections
- ☐ Centerline survey monuments
- ☐ Horizontal curve data
- ☐ Existing poles, signs and structures; any required relocation noted
- ☐ Stationing shown west to east, south to north, left to right and bottom to top; no negative stationing
- ☐ Basis of stationing from City reference noted
- ☐ Equations at stationing crossings provided
- ☐ Street name at street intersections referenced
- ☐ Match lines shown, preferably at even stations
- D Stationing corresponds with subdivision map data
- D Offsets shown perpendicular to base of stationing
- ☐ * Streetlights, conduit and transformers per Electric Utility Dept, plans
- ☐ Curb, gutter & sidewalk:
  - o Standard Plan number for curb and gutter noted
  - o gutter direction-of-flow, high points & low points shown
  - o vertical to rolled 4 foot curb & gutter transition shown
  - o pavement strip removal and replacement at toe of gutter dimensioned and noted
  - o utility pole clearance dimensioned
  - ° handicap ramps »
  - ° asphalt ramps for sidewalk transitions where no sidewalk exists
  - o gutter pan detail shown if last asphalt concrete lift is postponed
  - o commercial, special & common driveways noted

Civil - Street Profile

- D Original ground grades shown
- Q Top of curb grades shown (flowline for curb & gutter replacements)
- ☐ Edge of pavement, street centerline and R/W grades shown if matching existing pavement
- ☐ Top of curb profile line
- ☐ Symbols at grade break & beginning and end of curves shown per Standard Plan 503
- ☐ Elevations shown at grade break, beginning & end of curve return, and point of intersection
- ☐ Vertical curve data

Unrierflrotinri Utilities Plan (General)

- ☐ Horizontal alignment of main dimensioned
- ☐ Main size and direction-of-flow between manholes shown
- ☐ Radius and stationing at main noted if not concentric with street centerline
- ☐ Services shown:
  - at corner lots and along curved right-of-way, services shall be shown and dimensioned to nearest lot line
  - for 1" water and 4" wastewater at standard location, services may shown with an abbreviated notation
  - larger services shall be shown and dimensioned to nearest lot line
- ☐ *Pipe markers installed at dead-ends or in fields
- ☐ Manholes are concentric or noted if eccentric (show orientation)

Unriernroiinri Utilities Profile- General

- ☐ Main:
  - length and size between manholes noted (length computed between inside edge of structure walls)
  - direction-of-flow arrows with slope shown and invert elevations noted
- ☐ Station, length, invert @ property line and size of laterals larger than minimum noted
- ☐ Pipe invert elevations shown at manholes, grade breaks, catch basins and ends of lines
- ☐ Existing utilities shown or approximated with note "verify depth and/or location in field before start of construction
- ☐ Crossings and horizontal alignment in accordance with City of Lodi Specifications and California State Health Standards noted
- ☐ Size, length and elevation of stubs noted
- ☐ Manholes:
  - station
  - size and type noted if other than standard diameter barrel
  - top of manhole elevation noted
  - "adjust to grade" for existing structures noted

Wastewater - Miscellaneous

- ☐ * Monitoring structures shown where required
- ☐ * Sand/grease traps shown where required

Storm Drain - Miscellaneous

- ☐ Drainage flow transition from project boundaries to existing flowline shown
- ☐ Grade break (if unavoidable) in lateral noted with distance to manhole noted
- ☐ * Sand/oil trap provided for on-site drainage per City requirements
- ☐ Catch basins installed at lot lines and 18" from curb returns

Wafpr - Misnpllanpnns

- ☐ Blind flanges with stubs at cross and tee for future extensions noted
- ☐ Valve on main provided no closer than 15 feet from temporary blow-off
- ☐ No services between last valve and temporary blow-off
- ☐ No services within 15 feet of permanent dead-end blow-off
- ☐ Fire Hydrants:
  - 0 hydrants located per Fire Dept fire hydrant plan & Standard Plan No 401 guidelines
  - o fire hydrant assembly or components itemization consistently shown
  - o lateral and valve oriented perpendicular to or parallel to face of curb
  - 0 elevations at top-of-curb or back-of-walk provided
  - 0 guard posts shown, if required

A - 2 Bid Item List

The following list is provided as a general guide for consistency in City projects and improvement security estimates Items used for each project will vary, but the order and units shall be followed, "incl." means payment for the item may be included in another item of work. The order is based on the order of the Caltrans Standard Specifications with some minor exceptions. The final listing shall be numbered.

Item	Units
Dust Control	LS or Hour
Traffic Control	LS
Removal of...(list as needed)	LS, EA or incl
Abandon ... (well, septic system, or other; list as needed)	LS or EA
Salvage .. (list as needed)	EA
Clearing and Grubbing	LS
Rough Grading	CY
Roadway Excavation	CY
Excavation Safety	LS
Compact Original Ground (Roadway)	SF
Concrete Subgrade Compaction	SF
Imported Borrow	CY or TON
Irrigation System (system or itemize pipe,* valves*, etc)	LS, LF, or EA
Landscaping (list turf or type as appropriate)	LS or SF
Trees (list by type, size*)	EA
Clean-up or Finishing Roadway	LS or incl.
Aggregate Base (AB), Class 2	TON or SF **
Liquid Penetration Treatment	TON
Pavement Reinforcing Fabric	SY
Asphalt Concrete (AC) (list by aggregate size*, may separate type, i.e. overlay, transition, etc.)	TON or SF **
Asphalt Concrete Leveling Course	TON
Pavement Repair	SF
Pavement Grinding (list by depth, width or type per plan table)	LF or SF
Steel Structures (list as appropriate)	EA or LS
Painting (list as appropriate)	EA or LS
Storm Drain Pipe (list *)	LF
Storm Drain Manhole/Riser (list *)	EA
Sand/Oil Trap	EA
Adjust Existing SD Manhole to Grade	EA
Furnish SD Frame & Cover	EA
Wastewater Pipe (list *)	LF
Wastewater Service (list *)	EA
Wastewater Cleanout (in not included in service price)	EA
Wastewater Manhole/Riser (list *)	EA
Wastewater Trap (list *)	EA
Adjust Existing WW Manhole to Grade	EA
Furnish WW Frame & Cover	EA
Curb & Gutter (& Sidewalk) (differentiate type, width as appropriate)	LF
Sidewalk	SF
Commercial Driveway	LF or SF
Special Driveway	LF or SF
Alley Approach	SF
Tree Well	EA
Sign Post (list by height,* type)	EA
Mowstrip (or other misc. concrete items)	LF

Side Inlet Catch Basin	EA
Drop Inlet Catch Basin	EA
Survey Monument (list*)	EA
Adjust Existing Monument Frame to Grade	EA
Furnish Survey Monument Frame and Cover	EA
Water Main (list *)	LF
Water Valve (list *)	EA
Water Service (list *)	EA
Backflow Assembly (list *)	EA
Fire Hydrant (specify either assembly w/valve & lateral or by individual components)	EA
Permanent Blow-Off	EA
Temporary Blow-Off (list *)	EA
Temporary Connection (with/without meter)	EA
Adjust Existing Water Valve Frame to Grade	EA
Furnish Water Valve Frame & Cover	EA
Fence (list *)	LF
Dead-end Barricade (Fence type)	LF
Traffic Striping (list *)	LF
Traffic Legend/Marking (list *)	EA
Pavement Marker (list *)	EA
Street Light (list")	EA
Traffic Signal and Lighting System	LS
Signs (list *)	EA

* indicate size and class/strength/type as appropriate, largest diameter or size first.

** AB and AC quantities are normally in TONS but may be in SF for minor work and subdivision improvement contracts.

ITY OF LODI

JBLIC WORKS DEPARTMENT

PROJECT _____ __P_roject Name _____
(Limits of Project, etc.)

BBB SHEET NO.

CHECKED BY DATE JOB NUMBER 91x009

WASTEWATE FLOW CALCULATIO

d Use).	Area Acres	Average Cf6 per Acre	Flows Total cfs	Cumu Resid. Non'R. cfs	lative Resid Pop. pers	Peak Facto	Peak Flow cfs	Total Flow cfs	Dia in.	Pipe Slope ft./ft.	Len. ft.	Full Cap. cfs	Pipe Vel. fps	Peak Depth d/D	Flow Vel. fps	Invert Elev. up/dn ft.	Top of Curb Elev. ft.	Remarks
R-1	10.0	0.00186	6.02	0.02	120	"473	0.08											
C-2	10.0	0.00387	0.04	0.04		3.0	0.12	0.20	8"	0.0033	500	0.70	2.0	0.38	1.7	32.15	36.50	
R-HD	5.0	0.01238	0.06		640	470	-6740	0.51								30.50	36.25	
R-1	10.6	0.00186	0.02	0710 "6.64		376	0.12		10"	0.0025	500	1.10	2.0	0.47	1.9	30.33		
																29.08		

WW CALC

Lodi Design Standards 52.000

CITY OF LODI

PUBLIC WORKS DEPARTMENT

PROJECT _Eroject Name_____
(Limits of Project etc..)

BY BBB

SHEET NO.

CHECKED BY

DATE

JOB NUMBER Y 1X009

STORM DRAINAGI CALCULATIC

Use Vode	Area Acres	C Facto	AC	Sum of AC	T.C. min.	I "/hr.	Q cfs	Dia in.	HGL Slope ft./ft.	Pipe Slope ft./ft.	Length ft.	Vel. fps	Flow Time min.	HGL fall ft.	Invert Elev. up/dn ft.	HGL Elev. ft.	Top of Curb Elev. ft.	Remarks
					12	1.15	13.8											
-1	10.0	0.40	4.0	~T2ir				24	0.00371	0.00075	700	4.4	Z./	2.60	29.00	33.60	35.00	Initial T.C. = 10 m gutter/1.5 fp6/60 s
	10.0	0780	8.0															
-HD	5.0	0.50	2.5			1.02	25.3								28.48		36.50	(Note: Need to ve
-1	5.0	0.40	2.0	-249	15			36	0.00143	0.00044	700	3.6	3.3	1.00	27.48	31.00		above top of pipe (partial depth flow
	20.0	0.42	8.4												27.17	30.00		provided.)

of Lodi Design Standards §3.000

SD CA

A - 5 References

Advances in Pipeline Materials. Jey K. Jeyapaian, Civil Engineering, July 1990 (This recent article raises some interesting points about the state of design practice in the United States, including soil stiffness discrepancies)

A Guide for the Installation of Ductile Iron Pipe. Ductile Iron Pipe Research Association, 1978

American Society for Testing and Materials. (ASTM), various standards as cited, latest revision unless otherwise specified by the City Engineer; a list of cited standards is available from the City Engineer

American Water Works Association. (AWWA), various standards and manuals as cited, latest revision unless otherwise specified by the City Engineer; a list of cited standards is available from the City Engineer

A Policy on Geometric Design of Highways and Streets. American Association of State Highway and Transportation Officials (AASHTO), 1984

Buried Pipe Design. A P Moser, Mc-Graw Hill, 1990 (This is an up-to-date reference that summarizes many of cited references and contains design examples.)

Citywide Circulation Study. TJKM Transportation Consultants, Final Report July 20,1990

Clay Pipe Engineering Manual. National Clay Pipe Institute, July 1982

Concrete Pipe Design Manual. American Concrete Pipe Association, 5th printing (revised) June 1980

Concrete Pipe Handbook. American Concrete Pipe Association, January 1980

Design and Construction of Sanitary and Storm Sewers. American Society of Civil Engineers Manual and Report on Engineering Practice - No. 37, Water Pollution Control Federation Manual of Practice - No 9,1969 (second printing, 1976) (Note, while the portions of this manual covering gravity pipe design are largely superceded by ASCE Manual No, 60, this manual contains applicable information on pumping facilities)

Design and Performance of PVC Pipes Subiected to External Soil Pressure. Moser, Watkins & Shupe, Buried Structure Laboratory, Utah State University, February 1977 (This research paper contains much of the background material used in later references)

Design of Urban Streets. Federal Highway Administration (FHWA), Report #80-204, as updated and republished by the California Institute of Transportation Studies and used in their University of California extension course of the same name

Draft General Plan. Jones & Stokes, various documents and dates including the Draft Environmental Impact Report, April 1990 and the Draft Policy Document

Ductile Iron Pipe and Cast Iron Pipe Handbook. Cast Iron Pipe Research Association, 4th Edition, 1976 (While this handbook contains some text on history and design considerations, it mainly consists of American National Standards Institute (ANSI) standards which may be superceded by other standards These ANSI standards are usually conumbered as a corresponding AWWA standard.)

Flexible Pavement Structural Section Design Guide for California Cities and Counties. League of California Cities, 1973 (Includes information and examples on calculation of traffic index from truck wheel load data)

Gravitv Sanitarv Sewer Design and Construction. American Society of Civil Engineers Manual and Report on Engineering Practice - No. 60, Water Pollution Control Federation Manual of Practice - No. FD-5,1982

Guidelines for Drivewav Design & Location. Institute of Transportation Engineers (ITE), Proposed Recommended Practice, ITE Technical Committee 5B-13,1985

Handbook of PVC Pipe Design and Construction. Uni-Bell PVC Pipe Association, 2nd Edition March 1982

Highway Capacity Manual. Transportation Research Board, 1985

Highway Design Manual. California Department of Transportation (Caltrans), 4th edition & per latest updates issued by Caltrans

Introductory Soil Mechanics and Foundations. Sowers & Sowers, Macmillan, 3rd edition, 1971

Residential Streets. American Society of Civil Engineers, National Association of Home Builders and Urban Land Institute; 2nd Edition 1990 (While this reference contains useful general information on design, the various minimum design standards, particularly those for street width, are considered inappropriate for Lodi)

Review of (Draft) Sanitary Sewer Design Standards. Ron Heinzen, (Kleinfelder), correspondence January 21. 1988

Sanitarv Sewer System Technical Report for the 1990 General Plan Update. Black & Veatch, 1990 Traffic

Manual. California Department of Transportation (Caltrans), per latest updates issued by Caltrans

Transportation and Traffic Engineering Handbook. Institute of Transportation Engineers, 2nd edition, 1982

Trip Generation. Institute of Transportation Engineers, 4th edition, 1987

Water Master Plan. Psomas & Associates, 1990

Work Area Traffic Control Handbook (WATCH Manual), BNi Books, 7th edition, 1990

CITY OF LODI

PUBLIC WORKS DEPARTMENT

PROJECT	%
BY	SHEET NO. OF
CHECKED BY DATE	JOB NUIVBER

WASTEWATER FLOW CALCULATIONS

Land Use, Zoning Location, Node I.D.	Area Acres	Average cfs per Acre	Flows Total cfs	Cumu lative Resid. Non R. cfs	Resid Pop. pers	Peak Facto	Peak Flow cfs	Total Flow cfs	Dia in.	Pipe Slope ft./ft.	Len. ft.	Full Cap cfs	Pipe Vel fps	Peak Depth d/D	Flow Vel fps	Invert Elev. up/dn ft.	Top of Curl Elev. ft.	Remarks
Reference: City of Lodi-De	ign-St	andards-	000—															WW_CALCS.XLS J

CITY OF LODI

CONSTRUCTION SPECIFICATIONS

SECTION 6 SPECIAL PROVISIONS
Index

*6-01 DESCRIPTION OF WORK

"6-02 QUANTITIES

"6-03 MATERIALS

*6-04 SCHEDULING PROJECT WORK 6-
04.01 Scheduling Work
6-04.02 Contractor's Cooperation with Other Work 6-04.03 Beginning of Work, Time of Completion and Liquidated Damages

*6-05 CONSTRUCTION RIGHT-OF-WAY/PERMITS
6-05.01 Right-of-way 6-05.02
Special Permits 6-05.03
Building Permits

6-06 SPECIFICATIONS 6-06.01 General 6-06.02
Work for Developers and Others

6-10 DUST CONTROL
6-10.01 Dust Control and Watering

6-12 TRAFFIC CONTROL
6-12.01 Traffic Control

6-15 EXISTING FACILITIES
6-15.01 Protection of Existing Facilities
6-15.02 Removal Methods
6-15.03 Abandon Facilities
6-15.04 Adjusting Facilities to Grade
6-15.05 Salvaged Materials

6-16 CLEARING AND GRUBBING

6-19 EARTHWORK
6-19.01 Roadway Excavation
6-19.02 Pipe and Structure Excavation and Backfill
6-19.03 Slurry Cement Backfill
6-19.04 Excavation Safety
6-19.05 Compaction
6-19.06 Imported Borrow

6-20 SPRINKLERS AND LANDSCAPING
6-20.01 Sprinkler Systems - General
6-20.02 Sprinkler System Materials
6-20.03 Sprinkler System Installation
6-20.04 Turf - General
6-20.05 Turf - Sod
6-20.06 Turf - Seeded
6-20.07 Planting - General
6-20.08 Planting Materials
6-20.09 Planting Operations

6-22 CLEAN-UP

6-26 AGGREGATE BASE

* Not included in public copies of these Specifications

" in margin indicates revision

6-36 PENETRATION TREATMENT
6-36.01 Liquid Asphalt Penetration Treatment

6-39 ASPHALT CONCRETE
6-39.01 General
6-39.02 Pavement Reinforcing Fabric
6-39.03 Street Paving
6-39.04 Trench Replacement and Shoulder Paving
6-39.05 Asphalt Concrete Leveling Course
6-39.06 Pavement Repair

6-42 PAVEMENT GRINDING

6-55 STEEL STRUCTURES
6-55.01 General
*6-55.02 Picnic Shelter Structural Steel, Metal Decking, Fasteners and Roof

6-59 PAINTING
6-59.01 General *6-59.02
Painting Details

6-62 STORM DRAINS

6-62.01 General

6-63 CAST-IN-PLACE CONCRETE PIPE 6-64

ASBESTOS CEMENT STORM DRAIN PIPE

6-65 PRECAST CONCRETE PIPE
6-65.01 General 6-
65.02 Jacked Pipe

6-66 CORRUGATED METAL PIPE

6-70 MANHOLES AND MISCELLANEOUS FACILITIES
6-70.01 Manholes

6-71 SANITARY SEWERS 6-71.01 General 6-71.02
Leakage Tests 6-71.03 Vitrified Clay
Pipe (VCP) 6-71.04 Polyvinyl Chloride
Pipe (PVC)

6-72 SLOPE PROTECTION
6-72.01 Rock Slope Protection

6-73 CURBS, SIDEWALKS AND MISCELLANEOUS CONCRETE
6-73.01 General

6-76 DOMESTIC WATER FACILITIES
6-76.01 General 6-76.02
Materials 6-76.03
Installation 6-76.04
Testing

6-80 FENCES
6-80.01 General
6-80.02 Chain Link Fence

6-84 TRAFFIC STRIPES 6-

85 PAVEMENT MARKERS

*6-86 SIGNALS AND LIGHTING
6-86.01 General
6-86.02 Contract Submittals
6-86.03 Maintaining Existing Systems
6-86.04 Installation
6-86.05 Foundations
6-86.06 Standards, Steel Pedestals and Posts
6-86.07 Conduit
6-86.08 Pull Boxes
6-86.09 Conductors and Wiring
6-86.10 Bonding and Grounding
6-86.11 Service
6-86.12 Testing
6-86.13 Galvanizing and Painting
6-86.14 Solid-state Traffic Actuated Controller
6-86.15 Emergency Vehicle Pre-Emption
6-86.16 Vehicle Signals
6-86.17 Pedestrian Signals
6-86.18 Detector
6-86.19 Pedestrian Push Button
6-86.20 Luminaires
6-86.21 Signs
6-86.22 Traffic Signal Payment

*6-110 TENNIS COURT RESURFACING

6-141 WATER WELL ABANDONMENT
6-141.01 Permits, Certificates, Laws and Ordinances
6-141.02 Specific Well Details
6-141.03 Abandonment of Wells
6-141.04 Additional Site Work
6-141.05 Concrete
6-141.06 Cement Grout

Revised September 1989

REFERENCES TO THE "STANDARD SPECIFICATIONS" REFER TO THIS PUBLICATION:

STANDARD PLANS

STATE OF CALIFORNIA BUSINESS,
TRANSPORTATION AND HOUSING AGENCY
DEPARTMENT OF TRANSPORTATION

JULY, 1992

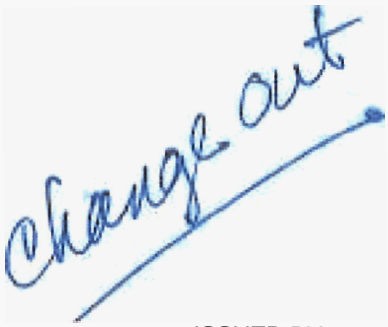

ISSUED BY
DEPARTMENT OF TRANSPORTATION

Current price for additional copies of this
book may be obtaind by writing

STATE OF CALIFORNIA DEPARTMENT OF
TRANSPORTATION GENERAL PUBLICATION
DISTRIBUTION UNIT
1900 ROYAL OAKS DRIVE
SACRAMENTO, CALIFORNIA 95819
Telephone (916)445-3520

6-06 SPECIFICATIONS 6-

06.01 General

Section 6-10 through 6-95 of these Specifications (Special Provisions) correspond with the State of California Department of Transportation Standard Specifications. Not all the Sections are used. Therefore, there are gaps in the numbering sequence. Sections used contain either:

- o Changes from the Standard Specifications o Additions to the Standard Specifications
- o Repetition of the Standard Specifications for clarity and/or emphasis

Revised April 1986

6-06.02 Work for Developers and Others

a) These Specifications shall govern work done within the Right-of-way and Public Utility Easements under the following circumstances:

- o Work done for subdividers and developers under the terms of a development agreement or encroachment permit;
- o Vlork done by public utilities or their contractors, however nothing in these Specifications shall be construed so as to conflict with or reduce requirements of the State of California General Orders governing such utility work.
- o Work done by private parties or others.
- o Work done for the City of Lodi not done under formal contract.

b) All work shall be in accordance with applicable portions of the Standard Specifications. Attention is directed to the following Sections:

Section 1 "Definitions and Terms"
Section 4 "Scope of Work"
Section 5 "Control of Work"
Section 6 "Control of Materials"
Section 7 "Legal Relations and Responsibilities

c) Definitions and Terms shall be as described in Section 1 "Definitions and Terms" of the Standard Specifications and the following:

Engineer - The City Engineer of the City of Lodi, California or his authorized representatives.

Contractor, Developer or Subdivider - As used in these specifications, the Contractor, Developer or Subdivider shall mean that person, firm, corporation, partnership, company, agency or association who causes land to be divided into a subdivision in accordance with the City of Lodi Subdivision Ordinance and who has entered into or executed a contract and/or agreement with the City of Lodi, providing for the completion of all improvements in connection with a subdivision duly filed with, and approved by the City Council of the City of Lodi, or who has been granted a valid encroachment permit to do work within public rights of way or public utility easements.

Construction Specifications - Where reference is made to Construction Specification it shall mean this set of specifications,

Standard Specifications - In these Specifications, or on the plans, where reference is made to Standard Speicfications or to the Standard Specifications, State of California, it shall mean the STANDARD SPECIFICATIONS, State of California, Department of Transportation, latest edition.

Whenever in the Standard Specifications the following terms are used, they shall be understood to mean and refer to the following:

Department - Public Works Department of the City of Lodi.

City - The City of Lodi, California

Director of Public Works - Public Works Director and City Engineer of the City of Lodi.

Engineer - The City Engineer of the City of Lodi, California or his authorized representatives.

Contractor, Developer or Subdivider - As defined above.

Laboratory - The designated materials laboratory authorized by the City Engineer to test mterials and work.

State - The City of Lodi, California.

d) Plans and Specifications on Job Site - A complete approved set of plans and specifications shall be kept on the job site and available at all times. Nonavailability shall be deemed as cause for temporary suspension of the work.

e) Lines and Grades All distances and measurements are given and will be made in a horizontal plane unless otherwise noted.

The Contractor shall furnish all facilities and work necessary to provide location of the proposed improvements.

Three consecutive points shown on the same rate of slope must be used in common, in order to detect any variation from a straight grade. The Contractor shall be responsible for any error in the finished work.

All stakes and points set for lines, grades, or measurements of the work shall be preserved in their proper places until their removal is authorized by the Engineer.

Section 5-1.07 "Lines and Grades" of the Standard Specifications shall be deleted unless otherwise specified.

f) Inspection shall be in accordance with Section 5-1.08 "Inspection" of the Standard Specifications and these Special Provisions.

Whenever the Contractor varies the period during which work is carried on each day he shall give due notice to the Engineer, so that proper inspection may be provided. Any work done in the absence of the Engineer will be subject to rejection.

Projects financed in whole or in part with state or federal funds shall be subject to inspection at all times by representatives of the Agencies involved or their agents.

g) Responsibility for Damage and Work The City of Lodi, the City Council, the City Engineer shall not be answerable in any manner for any loss or damage that may happen to the work or any part thereof, or for any material or equipment used in performing the work; or for injury or damage to any person or persons, either workmen or the public; for damage to adjoining property from any cause whatsoever during the progress of the work or any time before acceptance of the work by the City Council.

The City of Lodi, the City Council and the City Engineer shall be indemnified and save harmless from any suits, claims, or actions brought by any person or persons for or on account of any injuries or damages sustained or arising in the construction of the work or in consequence thereof.

Except as provided above, until the formal acceptance of the work by the City Council or the City Engineer, the City of Lodi shall not have the charge and care thereof and shall not bear the risk of injury or damage to any part thereof by the action of the elements or from any other cause, whether arising from the execution or from the nonexecution of the work. All injuries or damages to any portion of the work occasioned by any of the above causes before final acceptance shall be rebuilt, restored and made good at no expense to the City of Lodi, except such injuries or damages occasioned by acts of the Federal Government or the public enemy.

h) No Personal Liability Neither the City Council, the City Engineer, nor any other officer or authorized assistant or agent shall be personally responsible for any liability arising under the Agreement.

i) Responsibility of City The City of Lodi shall not be held responsible for the care or protection of any material or parts of the work prior to final acceptance, except as expressly provided in these specifications.

j) Work Within Right-of-way of Others The Contractor shall make aTl arrangements with the appropriate agencies for all work to be performed within the agencies right-of-way and the Contractor shall conduct the work in accordance with any and all of the requirements of the agency involved,

The Contractor shall pay the cost of all fees, bonds, permits, licenses and other requirements in connection with work within the right-of-way of the other agencies.

k) Contractor's Cooperation with Other Work The Contractor's attention is directed to the fact that Pacific Gas and Electric Company, Pacific Telephone Company, Lodi Cable TV, and the City of Lodi and/or their contractors may be installing facilities within the project limits and during the construction of the work; it shall be the Contractor's responsibility to contact these agencies to ascertain their schedules of work.

It shall be the Contractor's responsibility to schedule and coordinate his work with other contractors so there is the least amount of conflict during all phases of construction. The Contractor is also responsible for making all necessary agreements with the other agencies that might be required during construction.

1) Measurement and Payment shall be in accordance with the Contract or Agreement between the appropriate parties. Measurement and payment sections in these specifications are those normally used by the City of Lodi in its Contracts and are included for reference only.

Revised April 1986

6-10 DUST CONTROL

6-10.01 Dust Control and Watering Dust control and watering shall conform to the provisions in Sections 10 "Dust Control" and 17 "Watering" of the Standard Specifications and these Special Provisions,

At the request of the Contractor, water for dust control and project construction will be furnished by the City of Lodi without cost to the Contractor. Water is available from fire hydrants within the project boundaries at the locations shown on the plans. The Contractor shall furnish and use City approved hydrant wrenches.

Necessary precautions to prevent dust nuisance shall be taken during all phases of construction, on non-working days, and to final acceptance of the work.

Payment for dust control and watering shall be considered as included in the various items of work and no additional compensation will be allowed therefor.

Revised Dec. 1985

6-12 TRAFFIC CONTROL

6-12.01 Traffic Control Traffic control shall conform to Section 12 "Construction Area Traffic Control Devices" of the Standard Specifications and these Special Provisions. Attention is particularly directed to the "MANUAL OF TRAFFIC CONTROLS FOR CONSTRUCTION AND MAINTENANCE WORK ZONES" published by Caltrans. Nothing in these Specifications is to be construed as to reduce the minimum standards set in said manual.

Traffic shall be maintained at all times as provided in these Special Provisions except as otherwise approved by the Engineer.

(Insert appropriate wording)

The Contractor will be required to keep all residents and businesses notified of the work schedule as it. affects their access.

The Contractor shall maintain contact with the City Electric Utility Department dispatch office regarding start and completion of the following:

- Construction activity that may impede emergency vehicles, school buses, etc.
- Construction activity such as trenches or other excavation that prohibit access.
- Construction activity that removes a fire hydrant from service.

The Contractor shall provide the name and telephone number of a person directly responsible for the construction activity. The dispatcher will notify Lodi Police and Fire Departments, Life Medical Paramedic Ambulance Service, and Lodi Unified School District. The phone number is:

(209) 368-5735

The City will furnish "No Parking" signs which shall be posted by the Contractor.

The Contractor shall be responsible for supplying, installing and maintaining such fences, barriers, lights, signs and flaggers as are necessary to give adequate warning to the public at all times that the road or street is under construction and of any dangerous conditions to be encountered as a result thereof.

All traffic control equipment shall be removed when it is no longer required.

Upon request, the Contractor shall submit to the Engineer a sketch showing the proposed signing and barricading to be used in the project.

All existing warning, regulatory, and information signs shall be maintained in a visible location during all phases of the construction by the Contractor.

If it becomes necessary for the City of Lodi to replace or place additional barricades in order to provide adequate safety to the public, the Contractor will be charged $1.00 per barricade per day or portion thereof plus the cost of placement and removal. The Contractor will also be charged for replacement of damaged City barricades. The Contractor shall furnish and place barricades within three working days. No removal charge will be made if the Contractor returns City barricades to the Municipal Service Center.

Full compensation for furnishing all labor, materials, tools, equipment and incidentals for doing all work involved in furnishing and placing barricades, warning devices, and for flaggers as may be required by the Engineer shall be considered as included in the price paid for the various items of work, and no additional compensation will be allowed therefor.

Revised Oct. 1989

6-15 EXISTING FACILITIES

6-15.01 Protection of Existing Facilities Protection of existing facilities shall conform to all the applicable provisions in Section 8-1.10 "Utility and Non-Highway Facilities: and Section 15 "Existing Highway Facilities" of the Standard Specifications, and, these Special Provisions.

All known obstructions to the work are indicated on the plans. However, the City cannot guarantee the accuracy of this information. The Contractor will be held responsible for the maintenance and protection of or damage to existing facilities, structures, obstructions and all underground facilities shown on the plans or brought to the Contractor's attention during the course of the work.

The Contractor shall notify owner agencies for locations of utilities or facilities prior to excavation.

The owning utility shall be immediately notified of any damage which is caused by the operations of the Contractor to any facility, utility or structure. At the owning utilities' discretion, repairs shall be made by the Contractor at the owning utilities' direction or by the utility, all to the satisfaction of the Engineer.

The Contractor's attention is called to the fact that the existing storm drain lines and sanitary sewers may be carrying miscellaneous drainage and sanitary sewage. The necessary steps shall be taken to prevent flooding of the trench, structure and/or excavations where ties and removals of the storm drain system and sanitary sewer are made.

At connections to existing facilities, approved means of preventing sand and debris from entering the existing lines shall be provided.

Payment for protection of existing facilities shall be considered as included in the price paid for the various items of work and no additional compensation will be allowed therefor except as provided in the Standard Specifications.

Revised April 1986

6-15.02 Removal Methods Removal of existing improvements shall conform to Section 15-2 "Miscellaneous Highway Facilities", these Special Provisions and as shown on the Plans.

All portions of existing concrete to be removed shall be removed in a smooth, neat, vertical plane. Where expansion, contraction or construction joints are not present, the concrete shall be saw cut to a minimum depth of 1-1/2 inches. If an expansion, contraction or construction joint is within 3 feet of the concrete to be removed, the concrete shall be removed to that joint.

Prior to final paving, all portions of existing pavement to be removed shall be cut on a neat, straight line. Pavement removed outside the removal line shall be cut parallel to and at right angles to the removal line. The face of the cut shall be smooth and shall not overhang the removal area. Drop hammers are not allowed. Jackhammers may be used if the cuts are overlapped and meet the above criteria. Where edges of remaining pavement are raised by the removal method used, they shall be flattened with a mechanical tamper prior to setting frames or replacing pavement.

Where an excavation leaves less than two feet of pavement adjacent to the gutter, the remaining pavement shall be removed and replaced.

All removed material, unless otherwise specified, shall become the property of the Contractor and shall be disposed of outside of the right-of-way in accordance with the provisions in Section 7-1.13 "Disposal of Material Outside the Highway Right of Way" of the Standard Specifications.

Payment for removal of existing improvements shall be in accordance with Section 15-2.07 "Payment" of the Standard Specifications.

Revised June 1988

6-15.03 Abandon Facilities Existing facilities shall be abandoned as shown on tn-e plans and in accordance with these Special Provisions.

Existing manholes, where shown on the plans to be abandoned, shall be abandoned, in accordance with Section 15-2.05A "Frames, Covers, Grates and Manholes" of the Standard Specifications.

Frames and covers may be retained by the Contractor.

Existing storm drains and utility pipe lines, where shown on the plans to be abandoned, shall be abandoned in place or at the option of the Contractor, shall be removed and disposed of. All resulting openings into existing structures that are to remain in place shall be plugged with commercial quality concrete.

Abandoning storm drains and pipe lines in place shall conform to the following:

Storm drains and pipe lines that intersect the side slopes shall be removed to a depth of not less than 3 feet, measured normal to the plane of the finished side slope, before being abandoned.

Storm drains and pipe lines less than 24 inches in diameter shall be removed or crushed in place, unless otherwise shown on the plans.

Storm drains and pipe lines, 24 inches in diameter and larger, shall be backfilled with sand by any method, acceptable to the Engineer, which completely fills the pipe. Sand backfill material shall be clean, free draining, and free from roots and other deleterious substances.

The ends of storm drains and pipe lines shall be securely closed by a 0.5-foot thick tight fitting plug or wall of commercial quality concrete containing not less than 470 pounds of cement per cubic yard.

Storm drains and pipe lines shall not be abandoned until their use is no longer required. The Contractor shall notify the Engineer in advance of any intended storm drain or pipe abandonment.

Existing catch basins, where shown on the plans to be abandoned, shall be abandoned. Covers and grates may be retained by the Contractor. The top portion of the catch basins shall be removed to a depth of 3 feet below finished grade.

Payment for abandoning facilities shall be in accordance with Section 15-2.07 "Payment" of the Standard Specifications.

Revised Dec. 1985

6-15.04 Adjusting Facilities to Grade Miscellaneous facilities shall be adjusted to grade in accordance with these Special Provisions,

Upon completion of paving, the Contractor shall adjust all utility frames and miscellaneous facilities to within 1/8-inch of finished grade and shall conform to Standard Plan 123 and the Plans. Water valve frames shall be adjusted to grade within 48 hours after paving is completed.

All damaged or non-conforming frames and covers shall be replaced with new frames and covers conforming to City Standard Plans. Undamaged and conforming frames and covers may be reused. Unused frames and covers may be retained by the Contractor.

(Use following two paragraphs in lieu of above paragraph when appropriate bid items are provided.)

All frames and covers shall be replaced with existing frames and covers except as noted on the plans. Existing broken and non-conforming frames and covers shall be brought to the Engineer's attention at the time of removal. Frames and covers lost or broken by the Contractor shall be replaced at no expense to the City. Unused frames and covers may be retained by the Contractor.

The contract price for replacement of frames and covers shall only include the cost of furnishing the new frames and covers indicated on the plans or as otherwise approved by the Engineer. The contract price for adjustment to grade shall apply to both reused and new frames and covers.

Payment for adjusting facilities to grade shall be in accordance with Section 15-2.07 "Payment" of the Standard Specifications.

Revised November 1986

6-15.05 Salvaged Materials All materials to be salvaged shall be delivered to the Municipal Service Center, 1331 S. Ham Lane, Lodi, CA 95240, during the hours of 8:00 a.m. to noon or 1:00 p.m. to 4:00 p.m.

Payment for delivering salvaged materials shall be considered as included in the price paid for the various items of work and no additional compensation will be allowed therefor.

Revised Dec. 1985

6-16 CLEARING AND GRUBBING

6-16.01 Clearing and Grubbing Clearing and grubbing shall conform to the provisions in Section 16 "Clearing and Grubbing" of the Standard Specifications and these Special Provisions.

Clearing and grubbing shall include all those areas to be improved within the construction limits shown on the plans.

All vegetable growth, buried logs, trees shrubs, concrete, abandoned miscellaneous facilities and any other objectionable material shall be removed or crushed in place, if applicable, to a depth of not less than 6 inches below any compacted material or as directed by the Engineer.

Payment for clearing and grubbing shall be in accordance with Section 16-1.06 "Payment" of the Standard Specifications.

Revised Dec. 1985

6-19 EARTHWORK

6-19.01 Roadway Excavation Roadway excavation shall conform to the provisions in Section 19 "Earthwork" of the Standard Specifications and these Special Provisions.

The roadway excavation shall conform to the line and grades shown on the plans. The compaction requirements for this work shall attain a minimum relative compaction of 95 percent for a minimum depth of 6-inches.

In the event there is surplus excavation, it shall become the property of the Contractor and shall be disposed of outside of the right-of-way in accordance with the provisions in Section 7-1.13 of the Standard Specifications.

All unsuitable material shall be removed and replaced with material on the site as the Engineer may direct.

The contract price paid for roadway excavation shall include full compensation for cutting and removal of existing asphalt concrete, removal and disposal of surplus excavation at a site provided by the Contractor, and shall include the required excavation, grading, and compaction within the work limits as shown on the plans, and specified under these Special Provisions and no additional compensation will be allowed therefor.

The quantity of roadway excavation shall be considered as a final pay quantity, as specified in Section 9-1.015 "Final Pay Quantities" of the Standard Specifications, and no additional compensation will be provided for except when changes have been ordered by the Engineer.

Revised April 1986

6-19.02 Pipe and Structure Excavation and Backfill Excavation end backfill for pipe, manholes and miscellaneous structures shall conform to the provisions in Section 19.3 "Structure Excavation and Backfi11" of the Standard Specifications and these Special Provisions.

Pavement and concrete removal shall conform to Section. 6.15-02 "Removal Methods" of these Special Provisions,

All excavation shall be made to the lines and grades shown on the plans. Trench edges shall be no closer than 1 foot to the toe of the gutter unless otherwise approved by the Engineer. Where mud, peat or any unstable or objectionable materiel is encountered at or within 6 inches of the bottom of any excavation, such material shall be removed to a depth of at least. 12 inches below the established grade and the trench brought, to grade by placing a suitable material thoroughly compacted in place, all as approved by the Engineer.

Trench width, bedding and backfill for pipe shall conform to "Pipe Bedding end Backfill Requirements", Standard Plan 501. The bedding shall be Class C or better unless otherwise specified on the plans.

Plastic marking tape, 6" wide, shall be buried 18" to 24" below finish grade over any uti1ity main located outside of the street/sidewalk ares, The tape shall be color coded blue for water lines and green for itewater and drainage lines. The tape shall have black lettering with appropriate "caution" wording and shall be approved by the Engineer.

Ponding or jetting of backfill is not allowed unless specifically shown on the plans.

Trench backfill shall attain a relative compaction of 90 percent. Backfill compaction within the structural section shall be as shown on the plans. Structural backfill around all structures and manholes may be made with native material and shall attain a relative compaction of 92 percent.

Backfill in street areas shall be brought to subcrade and the existing surfacing shall be replaced with the structural section shown on the plans.

Trench backfill shall be accomplished as soon as possible after the pipe has been installed, and in existing streets there shall be no more than 200 feet of open and/or uncompacted ditch at the end of the working day, unless otherwise specified by the Engineer.

The Contractor shall conduct the construction operations so that trench backfill at all intersections is sufficiently adequate to allow two-way traffic in both directions during all phases of construction unless otherwise specified.

Payment for pipe and structure excavation and backfill shell be considered as included in the price paid for the various items of work requiring excavation and backfill end no additional compensation will be allowed therefor,

Revised September 1989

6-19.03 Slurry Cement Backfill Slurry cement backfill shall be used only where shown on the plans or required in the Special Provisions or as specifically approved by the Engineer. It shall conform to Section 19-3.062 "Slurry Cement Backfill" of the Standard Specifications.

Payment for slurry cement backfill shall be considered as included in the price paid for the various items of work requiring slurry cement backfill and no additional compensation will be allowed therefor.

Revised April 1986

6-19.04 Excavation Safety Excavation Safety shall conform to th"e provisions Tn Sections 5-1.02A "Trench Excavation Safety Plans", and 7-1.01E "Trench Safety" of the Standard Specifications and these Special Provisions.

In making excavations for the project, the Contractor shall be fully responsible for providing and installing adequate sheeting, shoring and bracing as may be necessary as a precaution against slides or cave-ins and to fully protect all existing improvements of any kind from damage.

The Contractor shall obtain a permit from the Division of Industrial Safety and shall submit a copy of approved permit to the Engineer prior to the start of excavation. The cost of the permit shall be included in the total bid cost. If the shoring and bracing plan varies from the shoring system standards established by the Construction Safety Orders, the plan shall be prepared by a registered civil or structural engineer.

The criteria given by the California Department of Industrial Relations are MINIMA for the conditions shown thereon. In addition to shoring the excavation as specified, it shall be the Contractor's responsibility to provide any and all additional shoring required to support the sides of the excavation against the effects of loads which may exceed those derived by using the criteria set forth by said governing agency. The Contractor shall be solely responsible for any damages which may result from his failure to provide adequate shoring to support the excavations under any or all of the conditions of loading which may exist or which may arise during the construction project.

The contract price paid per lump sum for excavation safety shall include full compensation for furnishing all labor, materials, permit and equipment and for doing all work involved as specified under these Special Provisions and no additional compensation wi 11 be allowed therefor.

Revised April 1986

6-19.05 Compaction Subgrade preparation shall conform to all applicable parts of Section 19-5 "Compaction" of the Standard Specifications and these Special Provisions.

(a) Compact Original Ground

Unless otherwise shown on the plans, compaction requirements for compacting original ground shall be a minimum relative compaction of 92 percent for a minimum depth of 8 inches and the limits shall conform to those shown on the plans.

Any material that is disturbed below the "compact original ground" shall be compacted to a minimum of 90 percent.

(b) Miscellaneous Concrete Subgrade Compaction

The relative compaction of subgrade for all curb, gutter, sidewalk and driveways shall conform to these Special Provisions and to the requirements designated on the plans.

The miscellaneous concrete subgrade shall be graded to conform to the lines and grades shown on the plans. The compaction of the subgrade for miscellaneous concrete shall attain a minimum relative compaction of 90 percent for a minimum depth of 8 inches and 12 inches for commercial driveways.

Any organic Material or other unsuitable material found in the subgrade shall be removed and replaced with an acceptable material, as approved by the Engineer.

Concrete shall not be placed upon the subgrade until the subgrade has been approved by the Engineer. Finish grade shall be within 1/4 inch of plan grade.

(c) Payment (Use appropriate paragraphs)

Payment for compaction shall be in accordance with Section 19-5.06 "Payment" of the Standard Specifications.

The contract price paid per square foot for compacting original ground shall include full compensation for furnishing all labor, materials, tools and equipment, and for doing all the work involved in compacting original ground as shown on the plans and as specified under these Special Provisions and no additional compensation will be allowed therefor.

The contract price paid per square foot for miscellaneous concrete subgrade compaction shall

include full compensation for furnishing all labor, materials, tools and equipment, and for doing all the work involved in compacting and grading the concrete subgrade as shown on the plans and as specified under these Special Provisions, and no additional compensation will be allowed therefor.

Revised April 1986

6-19.06 Imported Borrow Imported borrow shall conform to Section 19-7 "Borrow Excavation" of the Standard Specifications and these Special Provisions.

Payment for imported borrow shall be in conformance with Section 19-7.05 of the Standard Specifications.

Revised April 1986

6-20 SPRINKLERS AND LANDSCAPING

6-20.01 Sprinkler Systems - General Sprinkler systems shall be furnished and installed in accordance with these Special Provisions and as shown on the plans, including any incidental work not shown or specified which can reasonably be inferred as part of the work, and necessary to provide a complete and workable system.

The work includes:

1. Trenching and backfill;
2. Sprinkler material and equipment installation;
3. Maintenance and guarantee of irrigation system for one year;
4. Installation of sprinkler controller, conduit and wiring.

(a) "As-Built" Sprinkler Drawings The Contractor shall prepare an "As-Built" drawing on a blueline print which shall show deviations from the Bid Documents made during construction affecting the main line pipe, controller locations, valves and sprinkler heads. The drawing shall be delivered to Inspector before final acceptance of work.

A map diagram showing location of valves, lateral lines and route of the control wires shall be prepared by the contractor. The diagram shall identify valves as to size, station, number and type of planting irrigated, i.e., shrubs or ground cover. The diagram shall be submitted to Engineer for review and approval.

(b) Guarantee Work shall be guaranteed for one (1) year from date of acceptance against all defects in material, equipment and execution. Guarantee shall also cover repair of damage to any part of the premises, resulting from leaks or other defects in material, equipment and execution to the satisfaction of the City.

Repairs, if required, shall be done promptly upon notification by City at no cost to City.

(c) Existing Site Conditions Contractor shall become acquainted with all site conditions. Should utilities not shown on the plans be found during excavations, Contractor shall promptly notify the Inspector for instructions as to further action. Failure to do so will make Contractor liable for any and all damage thereto arising from Contractor's operations, subsequent to discovery of such utilities not shown on plans,

Minor adjustments to the sprinkler system layout shall be made as may be required to work around existing construction at no additional cost to the City.

(d) Payment The contract price paid for sprinkler system shall include full compensation for furnishing all materials, labor and equipment to complete the work and no additional compensation shall be allowed therefor.

Revised April 1986

6-20.02 Sprinkler System Materials Materials throughout the system shall be new and in perfect condition. After award of the contract and prior to beginning work, Contractor shall submit for review six (6) copies of the complete list of materials which Contractor proposes to install. Quantities of materials and equipment need not be included. No deviations from the Specifications shall be allowed. The decision of City shall be final in the determination of the quality of materials and equipment.

(a) Plastic Pipe shall be polyvinyl chloride pipe (PVC) conforming to Section 20-15B(1) "Plastic Pipe Supply Line" of the Standard Specifications and these Special Provisions. The class shall be as follows:

In Turf Areas and Planters

1/2" - Class 315 PVC 3/4" - Class 200 PVC 1" and larger - Class 160 PVC

Main Line Piping or Pipe under constant pressure

2" and larger - Class 200 PVC Piping Under

Slabs, Foundations and Paving All sizes - Sen.

40 PVC

Plastic fittings - Schedule 40 PVC as manufactured by Sloane, Lasco, or equal.

(b) Valves shall conform to the following:

Gate valves 3" and smaller shall bronze, Class 125 or 150 with threaded ends, non-rising stem, O-ring stem gasket or teflon impregnated asbestos packing and handwheel operator. Gate valves shall be Stockham, Mueller, Kennedy or as supplied with backflow prevention assemblies.

Remote Control Valves shall be as specified on the drawings.

Backflow Assemblies shall be as specified on the drawings.

(c) Miscellaneous Materials shall conform to the following:

Solvent cement shall be compatible with PVC pipe material and size and be of proper consistency. No mixing of solvent with thinner will be allowed Primers shall be used as recommended by the solvent manufacturer.

Control wires shall be 24 volt solid wire U.L. approved for direct burial in ground. (Black #14 UF direct lead and white #12 UF common ground.) 110 volt wire shall be 2-#12, CU, THW, one black, one white,

Sprinkler heads sha11 be of the manufacture specified in legend on Drawings.

Valve keys shall be furnished for adjusting remote control valves. (2 - 30" keys)

Valve boxes shall be furnished for each control valve. Boxes shall be Ametex 12" meterbox with lid marked, "Irrigation," or approved equal.

Quick couplers shall be as indicated on the Drawings.

(d) Controller shall be Irri-trol Model MC-4 with P-1 pedestal or Rain Bird Model RC-LS.

6-20.03 Sprinkler System Installation

(a) Layout shall be done as accurately as possible to conform to the Plans. The Plans, though carefully drawn, are generally diagrammatic to the extent that swing joints, offsets and all fittings are not shown. Job conditions will not always permit locating piping, valves and heads where shown. When this situation occurs, it shall be brought to the Inspector's attention. The Contractor will be held responsible for the relocating of any items without first obtaining Inspector's approval.

(b) Excavating and trenching required for the installation of the work included under this Section, shall be performed as prevent cave-ins, including shoring of earth banks to installations, etc. All surfaces, existing underground, damaged or cut as a result of the

excavations shall be restored to their original condition.

Trenches shall be made with enough width to allow a minimum of 4" between parallel pipe lines. Trenches for pipe lines shall be made of sufficient depths to provide the minimum cover from finish grade as follows:

1. 18" over main lines to remote control valves;
2. 12" over lateral lines to heads;
3. 24" under paved parking areas or roads.

(c) Pipe and fitting assembly shall be done in a workmanlike manner in accordance with the manufacturer's recommendations. Remote control valves shall be installed where shown and grouped together where practical and shall be placed no closer than 12" and parallel to walk edges, buildings and walls. Boxes shall be set with tops matching finish grade.

Pipe and fittings shall be thoroughly cleaned of dirt, dust and moisture before applying primer and solvent.

IMPORTANT - Excess solvent shall be cleaned off. Solvent welded joints shall be cured at least 15 minutes before moving or handling, and at least 24 hours before water is permitted in the pipe.

Pipe may be assembled and welded on the surface. Pipe shall be shaken from side to side of trench to allow for expansion and contraction.

Connections between plastic pipe and metal valves or steel pipe with threaded fittings shall be made using plastic male adapters. A non-hardening pipe dope (Rector seal or teflon tape) shall be applied to male threads.

(d) Sprinkler Heads Openings in the pipe shall be capped or plugged to prevent entry of debris. Lawn heads shall be set flush with finished grade or curb and paving,

(e) Flushing and testing shall be done after all new sprinkler piping is in place. A full head of water shall be used to flush out the system with all heads removed. After the system is thoroughly flushed, risers shall be capped off and the system pressure tested.

All sprinkler lines upstream of remote control valves shall be tested for a period of not less than 2 hours

and shall show no leakage or loss of pressure. Test pressure shall be 100 psi.

Unless otherwise directed by the Engineer, testing shall be accomplished by openings at the high points of the system and blowoffs at all deadends. The valve controlling the admission of water into the section of pipe to be tested should be opened slowly and fully before closing the hydrants or blowoffs. After the system has been filled with water and all air expelled, all the valves controlling the section to be tested shall be closed, and the line remain in this condition for a period of not less than 24 hours.

The pipe shall then be refilled, if necessary, and subjected to the specified pressure for a period of two hours.

All sprinkler lines downstream of remote control valves shall be tested under system pressure. Any observable leaks shall be repaired. Minor leakage at swing/swivel joints is acceptable.

All leaks that are found shall be immediately corrected and the system again subjected to the same test.

All repairs of any damage to the pipes and their appurtenances, or to any other structures, resulting from or caused by these tests, shall be performed by the Contractor as the Engineer may direct, all without cost to the City of Lodi.

At the conclusion of the pressure tests, the heads shall be installed and tested for operation in accordance with design requirements under normal operating pressure.

(f) Backfill and compaction shall be done after required tests and inspections have been made. Backfill shall be made with clean soil, free of rocks and other material that may damage the pipe.

Backfill for all trenches, regardless of the type of pipe covered, shall be compacted to 85% density except where otherwise shown on the Plans.

Backfill shall be dressed off to match finish grades.

Settling of backfilled trenches which may occur during a one (1) year period after acceptance, shall be repaired by the Contractor, including the complete restoration of damaged planting, paving or other improvements of any kind.

(g) Automatic control wiring shall be installed with sprinkler mains and laterals in a common trench wherever possible. Wires shall be a minimum of 1" from any pipe or fitting except at terminal points. Slack shall be provided at valves and wires shall be snaked in trenches to allow for contraction of wires. Tie wires in bundles at 10' intervals with plastic electrical tape.

Control wire splices will be allowed only on runs more than 500 feet. Wires shall be crimped together with Star-Kon #PT-70 connector and sealed with Scotchlok #3576 sealing pack.

(h) Electrical service shall be located and installed as shown on the Plans and shall conform to the provisions of Section 20-5.027E "Service" of the Standard Specifications. The Contractor shall install conduit and wire to the point of connection. Conduit shall conform to the provisions of Section 86-2.05A "Material" of the Standard Specifications.

Revised November 1986

6-20.04 Turf - General Turf shall be furnished and installed with these Special Provisions and as shown on the Plans. Subgrade condition and grading shall be approved by the Engineer prior to turf installation,

(a) 90-Day Maintenance Period The Contractor shall be completely responsible for the general maintenance of the entire sprinkler system and the turf for a minimum period of ninety days from the time of first watering.

During this maintenance period, any required repairs or adjustments to the sprinkler system shall be made without additional compensation.

The Contractor will be required to adequately water the sod, fill low spots, replace unsuitable growth, or do weed control and other work, as determined necessary by the Engineer, during the 90-day maintenance before final acceptance of the contract.

Mowable weeds and grasses shall be kept mowed off before they exceed two inches in height. Clippings shall be removed unless otherwise approved by the Engineer. The planted areas shall be maintained in a neatly mowed condition at all times.

Working days upon which no work will be required, as determined by the Engineer, will be credited as one of the maintenance days, regardless of whether or not the Contractor performs work.

Working days when the Contractor fails to adequately perform plant establishment work, including but not limited to watering planted area, mowing, filling low spots, replacing unsuitable growth, or controlling weeds, determined to be necessary by the Engineer, will not be credited as one of the maintenance days.

At the end of the 90-day maintenance period, the stand of grass to be acceptable shall be weed free and have no more than 3 percent of the total area in bare spots which shall close in at maturity and produce a full coverage turf. Unacceptable areas shall be reseeded.

(b) Cleanup and Final Inspection - Final inspection for approval and acceptance shall be made at the conclusion of the maintenance period. Prior to being considered for inspection, the Contractor shall have performed, within the entire project limits, a final weeding, mowing and clearing of all the debris so as to present the work in a neat and orderly appearance.

(c) Imported borrow (topsoil shall conform to the provisions of Section 20-2.01 "Topsoil" of the Standard Specifications.

The contract price paid per cubic yard for imported borrow shall include full compensation for furnishing, transporting, placing, grading and compacting, and doing all the work as shown on the Plans and Specifications and no additional compensation wi11 be allowed therefor.

Revised November 1986

6-20.05 Turf-Sod

(a) Sod bed preparation and fertilization shall conform to the applicable provisions of Section 20-3 "Erosion Control" of the Standard Specifications and these Special Provisions,

Soil amendment shall be added at one (1) inch in depth to existing soil. The existing soil with soil amendment shall be cultivated to a depth of three (3) inches and all clods and lumps shall be broken up or removed. The area shall be raked to remove all debris of any kind. Grading and shaping refinements shall be performed to bring surface to true uniform sloping planes free from irregularities and to provide proper and adequate drainage to designated collection points.

Soil amendments shall be Red or Fir compost mix (Marley Company) or equal with 1% nitrogen except as otherwise approved by the Engineer.

After placing imported borrow and sprinkling and when the soil is friable, the Contractor shall cultivate and cross cultivate the entire area to a depth of six inches. Fertilizer shall then be applied in the amount of 42 pounds of nitrogen, 21 pounds of phosphorus and 42 pounds of potassium per acre (14-7-14 at 7 pounds per 1,000 square feet) and worked into the soil during this cultivating process.

At the end of the 90 day maintenance period, one-half of the above named amount shall again be applied.

If foreign material is exposed by the cultivation, it shall be immediately removed from the area.

When the soil has reached a condition of good tilth, the entire area shall be finish graded with a suitable implement to produce a sod bed which is smooth, uniform and ready for planting. All rocks, clods, etc., over one inch in diameter shall be removed from the upper two inches of soil.

(b) Sod shall be weed free, viable, and of the type shown on the Plan. A written certification of the sod shall be furnished upon the request of the Engineer, and no placing of sod shall be allowed prior to approval by the Engineer.

(c) Sod installation shall be done with closely fitted joints, and the ends of the strips shall be staggered. On irregular shaped areas, sod shall be laid in both directions from the longest straight line that can be drawn through the area. Sod shall be rolled after an initial watering to eliminate irregularities. Immediate initial watering is very important to sod survival. Do not over irrigate causing a spongy soil condition.

The Contractor shall be responsible for such protection of the turfed area as necessary to prevent trespassing.

(d) Payment - The contract price paid for turf-sod shall include full compensation for furnishing all labor, materials, tools and equipment, cultivating, preparing the soil, placing sod, grading, soil amendment, maintenance, fertilizers, and for doing all work involved in placing sod as shown on the plan and specified under these Special Provisions, and no additional compensation will be allowed therefor.

6-20.06 Turf-Seeded

(a) Seed Bed Preparation and Fertilization The seed bed preparation and fertil ization shall conform with the applicable parts of Section 20 of the Standard Specifications and these Special Provisions.

Soil amendment shall be added at one (1) inch in depth to existing soil. The existing soil with soil amendment shall be cultivated to a depth of three (3) inches and all clods and lumps shall be broken up or removed. The area shall be raked to remove all debris of any kind. Grading and shaping refinements shall be performed to bring surface to true uniform sloping planes free from irregularities and to provide proper and adequate drainage to designated collection points.

Soil amendments shall be Red or Fir compost mix (Marley Company) or equal with 1% nitrogen except as otherwise approved by the Engineer.

After the sprinkler system is installed and before seed bed cultivation, the Contractor shall thoroughly clean the area of all foreign material such as rocks, rubble, sticks, roots, wire and any other objectionable material as the Engineer may direct.

After sprinkling and when the soil is friable, the Contractor shall cultivate and cross cultivate the entire area to a depth of six inches. Fertilizer shall then be applied in the amount of 42 pounds of nitrogen, 21 pounds of phosphorus and 42 pounds of potassium per acre (14-7-14 at 7 pounds per 1,000 square feet) and worked into the soil during this cultivating process.

At the end of the 90 day maintenance period, one-half of the above named amount shall again be applied.

If foreign material is exposed by the cultivation, it shall be immediately removed from the area.

When the soil has reached a condition of good tilth, the entire area shall be finish graded with a suitable implement to produce a seed bed which is smooth, uniform and ready for planting. All rocks, clods, etc., over one inch in diameter shall be removed from the upper two inches of soil.

The Contractor's attention is directed to the fact that during final grading, the entire area shall be sloped to drain to the existinq catch basins. The Contractor is responsible for eliminating all low spots by regrading or filling during the final grading and maintenance period.

The Contractor shall not plant seed until the bed has been approved by the Engineer.

(b) Seed Turf seed shall be weed free, viable, of the following mix:

40% Manhattan Perennial Rye Grass or approved equal, 98% purity, 90% germination rate;

20% Creeping Red Fiscue, 97% purity, 85% germination rate;

40% Newport Blu Kentucky Bluegrass, 98% purity, 87% germination rate;

All seed shall be Blue Tag certified.

Seed shall be brought to the job in suitable bags bearing the dealer's label. A written certification of the seed shall be furnished upon the request of the Engineer, and no seeding shall be allowed prior to approval of the seed by the Engineer.

(c) Turf Seeding The Contractor shall sow the seed during a windless period by an approved method at the rate of not less than 300 pounds per acre. After seeding, the area shall be rolled with a ring-type roller or an equivalent approved piece of equipment to insure the seed being covered with soil to a depth no greater than 1/4-inch The seeded area shall be free of any excessive ridges or depressions so as to insure proper surface drainage. Watering of the seeded area shall be done slowly but thoroughly.

At the Contractor's option, seed may be sown using the hydromulch method. The equipment and procedure shall be submitted prior to seeding for approval by the Engineer.

The Contractor shall be responsible for such protection of the seeded area as necessary to prevent trespassing.

(d) Payment The contract price paid for turf-seeded shall include full compensation for furnishing all labor, materials, tools and equipment, cultivating, preparing the soil, seeding, grading, maintenance, and for doing all work involved in seeding areas shown on the Plans and specified under these Special Provisions, and no additional compensation will be allowed therefor.

6-20.07 Planting - General Planting shall consist of furnishing and installing planting materials including preparing planting areas, planting and establishing plants and other

incidental work in accordance with the applicable provisions of Section 20-4 "Highway Planting" of the Standard Specifications, these Special Provisions and the details shown on the Plans.

Payment for planting shall be included in the contract price paid per each for trees and shall include full compensation for furnishing all labor, materials, tools and equipment involved in excavating, preparing the soil, placing the trees, staking, fertilizing, backfilling, and for doing all the work involved in placing trees as shown on the plan and specified under these Special Provisions, and no additional compensation will be allowed therefor.

Revised April 1986

6-20.08 Planting materials shall conform to the requirements of the Plant List on the plans and to "Horticultural Standards" of the American Association of Nurserymen as to kind, size, age, etc.

Plant names used in the plant list conform to "Standardized Plant Names" by American Joint Committee on Horticulture Nomenclature, except in cases not covered therein. In these instances, the custom of the nursery trade is followed.

Substitution will not be permitted unless approved by the Engineer.

All plants shall be sound, healthy, vigorous, free from plant disease, insect pests or their eggs, and shall have healthy normal root systems and comply with all State and local regulations governing these matters, and be free from any noxious weeds.

Plants shall not be pruned prior to delivery except as authorized by the Engineer. In no case shall trees be topped before delivery.

All plant materials shall be subject to approval of size, health, quality and character by the Engineer.

Where caliper or other dimensions of any plant materials are omitted from the Plant List, it shall be understood that these plant materials shall be normal stock for type listed.

Plant material larger than those specified may be supplied in complying in all other respects and at no additional cost to City.

Plant materials shall be symmetrical, and/or typical for variety and species and conform to size specified in the Plant List.

All plant materials shall be provided from a licensed nursery or other source which has been previously inspected by the County Horticultural Department and shall be subject to acceptance as to quality by the Inspector.

Plant stakes shall be two (2) inch diameter lodgepole pine and 10 feet in length.

Plant ties shall be reinforced rubber straps, one (1) inch wide by ten (10) inches long, with a 1/8 inch minimum thickness. Rubber straps shall have double wire ties 12 inches long at each end of strap.

Fertilizer tablets shall be 21 ounce size with a composition of 20-10-5 nutrient mix of nitrogen, phosphate and potash unless otherwise shown on the plans.

6-20.09 Planting Operations All plants shall be planted, staked, and tied according to the details shown on the plan.

Trees shall be thoroughly watered immediately after planting.

In the event that underground construction work or obstructions are encountered in excavation of the tree holes, alternate locations will be selected by the Engineer.

All Trees shall be pruned to remove broken and damaged limbs and branches.

Revised November 1986

6-22 CLEAN-UP

Clean-up shall conform to the provisions in Section 22 "Finishing Roadway" of the Standard Specifications and these Special Provisions.

Upon completion of the work, and prior to requesting final inspection, the work area shall be thoroughly cleaned of all rubbish, construction forms, stakes, excess material, and equipment, and all portions of the work shall be left in a neat and orderly condition. The final inspection will not be made until this has been accomplished.

Full compensation for clean-up shall be considered as included in the price paid for the various contract items of work requiring finishing, and no additional compensation will be allowed therefor.

Revised April 1986

6-26 AGGREGATE BASE

Aggregate base shall be Class 2 and shall conform to the provisions of Section 26 "Aggregate Bases" of the Standard Specifications and these Special Provisions.

Aggregate grading shall be 3/4" maximum unless otherwise approved by the Engineer. The Contractor shall submit current gradation, R-value, sand equivalent, and durability index test results as requested by the Engineer.

Aggregate base shall not be placed until the subgrade has been approved by the Engineer. In lieu of the placement requirements specified in Section 26, aggregate base material shall be placed upon prepared subgrade in a uniform windrow or layer, and after placing, the material shall be graded, compacted and watered in accordance with the requirements of Section 26-1.05 "Compaction" of the Standard Specifications and the Construction Plans. Motor graders may be used for the aforementioned grading. Tailgate placing of the material by dump trucks will not be permitted except in areas not readily accessible to approved spreading devices.

Aggregate base shall be compacted as specified in the Standard .,r.?cifications to £ relative compaction of 95 percent.

Finished grade shall be within 0.05 feet of plan grade.

The contract price paid per ton of aggregate base shall include full compensation for furnishing all labor, materials, tools and equipment and for doing all work involved in placing, compacting and watering aggregate base as shown on the plans and as specified in these Special Provisions, and no additional compensation will be allowed therefor.

Revised September 1989

6-36 PENETRATION TREATMENT

6-36.01 Liquid Asphalt Penetration Treatment Liquid asphalt penetration treatment shall conform to the provisions of Sections 36 "Penetration Treatment" of the Standard Specifications and these Special Provisions.

Prior to applying the liquid asphalt, the surface to be treated shall conform to the grades and compaction requirements shown on the plan and described in Section 6-19 of these Special Provisions and shall be clean of all loose or extraneous material. After approval from the Engineer, the roadbed shall be treated with SC-250 liquid asphalt at the rate of 0.45 gallons per square yard in two applications. The first application shall be at the rate of 0.25 gallons per square yard and the balance applied when the first application has fully penetrated the surface, or as approved by the Engineer. Alternate liquid asphalt grades and application rates may be required by the Engineer depending on ambient temperature and other factors. The liquid asphalt shall be applied with a full-circulation bar distributor and in conformance with Section 93-1.03, "Mixing & Applying," of the Standard Specifications.

After the final application of liquid asphalt has finished penetrating, any excess asphalt shall be covered with sand in conformance with Section 36-1.05, "Sand Cover," of the Standard Specifications. All evidence of excess liquid asphalt on the curbs, gutter and/or sidewalks and all excess sand shall be removed before final acceptance.

The contract price paid per ton of liquid asphalt shall include full compensation for preparation for treatment, furnishing and applying liquid asphalt and sand cover and remaining excess sand and asphalt and no additional compensation will be allowed therefor.

Revised April 1986

6-39 ASPHALT CONCRETE

6-39.01 General Asphalt concrete shall be Type B and shall conform to these Special Provisions and the following sections of the Standard Specifications:

39-1 General
39-2 Materials
39-3 Storing, Proportioning and Mixing Materials 39-4.01 Subgrade 39-4.02 Prime Coat and Paint Binder

All bituminous binder shall be viscosity grade AR-4000 liquid asphalt except AR-8000 liquid asphalt shall be used when the ambient temperature is over 90 to 95 F. Asphalt shall conform to those applicable parts of Section 92 "Asphalt" of the Standard Specifications.

The mineral aggregate shall be 3/4-inch maximum size for base courses when such work constitutes 100 or more tons, and shall be as specified on the plans for the finish course.

ms, the aggregate size may be the same as the finish
Asphalt concrete work required at manholes, water valves,
ing, and other miscellaneous facilities shall be 3/8-inch

Medium gradations shall be used. For base course work less than 100 tons, the aggregate size may be the same as the finish course,
feathering.
maximum size,

Asphalt concrete shall not be placed until the subgrade has been approved by the Engineer. Unstable subgrade shall not be paved. A prime coat is not required.

SS-1 asphaltic emulsion shall be applied to existing pavements, lower courses of new pavements (unless upper course is being applied in the same day and the lower course is clean), and vertical edges of new or existing pavements, prior to paving. If recommended by the manufacturer, the emulsion may be diluted up to 1:1. Immediately before applying the emulsion, the surface shall be cleaned of all dirt and loose material. Asphaltic emulsion and application shall conform to the applicable parts of Sections 94 "Asphaltic Emulsions" and 39-4.02 "Prime Coat and Paint Binder" of the Standard Specifications.

Revised Dec. 1985

6.45

6-39.02 Pavement Reinforcing Fabric Pavement reinforcing fabric shall conform to the provisions of Section 39-4.03 "Pavement Reinforcing Fabric" and Section 88 "Engineering Fabrics" of the Standard Specifications and these Special Provisions.

Prior to placing the fabric, the existing pavement to receive the fabric shall be cleaned to the satisfaction of the Engineer of all materials such as, but not limited to, vegetation, sand, dirt, gravel and water.

Cracks in the pavement will be filled by the City prior to placing the fabric.

Placement of the fabric shall be made only under the following conditions:

1. The ambient air temperature is above 50°F and rising;

2. The pavement is dry and the pavement temperature is 40 F and rising.

The surface area to receive the fabric shall be sprayed with pavement asphalt type AR-4000 at a rate of 0.25+/- 0.03 gallons per square yard.

The width of asphalt application will be the fabric width, plus four inches. The fabric shall overlap 2-4 inches at the longitudinal joints and 2-4 inches at the transverse joints. No joints shall be lapped with more than two layers of fabric. Transverse joints shall be shingled in the direction of the paving to prevent edge pick-up by the paver.

The fabric shall be placed into the asphaltic binder with a minimum of wrinkles that lap, and broomed or squeeged to remove any bubbles prior to the binder cooling substantially enough so that the fabric will not adhere to it.

The equipment used to place the fabric shall be approved by the Engineer.

The contract price paid per square yard for the Pavement Reinforcing Fabric shall include full compensation for furnishing all labor, material, tools, equipment and incidentals and for doing all the work involved in furnishing and placing the fabric complete in place as shown on the plans and as specified under these Special Provisions, and no additional compensation will be allowed therefor.

Revised Dec. 1985

6-39.03 Street Paving Street paving consists of spreading and compacting asphalt concrete in streets excluding miscellaneous areas as defined in Section 39-7 and these Special Provisions. Street paving shall be in conformance with Section 39-5 "Spreading and Compacting Equipment" and Section 39-6 "Spreading and Compacting''of the Standard Specifications.

The asphalt concrete shall comply with Section 6-39.01 "General" of these Special Provisions.

The amount of asphalt binder to be mixed with the aggregate shall be between 4 percent and 7 percent by weight of the dry aggregate. The fourth through seventh paragraphs in Section 39-3.03 "Proportioning" of the Standard Specifications shall not apply. When required by the Engineer, the Contractor shall submit a mix design for approval 15 days prior to paving.

Spreading and compacting shall conform to the Standard Specifications with the following exceptions:

Asphalt concrete shall not be spread with blading equipment; Vibratory rollers may be used with the approval of the Engineer;

The roller requirements of Section 39-5.02 "Compacting Equipment" may be reduced to one 2-axle steel tired tandem roller and one pneumatic tired roller provided the production rate allows the finish rolling to be accomplished satisfactorily; 3-wheel rollers

Asphalt concreteare prohibited;

according to the shal I be spread and compacted in by the Engineer: foil owing table unless otherwi: se

Total required	Top ayer 1	Next layer	Next an laye r
		down	down
.20' or less	tota	–	–
.25'	0.10	0.15'	–
.30'	0.15	0.15'	–
,35'	0.20'	0.15'	–
,40'	0.20	0.20'	–
,45'	0.20	0.25'	–
,50'	0.20	0.30'	–
,55'	0.20	0.15[1]	Ø .20'
,60'	0.20	0.20'	Ø .20'
,65'	0.20	0.20'	Ø .25'
0.70'	0.20	0.20'	Ø .30'

ayers approved

Compacting equipment reductions in Section 39-6.03 "Compacting" apply except (3) in which the total amount of asphalt concrete included in the contract is reduced to 500 tons;

6. Seal coat per Section 39-7.02 "Seal Coat" is not required.
7. The dumping of material in a windrow, in accordance with Section 39-5.01 "Spreading Equipment", shall be limited to

300 feet in advance of the paving machine, unless otherwise permitted by the Engineer. This requirement does not relieve the Contractor of other requirements relating to temperature, spreading and compacting.

Asphalt concrete shall be placed with pavers equipped with full electronic controls capable of reproducing grade controls with a 0.01 foot tolerance. Grade controls shall be provided on both sides of the paver and shall consist of two of the following:

- Sensors activated by a ski device not less than 30 feet long riding on an approved graded surface;
- Sensors activated by a foot or shoe riding on a previously placed mat or curb;
- Sensors activated by a foot or shoe riding on a grade wire with grade stakes at 25 foot intervals provided by an Engineer or Land Surveyor.

Should the methods and equipment furnished by the Contractor fail to produce a layer of asphalt concrete conforming to the requirements, including straightedge tolerance, of Section 39-6.03, "Compacting," of the Standard Specifications, the paving operations shall be discontinued and the Contractor shall modify his equipment or furnish substitute equipment.

The completed surface shall be thoroughly compacted, smooth, true to grade and cross section and free from ruts, humps, depressions or irregularities. Depressions over 0.02 feet in 10 feet and other surface irregularities shall be corrected to the satisfaction of the Engineer.

Miscellaneous facilities shall be adjusted to grade in accordance with Section 6-15.04 "Adjusting Facilities to Grade" of these Special Provisions.

Pavement defects shall be corrected at no additional cost to the City. No payment will be made for tonnage of asphalt concrete used in corrective work.

The contract price paid per ton of asphalt concrete shall include full compensation for furnishing all labor, materials, tools and equipment, furnishing and applying asphalt emulsions, and for doing all the work involved in furnishing, spreading, compacting and correcting asphalt concrete and no additional compensation will be allowed therefor.

Revised June 1988

6-39.04 Trench Replacement and Shoulder Paving Trench replacement and shoulder paving consists of spreading and compacting asphalt concrete in the following locations:

(a) trenches
(b) shoulders less than 8 feet wide adjacent to concrete curb and gutter
(c) asphalt sidewalks and ramps
(d) dikes, gutters, aprons and flares
(e) other miscellaneous areas designated by the Engineer

Asphalt concrete shall be produced from commercial quality asphalt and aggregates. The spreading and compacting requirements in Sections 39-6.02, "Spreading," and 39-6.03, "Compacting," of the Standard Specifications wi11 not apply.

The asphalt concrete shall conform to the following requirements:

1. Asphalt concrete shall be produced at a central mixing plant.

2. Aggregate shall conform to the 3/8-inch maximum, specified in Section 39-2.02, "Aggregate," of the Standard Specifications.

3. The amount of asphalt binder to be mixed with the aggregate shall be between 4 percent and 7 percent by weight of the dry aggregate as approved by the Engineer.

4. Spreading and compacting shall be performed by methods that will produce an asphalt concrete surfacing of uniform smoothness, texture, and density.

5. Asphalt concrete shall be spread and compacted in layers according to the following table:

Total required	Top layer	Next layer down
0.20'	or less	total
0.25'		total
0.30'	0.15'	0.15"
0.35'	0.20	0.15'

6. Compaction shall be performed with a tandem roller weighing between 4 and 6 tons unless otherwise approved by the Engineer.

The completed surface shall be thoroughly compacted, smooth, true to grade and cross section and free from ruts, humps, depressions or irregularities. Depressions over 0.03 feet in 10 feet and other surface irregularities shall be corrected to the satisfaction of the Engineer.

Miscellaneous facilities shall be adjusted to grade in accordance with Section 6-15.04 "Adjusting Facilities to Grade" of these Special Provisions.

Pavement defects shall be corrected at no additional cost to the City. No payment will be made for tonnage of asphalt concrete used in corrective work.

(Write appropriate payment section)

The contract price paid shall include full compensation for furnishing all labor, materials, tools and equipment, furnishing and applying asphalt emulsions, and for doing all the work involved in furnishing, spreading, compacting and correcting asphalt concrete and no additional compensation wi11 be allowed therefor.

Revised Dec. 1985

6-39.05 Asphalt Concrete Leveling Course Asphalt concrete leveling courses including emulsions shall conform to Section 6-39.01 "Asphalt Concrete," and these Special Provisions.

The intent of the leveling course or courses is to fill low or irregularly shaped surfaces to provide a uniform surface for placement of fabrics and/or asphalt concrete paving.

The Contractor shall apply leveling courses to depressions exceeding 0.03 feet in 4 feet and other irregularities as directed by the Engineer. The Contractor's and the Engineer's representatives shall walk the area to be paved and determine the areas to be leveled.

Where the required thickness of the leveling course will exceed 0.20 feet, the leveling course shall be applied in layers. The application shall be such that the narrowest layer is on the bottom and each successive layer extends beyond the edges of the lower layer.

Where the thickness required is less than one-half inch, asphalt concrete shall be No. 4 maximum in accordance with Section 39 "Asphalt Concrete" of the Standard Specifications.

The asphalt concrete shall be spread by any means to obtain the specified results and shall be compacted with a tandem roller weighing between 4 and 6 tons unless otherwise approved by the Engineer,

The contract price paid per ton of Asphalt Concrete Leveling Course shall include full compensation for furnishing all labor, materials, tools, equipment, incidentals and for doing all work involved in furnishing and placing asphalt concrete leveling courses complete in place as shown on the plans or as specified under these Special Provisions and no additional compensation will be allowed therefor.

- "• • -- November 1 986

6-39.06 Pavement Repair Existing pavement areas indicated on the plans shall be repaired as specified in these Special Provisions. Additional repair areas may be designated by the Engineer in the field.

Existing surfacing shall be removed in accordance with Section 6-15.02 "Removal Methods" of these Special Provisions to a depth of 0.4 feet and replaced with asphalt concrete unless otherwise shown on the plans.

The underlying subgrade shall be compacted to a relative compaction of 92% for a minimum depth of 8". In lieu of compaction of native material, the subgrade may be replaced with 6" of Class 2 aggregate base in accordance with the applicable provisions of Section 26 "Aggregate Base" of the Standard Specification.

The contract price paid per square foot for pavement repair shall include full compensation for cutting and removing existing surfacing, compacting subgrade and replacing with asphalt concrete and no additional compensation will be allowed therefor.

November 1986

6-42 PAVEMENT GRINDING

Pavement grinding shall be done at the locations and to the grades shown on the Plans in accordance with these Special Provisions.

Grinding shall be performed with abrasive grinding equipment utilizing carbide or diamond cutting tips.

Residue from grinding shall be removed from the roadbed by sweeping or washing.

Residue from grinding operations shall not be permitted to flow into gutters or other drainage facilities or across lanes occupied by public traffic. Solid residue resulting from grinding operations shall be removed from pavement surfaces before such residue is blown by the action of traffic or wind. The noise level created by the combined grinding operation shall not exceed 86dBA at a distance of 50 feet measured at right angles to the direction of travel.

Pavement grinding shall be measured by the lineal foot or square foot as shown in the proposal. The contract price paid for grinding existing pavement shall include full compensation for furnishing all labor, materials, tools, equipment and incidentals, and for doing all work involved in grinding the existing pavement and removing residue, including furnishing water for washing the pavement, as shown on the plans, and as specified under these special provisions, and no additional compensation will be allowed therefor.

Revised November 1986

6-55 STEEL STRUCTURES

6-55.01 General The steel structures shown on the plans shall Tie constructed in accordance with the details shown, the applicable portions of Section 55 "Steel Structures" of the Standard Specifications, and these Special Provisions.

Four copies of working drawings shall be furnished to the Engineer for approval at least 10 working days prior to fabrication.

The working drawings shall show details of any permitted options proposed in the work, details for connections not dimensioned on the plans, the sequence of shop and field assembly and erection, welding sequences and procedures, the location of butt welded splices, and the location of any temporary supports that are to be used.

Unless otherwise noted in the plans and specifications, all materials and fabrication shall conform to Section 55-2 "Materials" and Section 55-3 "Fabrication" of the Standard Specifications.

Revised April 1986

6-59 PAINTING

6-59.01 General All required painting shall be done in accordance with the plans, the applicable portions of Section 59 "Painting" of the Standard Specifications, these Special Provisions and the coating manufacturer's recommendations.

Attention is particularly directed to the following Sections of the Standard Specifications:

59-1.02	Weather Conditions
59-1.03	Application
59-1.05	Protection Against Damage
59-2	Painting Structural Steel

Revised April 1986

6-62 STORM DRAINS

6-62.01 General Storm drain pipe and appurtenances shall be furnished and installed in accordance with applicable sections of the Standard Specifications, these Special Provisions and as shown on the plans. Storm drain pipe shall be either asbestos cement pipe, precast concrete pipe, or PVC pipe up thru 15 inch. Cast-in-place pipe and corrugated metal pipe shall only be used where specifically shown on the plans.

PVC storm drains shall be furnished and installed in accordance with Section 6-71.04 "Polyvinyl Chloride Pipe (PVC)" of these Special Provisions. Approved rubber ring water stops or adaptors shall be used at all junctions with manholes, catch basins and other structures. PVC pipe shall not be used where the depth of cover is less than three feet.

Tying pipe into existing structures shall be done by carefully breaking an opening in the wall of the structure and inserting the pipe so the end is flush with the inside wall. After insertion, the annular space shall be tightly packed with a non-shrink grout (Burke, Horn or approved equal). The mortar shall be placed in accordance with the manufacturer's instructions and troweled smooth and flush with the i-terior surface of ..j.e manhole.

At new structures, the pipe shall be cast into the wall as shown on the appropriate Standard Plan. As an alternate, pipe may be laid through the structure and the structure constructed around the pipe. The top of the pipe shall then be removed and the edge grouted smooth.

Upon completion of backfill, prior to paving, the City may inspect storm drains with closed-circuit television equipment. Defective work shall be repaired by the Contractor in a method approved by the City prior to final paving. The television logs will be made available to the Contractor for review.

Defective work shown by TV or other inspection includes:

- Cracks, openings, leaks, or breaks in the pipe or structures;
- Joints offset more than 1/2" or 1% of the inside diameter, whichever is greater;
- Standing water exceeding 0.20 foot
- Protruding, folded or otherwise deformed gaskets

All repairs of defective work shall be made at no cost to the City. Reinspection of repairs will be made by the City at the Contractor's expense.

Trench patch shall conform to the applicable provisions of Section 6-39.04 "Trench Replacement and Shoulder Paving" of the Special'Provisions, and the details shown on the plans.

"Building A Better Community"

Public Works Department

Public Improvement Design Standards

May 1991

City of Lodi Public improvement Design Standards

introduction

I -1 Purpose and Scope ..... , 1

I - 2 Design 1

I - 3 Authority 1

Section 1 - Streets

1 100 General 2

1.101 Scope 2

1.102 Submittals 2

1.200 Design Volumes 2

1.201 General 2

1.202 Traffic Studies 3

1.300 Street Design 4

1 301 General Design 4

1 302 Cross Section 5

I.303 Intersection/Driveway Sight Distance .' 5

1.304 Vertical Alignment 6

1 305 Horizontal Alignment 8

1 306 Medians 9

1.400 Driveways 9

1.401 General Requirements 9

1.402 Special Driveways 9

1 403 Width 10

1.404 Distances from Curb Returns ..... , 10

1 405 Distances From Utility or Safety Devices 10

1.406 Distance Between Driveways 10

1 407 Distances From Property Line 10

1.408 Removal ..... 1(

1.409 Parking Lot Driveways ..... 1'

1.410 Driveway Slope 11

1.500 Curb, Gutter and Sidewalk 11

1.501 General Requirements 11

1.502 Curb and Gutter Type 11

1 503 Sidewalk 12

1.504 Wheelchair Ramps 12

1.505 Back of Sidewalk 12

1.600 Structural Section 12

Section 2-Wastewater

2.100 General 14

2.101 Scope ..... u

2.102 Submittals 14

2.200 Design Flow 15

2.300 Pipe Design 16

2.301 Minimum Size 16

2.302 Design Depth of Flow 16

2.303 Slope 16

2 304 Vertical Alignment 1 7

2.305 Horizontal Alignment 17

2.306 Pipe Materials 18

2 307 Joints and Fittings 18

2.400 Services 18

2.401 General 18

2.402 Monitoring Structures 19

2.403 Traps and Waste Interceptors 19

2.500 Manholes and Miscellaneous Structures 19

2.501 Manholes 19

2.502 Drop Manholes 19

2.600 Lift Stations 19

2.601 General 19

2.602 Design 19

2.603 Force Mains 21

Section 3 - Storm Drainage

3.100 General 22

3.101 Scope 22

3.102 Submittals 22

3.200 Design Flow 23

3.300 Pipe Design 23

3.301 Minimum Size 23

3 302 Design Depth of Flow (Hydraulic Grade Line) 23

3 303 Slope 24

3.304 Vertical Alignment 24

3.305 Horizontal Alignment 25

3.306 Pipe Materials 25

3.307 Pipe Joints 26

3.400 Services 26
3.401 General 26
3.402 On-site Design Requirements.....26
3.500 Manholes and Miscellaneous Structures 27
3.501 Manholes 27
3.502 Catch Basins 27
3 600 Pump Stations 28
3.700 Detention Basins..... 28
3 701 General Requirements..... 28
3.702 Temporary Basins 28
3 703 Permanent Basins..... 29
SECTION 4 -Water
4.100 General 30
4.101 Scope..... 30
4.102 Submittals 30
4.200 Design Flow 31
4,300 Pipe Design 31
4.301 Minimum Size..... 31
4 302 Design Pressure 32
4.303 Slope..... 32
4.304 Vertical Alignment 32
4.305 Horizontal Alignment 32
4 306 Pipe..... 33
4 307 Joints 33
4.400 Services 33
4.401 General 33
4 402 Domestic Service 33
4 403 Fire Service..... 34
4.500 Valves, Fire Hydrants and Miscellaneous Appurtenances 36
4.501 Valves 36
4.502 Fire Hydrants..... 37
4 503 Blow-offs and Temporary Connections 37
4.504 Thrust Blocks.....37
Section 5 - Miscellaneous Requirements
5.100 Maps and Easements 38
5.101 Maps.....38
5.102 Easements.....38

5.200 Improvement Plans and Specifications 39
5.300 As-built Plans and Certifications 40
5.400 Traffic Control 41
5.500 Soils Reports 41
5.600 Grading and Earthwork 41
5.601 Grading Plans 41
5 602 Dust Control 42
5.603 Erosion Control 42
5.700 Trench and Pipe Strength Design 42
5.701 General 42
5 702 Soils Investigation 43
5 703 Flexible Pipe 43
5.703.1 Ductile Iron Pipe 43
5.703.2 Polyvinyl Chloride (PVC, ASTM D3034) 44
5.703.3 Polyvinyl Chloride (PVC, AWWA C900) 44
5.704 Rigid Pipe 44
5.704.1 Asbestos Cement Pipe (AWWA C400) 44
5.704.2 Concrete Pipe (ASTM C14, C76) 44
5.704.3 Vitrified Clay Pipe (ASTM C700) 44

Appendix

A -1 Improvement Plan Requirements 45
A-1.1 General Requirements 45
A -1.2 Plan Notes 45
A - 1 3 Checklist 46
A - 2 Bid Item List 51
A - 3 Wastewater Flow Calculation Sheet 53
A - 4 Storm Drainage Calculation Sheet 54
A - 5 References 55

CITY OF LODI
PUBLIC WORKS DEPARTMENT

48" Manhole

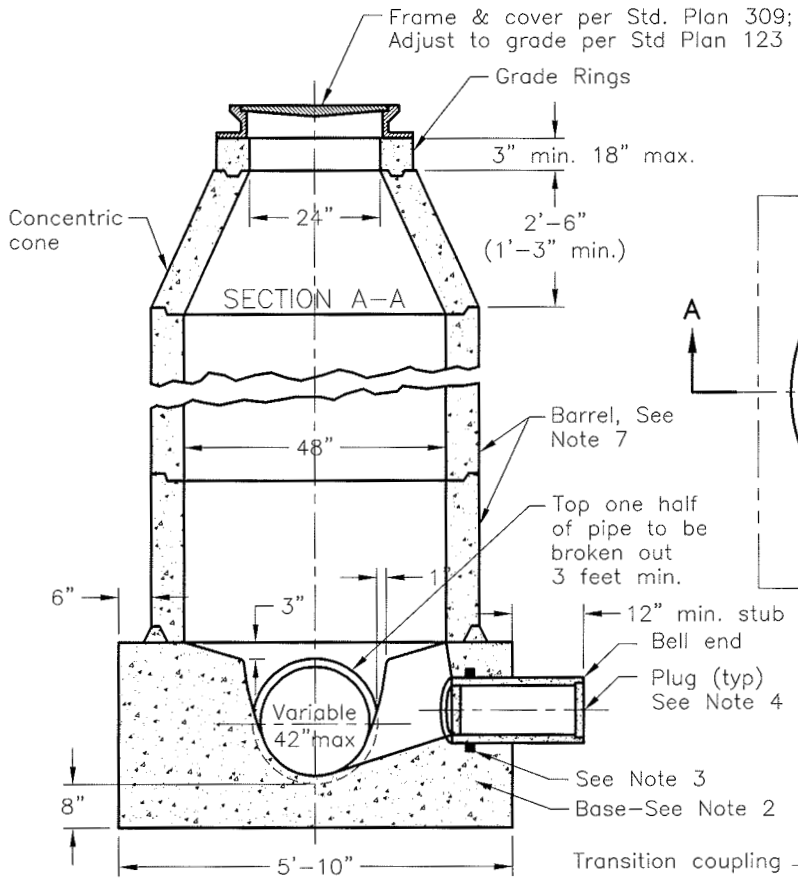

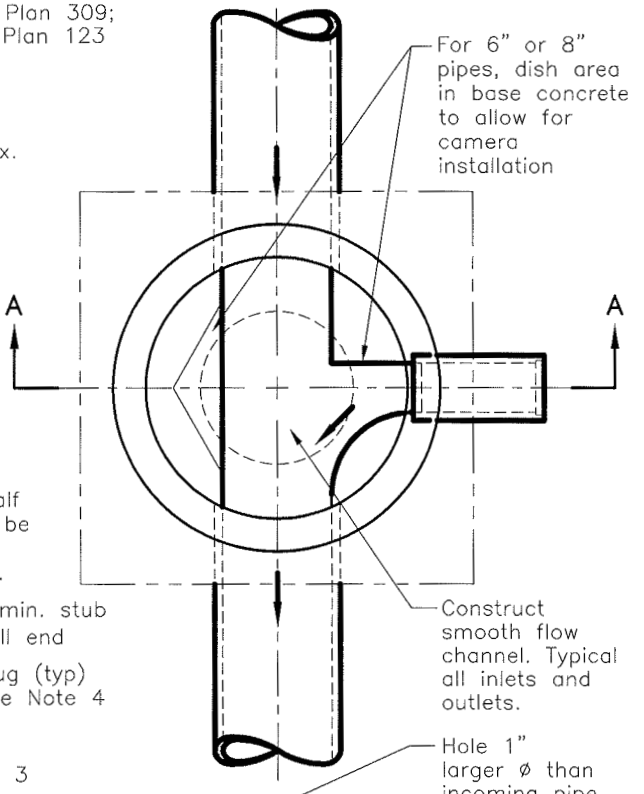

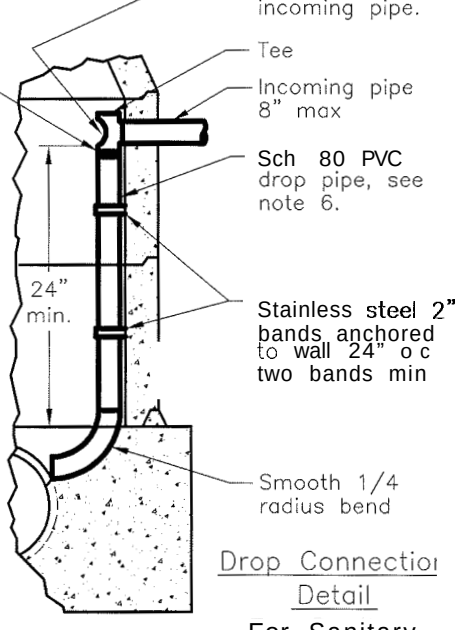

Drop Connection Detail

For Sanitary Sewer only

Notes.

1. Barrel, cone and grade ring sections shall conform to ASTM C478, latest revision Manufacturer to be opproved by the engineer
2. Base shall consist of cast-in-place Class B concrete per Sec 90 Caltrans Std Specification Prefabricated bases shall conform to Note 1 and be placed an 4" of concrete or 3/4" Class II AB Bedding
3. Rubber ring waterstop or manhole adapter required for PVC pipe installations
4. Plugs shall be compression type as approved by the Engineer
5. Backfill around MH shall be compacted to 95% R C min
6. Drop connection to be used only when shown on the plans or approved by the Engineer Drop pipe to be one size larger than the incoming pipe
7. All barrel joints shall be grouted inside and outside or sealed Ram-nek or approved equivalent.

Dr. KT	No.	Date	Revision	Appr.
Ch. WS				
Date 12/00				

Approved By: F. Wally Sandelin, City Engineer, R.C.E. 39895 — Date 12/28/0

STD PLAN 301

CITY OF LODI
PUBLIC WORKS DEPARTMENT

Saddle Manhole

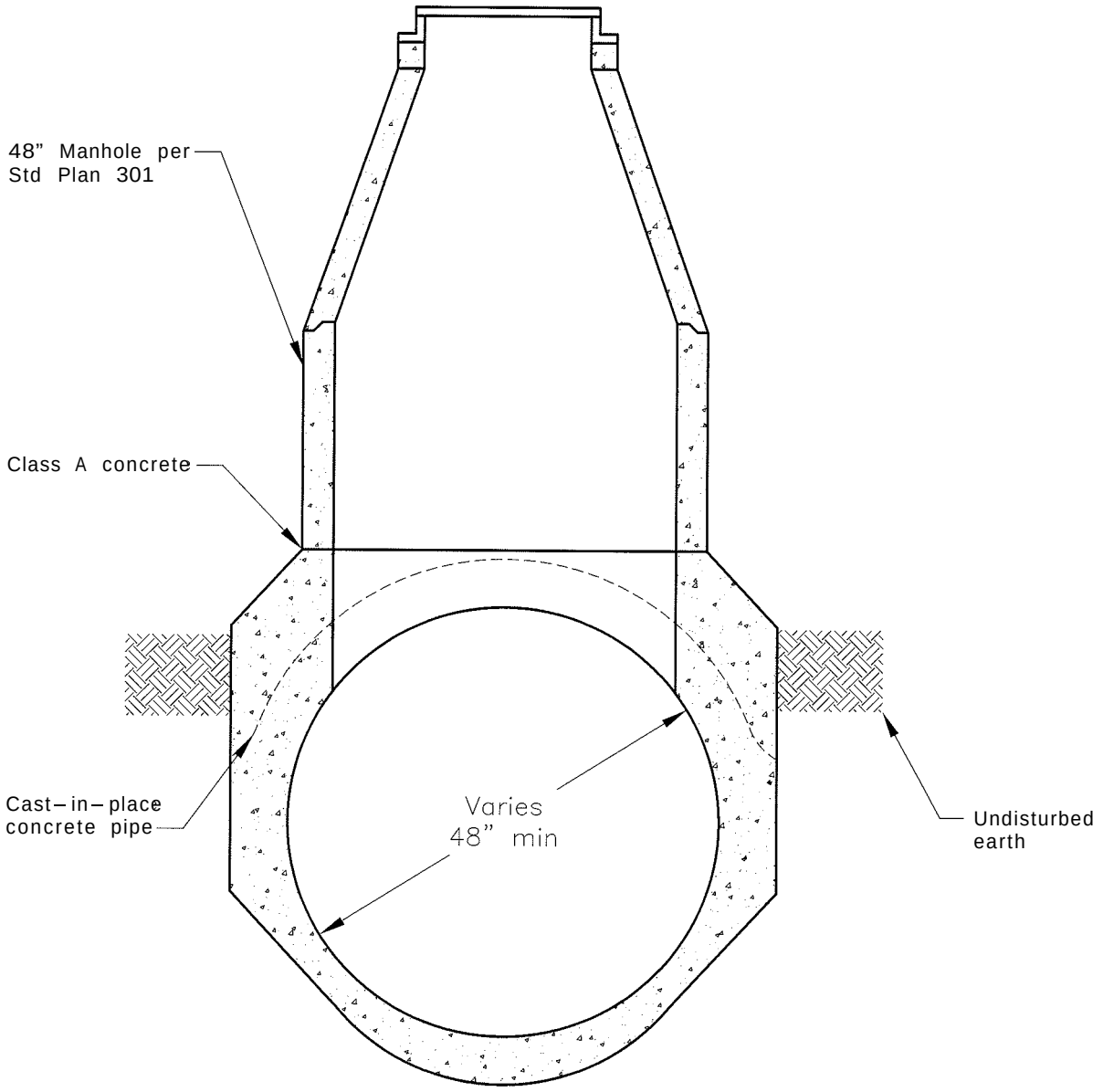

Votes:

1. Make manhole opening in top of pipe before concrete sets and place barrel within following 7 days.

Dr. KT	No	Date	Revision	Appr.	Approved By: F. Wally Sandelin 12/28/00
Ch. WS					F. Wally Sandelin, City Engineer, R.C.E. 39895 — Date
Date 12/00					

STD PLAN
302

CITY OF LODI

PUBLIC WORKS DEPARTMENT

Side Inlet Catch Basin

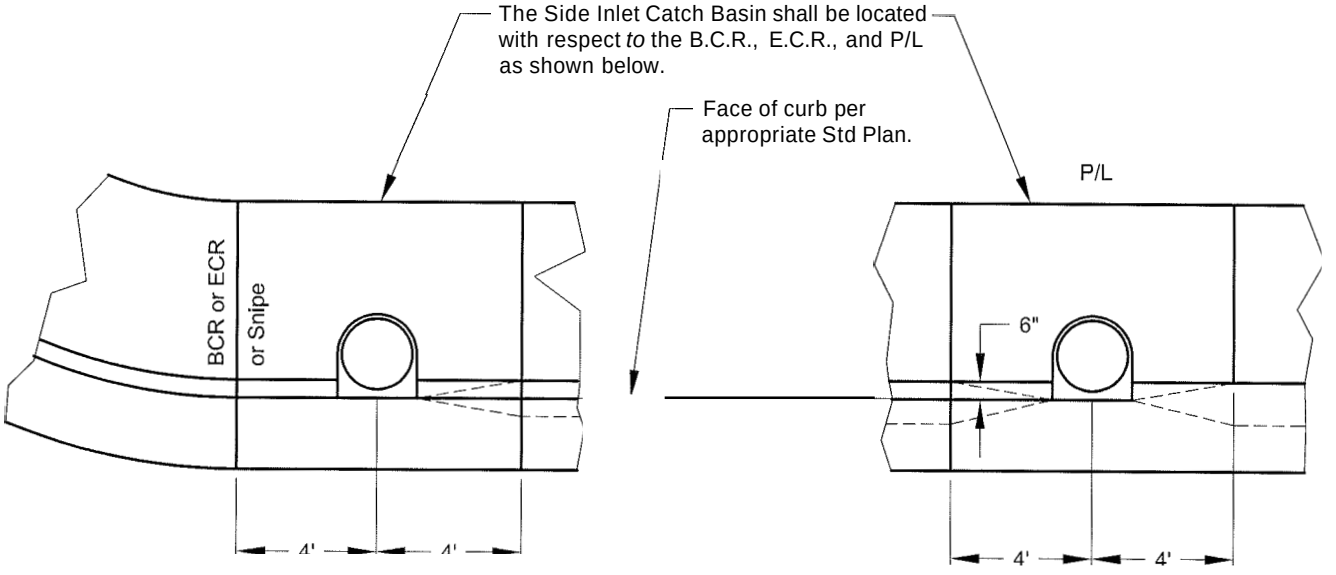

Flowline and curb transition (typ.)

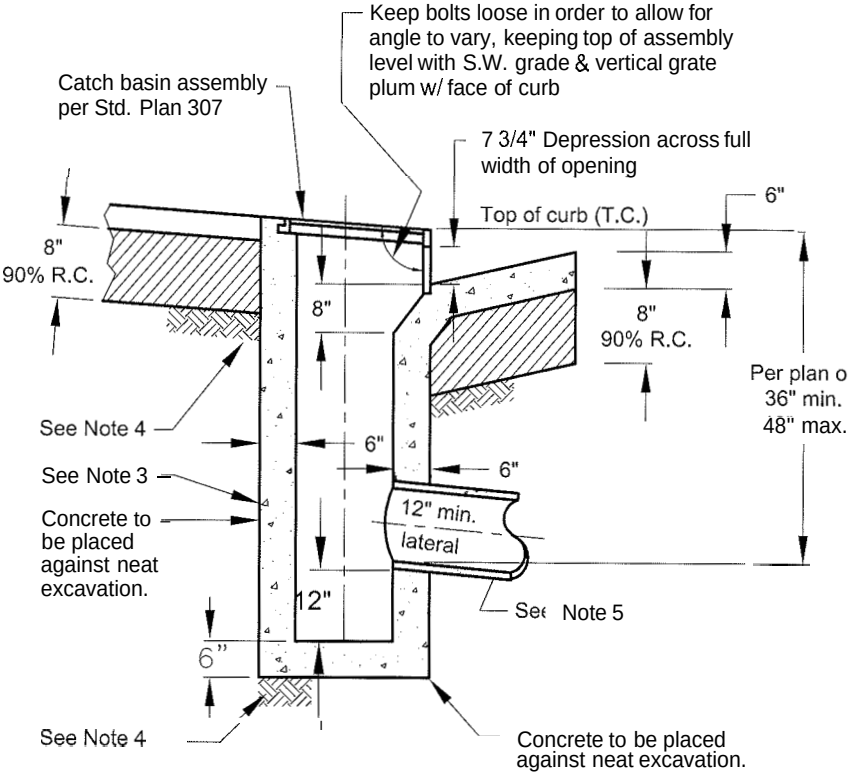

Notes:

1. The concrete shall conform to following criteria.
   A. 2500 P.S.I. at 28 days.
   B. 1 1/2" maximum aggregate.
   C. 4" slump at placing site.
   D. Light broom finish.
   E. Impervious membrane cure.
2. When catch basin is to be constructed with stub, the stub shall extend beyond the toe of the curb & gutter and plugged with precast plug.
3. Barrel may be constructed with 18" R.C.P. and grouted smooth.
4. Recornpact over-excavated areas to 92% R.C.
5. Lateral line must be ductile iron pipe when cover is 2' or less.
6. For trench backfill requirements See Std. Pln 501.

Dr. KT
Ch. WS
Date 12/0

No.	Date	Revision	Appr.
1	7/01	UPDATE PER FIRST REVISION	
2	2/04	REVISED SICB OPENING DIM.	
3	2/05	REVISED TRANSITION DIM.	

Approved By: F. Wally Sandelin 2/2/05
City Engineer
RCE 39895
Date

STD PLAN
303

CITY OF LODI
PUBLIC WORKS DEPARTMENT

Drop Inlet Catch Basin

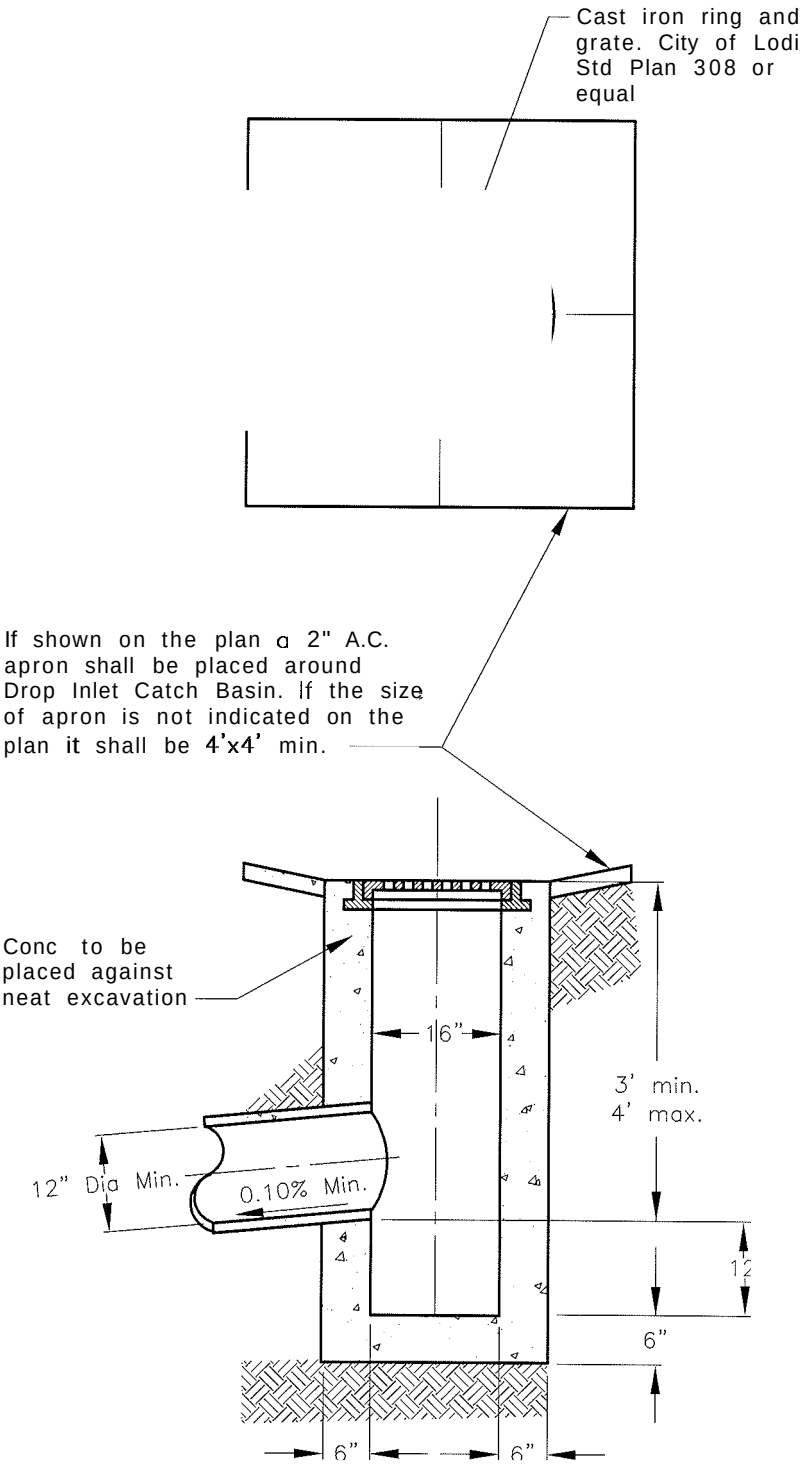

Notes:

1. Conc. 2500 psi at 28 days
   I 1/2" max. agg.
   4" slump at placing site.
   Light broom finish.
   Impervious membrone cure.
2. For trench backfill requirements see Std Plan 501.
3. For 24" catch basin, use Std Plan 310 with slotted cover.
4. Alternate construction – use 18" RCP, grout all openings

Dr. KT	No.	Date	Revision	Appr.	Approved By: F. Wally Sandelin 12/28/00	STD PLAN
Ch. WS					F. Wally Sandelin, City Engineer, RCE 39895 — Date	304
Date 12/00						

CITY OF LODI

PUBLIC WORKS DEPARTMENT

SIDE INLET CATCH BASIN ASSEMBLY

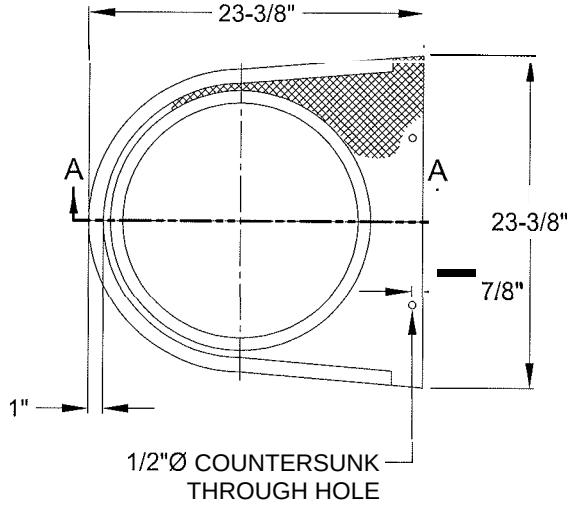

PLAN VIEW FRAME

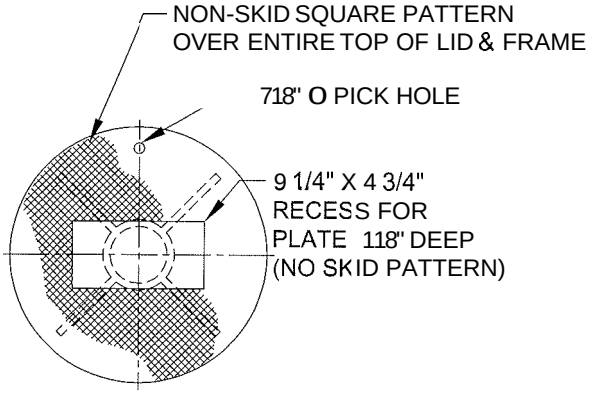

PLAN VIEW LID

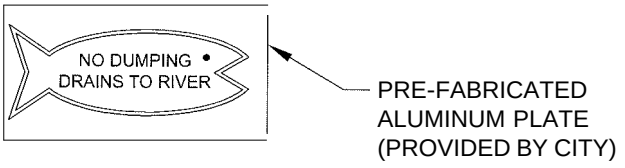

PLATE DETAIL

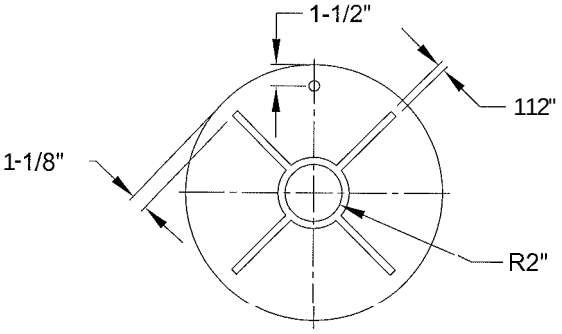

LID UNDERSIDE

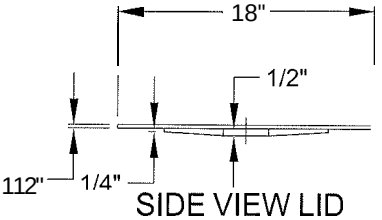

SIDE VIEW LID

INSTALLATION SHALL BE AS PER STANDARD PLAN 303 & 314

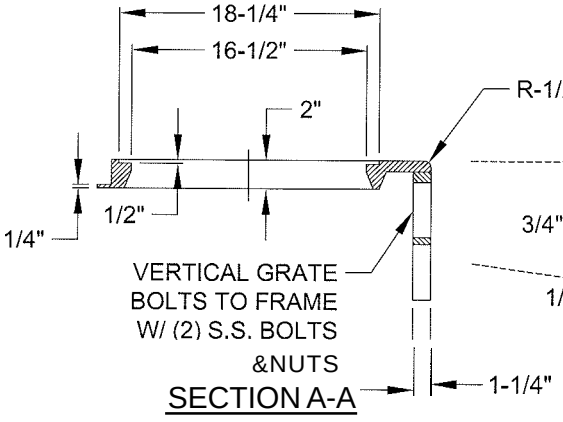

SECTION A-A

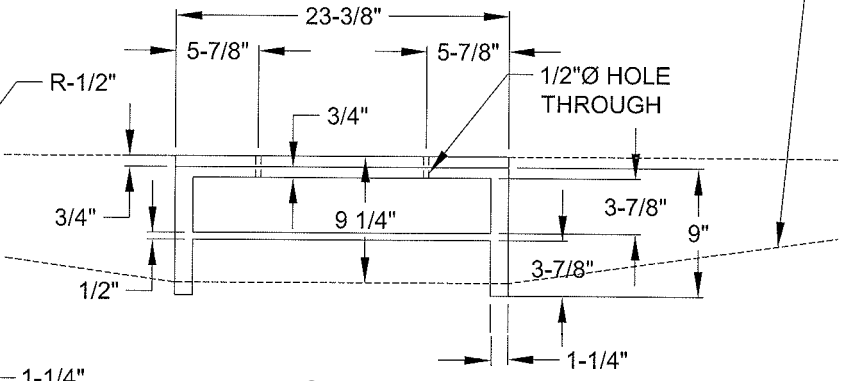

FRONT VIEW

Dr.	KG	No.	Date	Revision	Appr.
Ch.	WS	1	2/05	NEWSTANDARDPLAN	
Date	6-04				

Approved By: F. Wally Sandelin, City Engineer, R.C.E. 39895 — Date: 2 / 2 / 05

STD PLAN

307

CITY OF LODI
PUBLIC WORKS DEPARTMENT

Drop Inlet Catch Basin Assembly

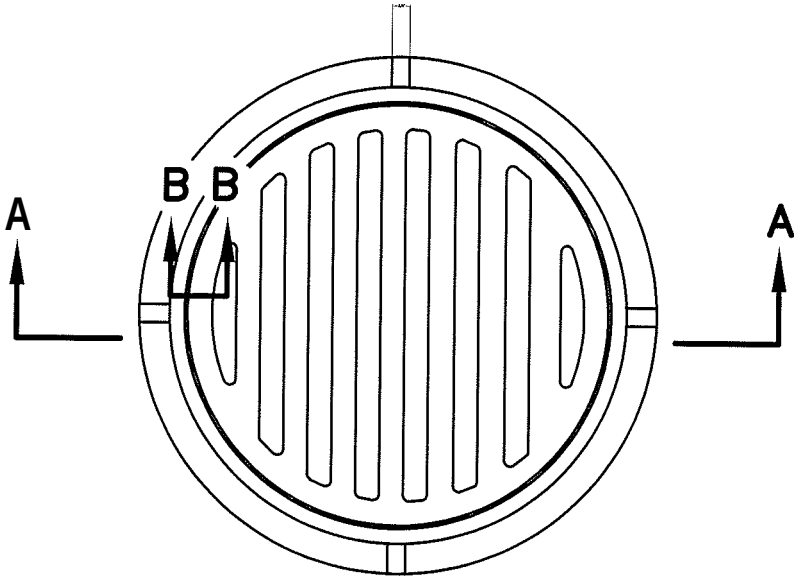

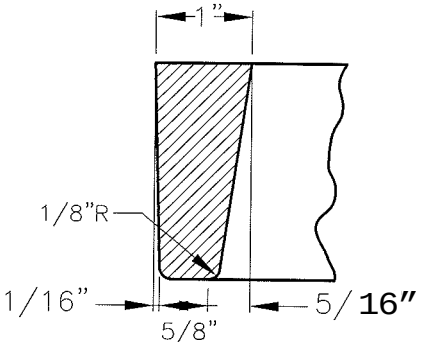

Section

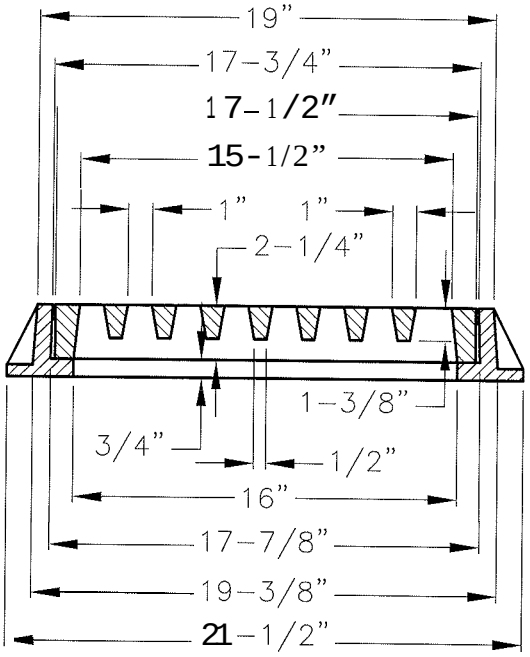

Section A-A

Dr. KT	No.	Date	Revision	Appr.	Approved By:	STD PLAN
Ch. WS					F. Wally Sandelin 12/28/00 F. Wally Sandelin City Engineer R.C.E. 39895 Date	308
Date 12/00						

CITY OF LODI

PUBLIC WORKS DEPARTMENT

Manhole Assembly (24")

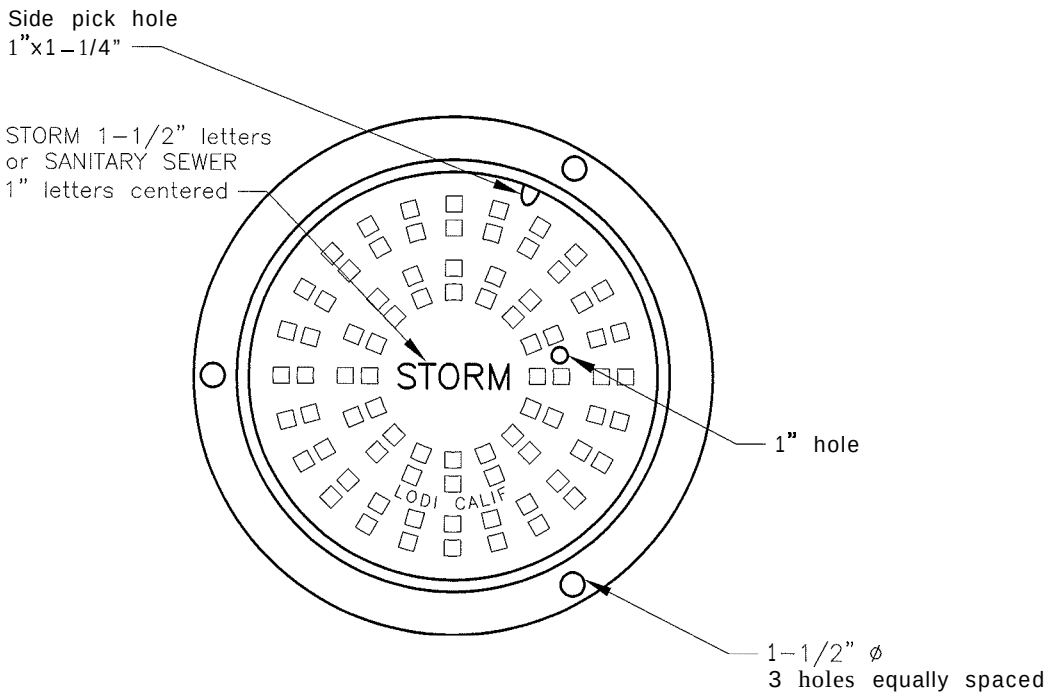

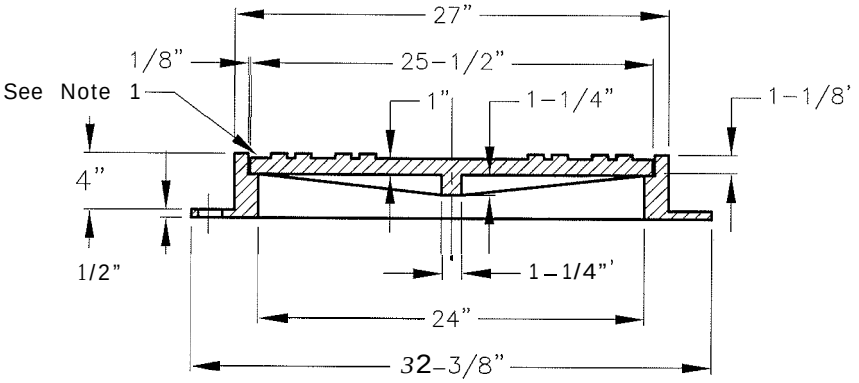

Notes:

1. Frame-Approx. wt. 140 lbs.
2. Cover-Approx. wt. 136 lbs.
3. Manhole cover shall be morked "STORM" or "SANITARY SEWER" as oppropriate
4. Material-Cast Iron per ASTM A-48 Class 30
5. See Std. Plan 123 for adjustment to grade.

Dr. KT	No.	Date	Revision	Appr.	Approved By:	STD PLAN
Ch. WS					F. Wally Sandelin 12/28/00	309
Date 12/00					F. Wally Sandelin, City Engineer, R.C.E. 39895 — Date	

PUBLIC WORKS DEPARTMENT

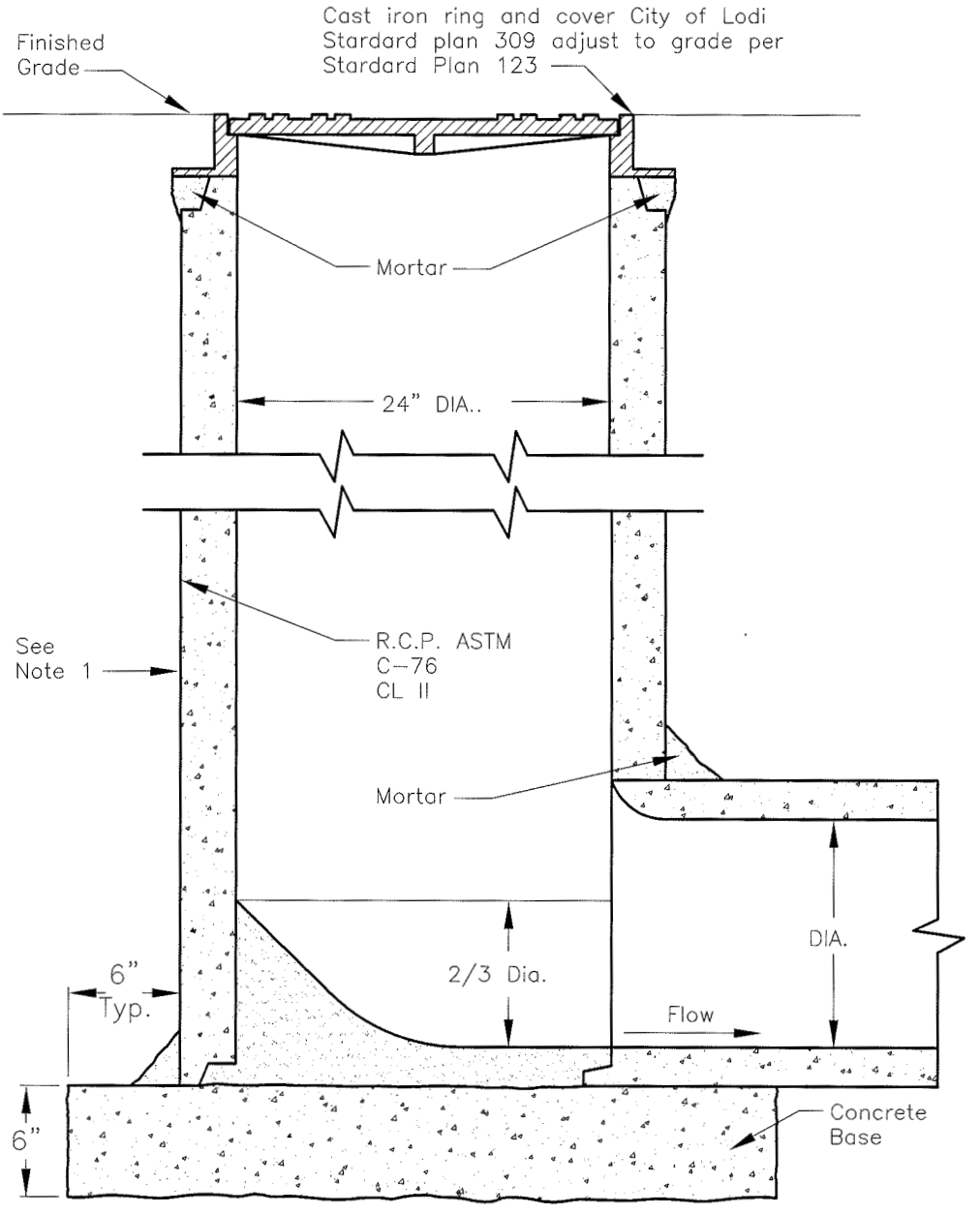

Notes:

1. Backfill around riser shall be a minimum of 92% R.C.
2. Concrete:
   A. 2500 psi @ 28 days
   B. 4' slump maximum.
   C. Class B per Section 90 of Standard Specifications. 1-1/2" max. agg.
3. For depth over 60", use 48" manhole, Standard Plan 301.

Dr. KT	No.	Date	Revision	Appr.	Approved By:	STD PIAN
Ch. WS					F. Wally Sandelin 12/28/0	310
Date 12/00					F. Wally Sandelin, City Engineer, R.C.E. 39895 — Date	

CITY OF LODI
PUBLIC WORKS DEPARTMENT

Construction Catch Basin Filter

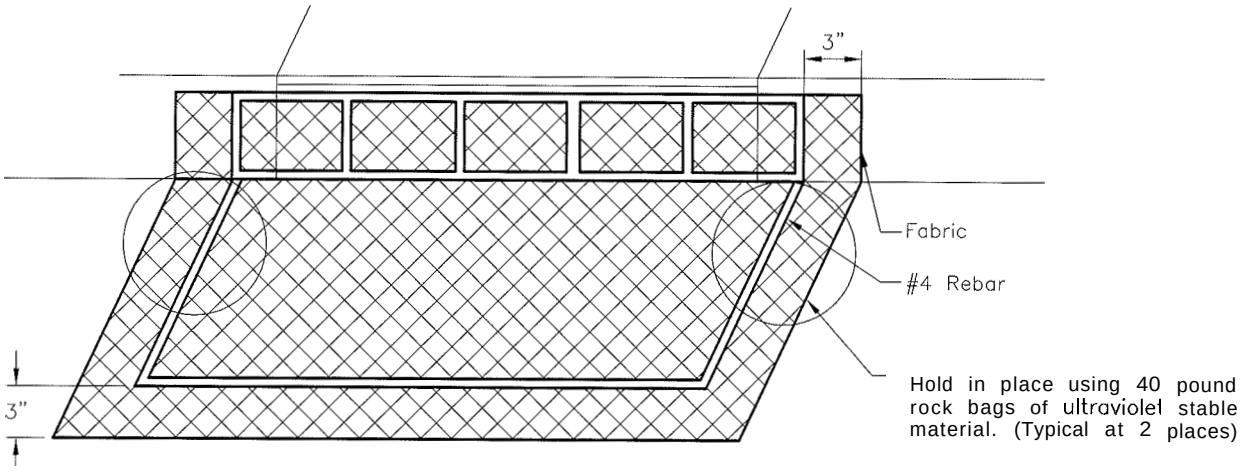

Fabric to extend 3" minimum past bar on front & sides.

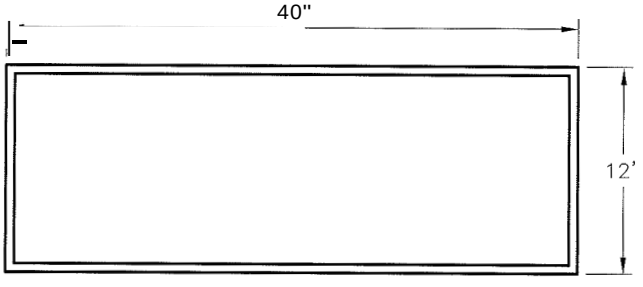

Top

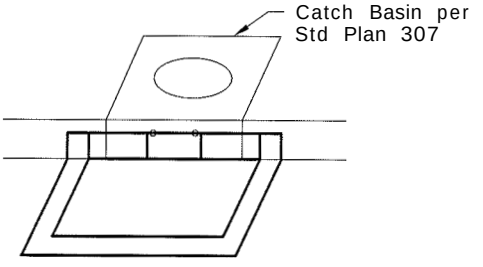

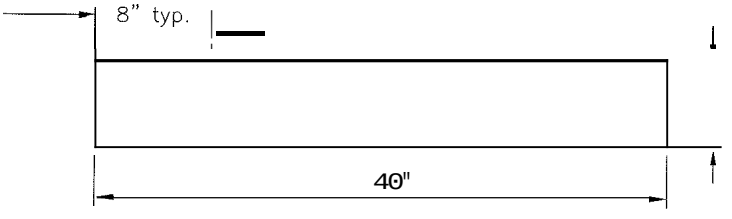

Front

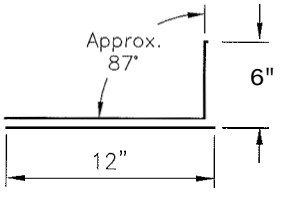

Side

Notes:

Dr. KT	No.	Date	Revision	Appr.	Approved By: F. Wally Sandelin, City Engineer, R.C.E. 39895 — 12/28/0(Date	STD PLAN
Ch. WS						313
Date 12/0(						

CITY OF LODI
PUBLIC WORKS DEPARTMENT

Gutter Transition Detail

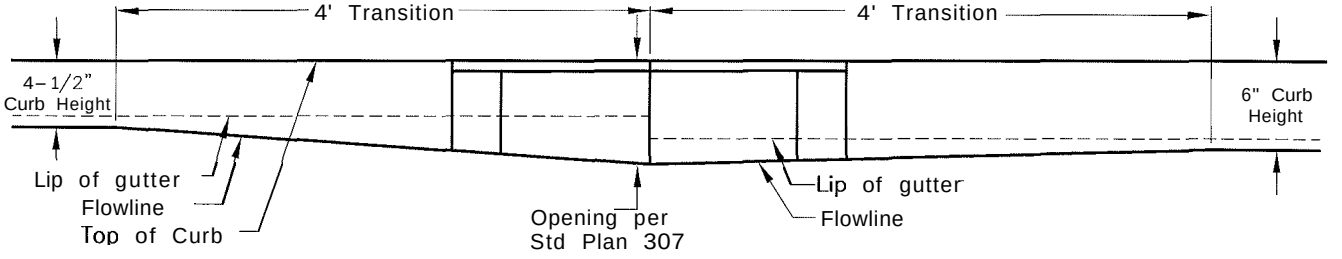

Left side for 4-1/2" Curb Height

Gutter Transition Detail

Right side for 6" Curb Height

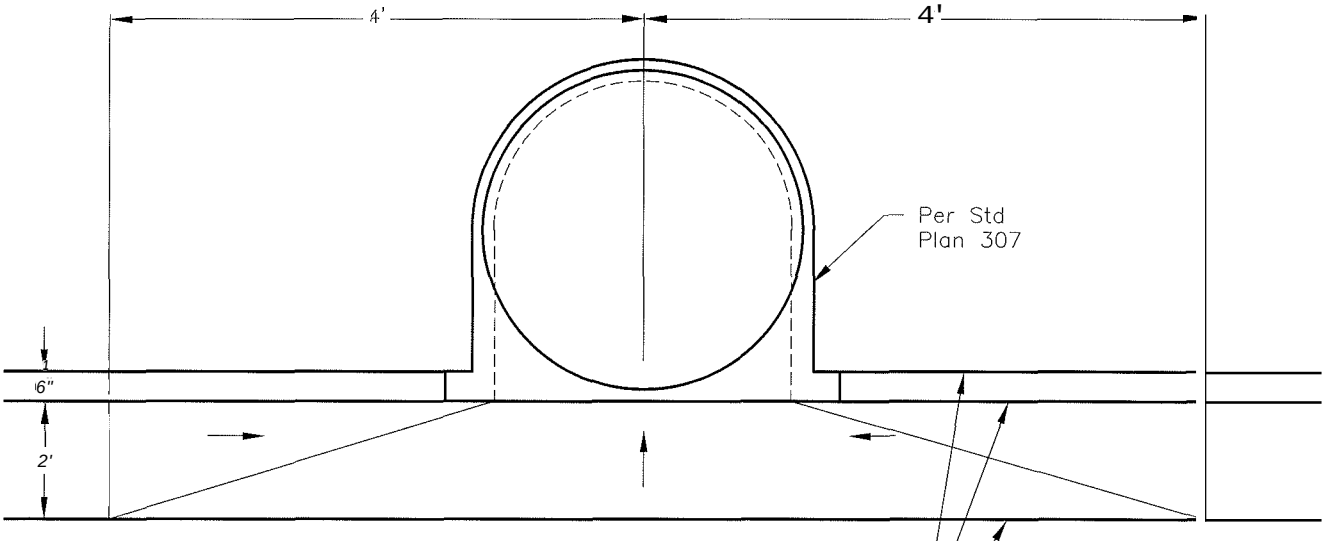

Plan View

Back of Curb
Face of Curb
Lip of Gutter

Dr. KT	No	Date	Revision	Appr.
Ch. WS				
Date 12/00				

Approved By: F. Wally Sandelin 12/28/00
F. Wally Sandelin
City Engineer
RCE 39895
Date

STD PLAN
314

CITY OF LODI
PUBLIC WORKS DEPARTMENT

Sand/Oil Trap

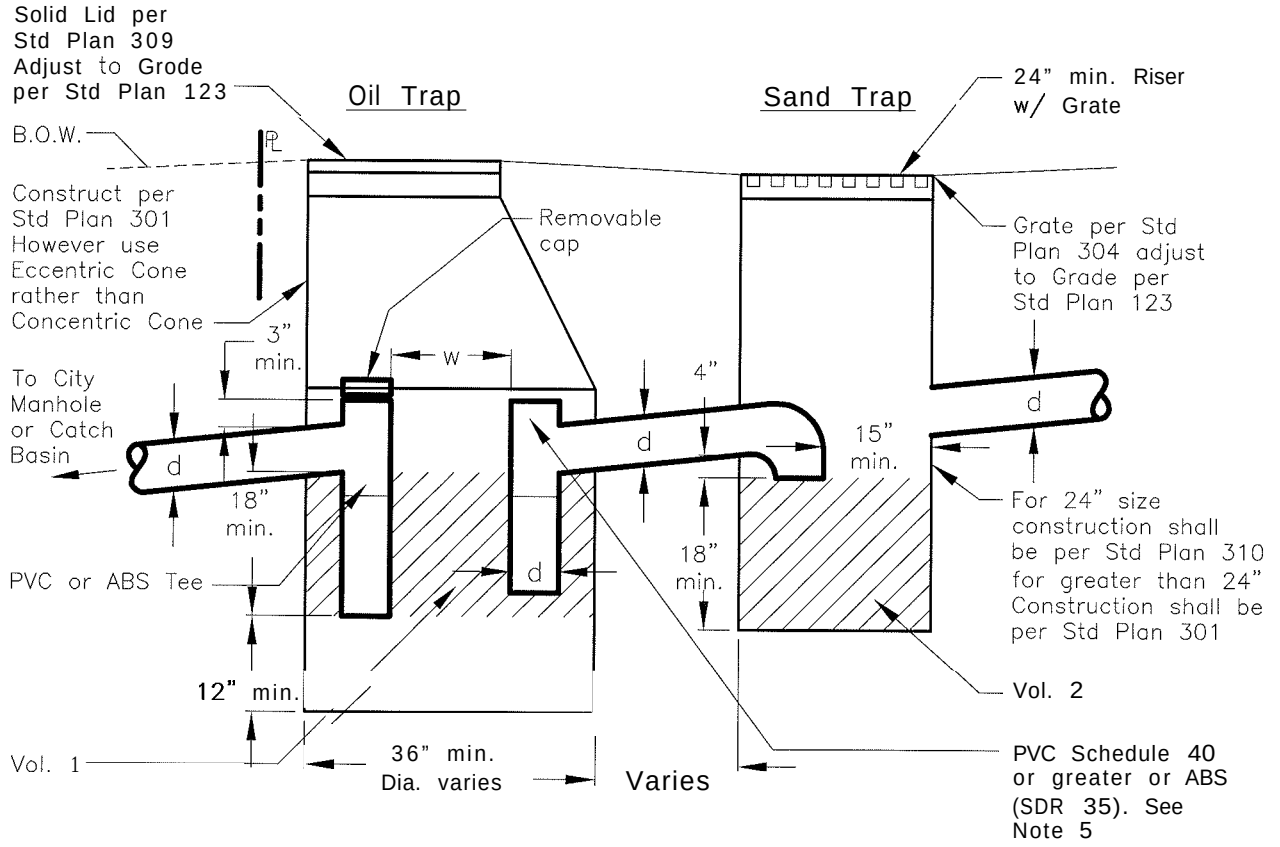

Drainage Area (s.f.) (Excluding Landscaping)	Vol. 1 cu. ft.	d	w	Vol. 2 Combined all C.B.'S cu.ft.
0 – 20,000	3	6"	12"	Drainage Area ÷ 4000
20,000 – 40,000	6	8"	16"	
40,000 – 100,000	10	10"	20"	
100,000 – 220,000	12	12"	24"	

Notes:

1. Precast commercial units are acceptable with prior approval.
2. Oil Trap to be outside of fencing and subject to inspection at all times.
3. Larger sizes may be required based on generation of oil and/ or sand (i.e. Bulk oil facilities, Trucking firms)
4. For lower flows Standard Plan 205 can be used with City approval.

Dr. KT	No.	Date	Revision	Appr.	Approved By:	STD PLAN
Ch. WS	1	2/04	ADDED REMOVABLE CAP			
Date 12/00					2/12/04	

APPENDIX F

Overflow Emergency Response Documents

Appendix F includes the following:

F-1 Sanitary Sewer Overflow Response Plan

F-2 Water Service Division Required Training

F-3 Water Service Division Recommended Training -Tail Gate Meeting

F-4 Standard Operating Procedures (SOP) for Spill Mitigation and Containment

City of Lodi
Water and Wastewater Division

Sanitary Sewer Overflow

Response Plan

Index

Introduction…… 1

Responding Staff Responsibilities..…… .2

Spill Definitions.. …… .3

Safety.. …… 4

Sanitary Sewer Overflow Plan Flow Chart.. 5-6

Response Plan (Public Right of Way)…… 7

Response Plan (Private Property)…… 8

Incident Staff Responsibilities…… .9

Training Plan. …… .10

Customer information sheet.. …… 11

Sanitary Sewer Overflow Report Form.. 12-13

Flow Estimation Charts…… 14-19

Wastewater System Map. …… .20

Storrn Drain System Map.. …… ..21

Introduction

The City of Lodi's Public Works Departments Water and Wastewater Division is Responsible for the operation and maintenance of the city's Wastewater collection system, Strom drain Collection system, Wastewater and storm drain Manholes, and two wastewater transmission lines. The purpose of this system is to collect and convey the city's wastewater to its White slough Water pollution control facility for treatment. These facilities are well maintained and normally should not result in any sewage spills or overflows. However, the possibility exists that unforeseen accidents, unusual equipment failure or other events not controllable by the city could result in a sewage spill/overflow. This procedure provides a plan that when enacted in response to a sewer spill/overflow would reduce or eliminate public health hazards, spillage of raw sewage onto public or private property, unnecessary property damage, contamination of the environment, and the inconvenience of service interruptions.

This Sanitary Sewer Overflow Response Plan (SSORP) is designed to assist and train employees to comply with the responsibilities of the plan and to ensure that all citizens and employees health and safety are protected. It is also designed to ensure that all the appropriate entities are informed of all sewage spills.

Any Sewage spill over 1,000 gallons shall be reported to the California Regional Water Quality Control Board – Central Valley Region @ 1- 916-255-3000

Responding; Staff Responsibilities

The first crew responding to a sewer backup has the immediate responsibility to protect people, property, and the environment from effects of a sewage spill/overflow. To meet these objectives in a rapid, effective and organized manner, staff will respond and fulfill the duties in the following categories as directed by this plan:

#1 CONTAIN spilling sewage from entering waterways

- Capture the sewage where it can be recovered and returned to the sewer system.
- Contain sewage in an advantageous locations (i.e. flood control facilities, construction excavations locations, vacant lots ect.)
- Containment materials include sand, sand bags, poly sheeting, socks, ect.

#2 CONTROL the spill overflow and bypass area of failure

- Bypass the obstructed line by pumping the spillage into another non-restricted line or vacuum with vactor truck

#3 CLEANUP the affected areas to ensure public health and safety

- Remove all visible debris
- Wash down and contain run-off being careful not to wash sewage into storm drain system
- Determine whether to disinfect or not to disinfect?
  - Consider requirements of other agencies
  - Consider beneficial use of receiving waters
  - Consider the uses and ownership of affected properties
- Clean all hard/soft surfaces

Spill Definitions

Minor spill

A minor spill is a sewage spill that is contained and can be effectively and satisfactorily cleaned up by city personnel, and does not require regulatory notification.

A minor *inside* spill is one that:

1. Is confined to the affected drain area and does not enter other rooms.
2. Does not contaminate carpet, furniture or other homeowner belongings that require specialized cleaning and disinfection.
3. Does not pose a threat to public health.

A minor *outside* spill is one that:

1. Is less than 50 gallons: or
2. Is between 50 and 1000 gallons and does not occur with in 50 feet of human habitation, does not contaminate public waters, does not pose a threat to public health and/or the environment, and can be cleaned up by city personnel.

Major Spill

A major spill is a sewage spill that contaminates the homeowner's property inside the home, can not be effectively and satisfactorily cleaned up by city personnel, and requires regulatory notification.

A major *inside* spill is one that:

1. Spreads beyond the immediate drain area and into other living areas.
2. Contaminates wall-to-wall carpets, furniture or other homeowner's belongings that require specialized cleaning or disinfection.
3. Poses a threat to public health.

A major *outside* spill is one that:

1. Is greater than 1000 gallons.
2. Is more than 50 gallons but occurs within 50 feet of human habitation, contaminates public water and/or poses a threat to public health and/or the environment.

Any Sewage spill over 1,000 gallons shall be reported to the California Regional Water Quality Control Board – Central Valley Region @ 1- 916-255-3000

Safety

Whenever City personnel respond to a report of an overflow/spill, they may encounter an emergency situation that requires immediate action. The most critical aspect of resolving an incident of this nature is to **safely and competently** perform the actions necessary to return the damage equipment or facility to operation as soon as possible.

The most important item to remember during this type of incident is that safe operations both to the employee and the public always take precedence over expediency or short cuts.

Depending on the nature or cause of the overflow/spill, personnel may be performing mechanical or electrical repairs at a pump station, removing a mainline blockage with the vactor truck or repairing a damaged section of pipeline. At this point, it is essential that all applicable safety procedures are followed so that the response does not cause the situation to escalate.

Typical responses may require personnel to implement the following types of safety procedures:

- Lockout/tagout of equipment for repairs
- Confined space entry procedures
- Traffic control procedures at site
- Equipment and/or vehicle operation
- Use of personnel protective equipment

Another important aspect of responding to an overflow/spill is the ability to maintain adequate communication via two-way radio and/or cellular telephone. Responders may need to call for additional resources as the situation may warrant as well as to notify other personnel and supervisors of the situation.

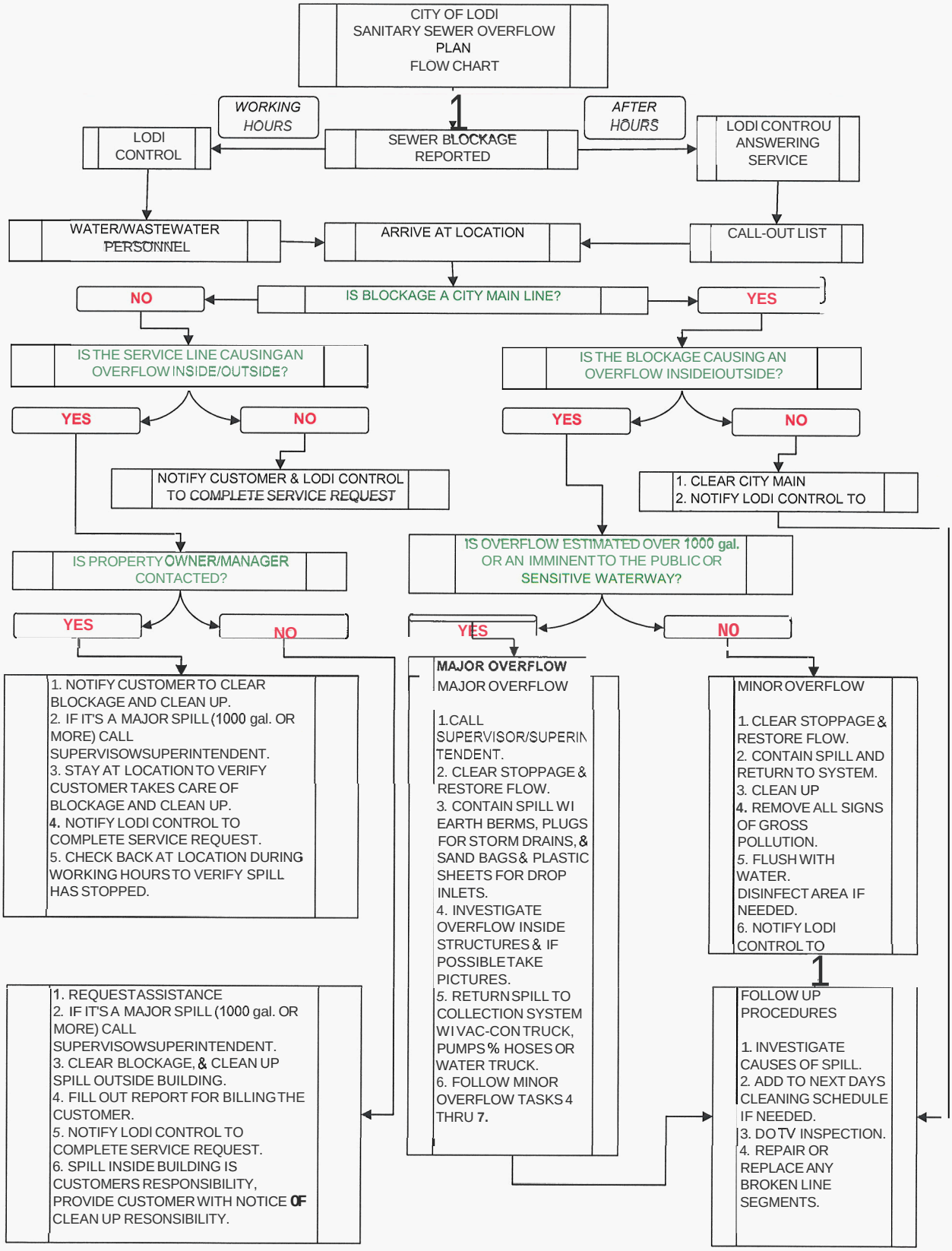
CITY OF LODI
SANITARY SEWER OVERFLOW
PLAN
FLOW CHART
WORKING HOURS
AFTER HOURS
LODI CONTROL
SEWER BLOCKAGE REPORTED
LODI CONTROU ANSWERING SERVICE
WATER/WASTEWATER PERSONNEL
ARRIVE AT LOCATION
CALL-OUT LIST
NO
IS BLOCKAGE A CITY MAIN LINE?
YES
IS THE SERVICE LINE CAUSINGAN OVERFLOW INSIDE/OUTSIDE?
IS THE BLOCKAGE CAUSING AN OVERFLOW INSIDEIOUTSIDE?
YES
NO
YES
NO
NOTIFY CUSTOMER & LODI CONTROL TO COMPLETE SERVICE REQUEST
1. CLEAR CITY MAIN
2. NOTIFY LODI CONTROL TO
IS PROPERTY OWNER/MANAGER CONTACTED?
IS OVERFLOW ESTIMATED OVER 1000 gal. OR AN IMMINENT TO THE PUBLIC OR SENSITIVE WATERWAY?
YES
NO
YES
NO
1. NOTIFY CUSTOMER TO CLEAR BLOCKAGE AND CLEAN UP.
2. IF IT'S A MAJOR SPILL (1000 gal. OR MORE) CALL SUPERVISOWSUPERINTENDENT.
3. STAY AT LOCATION TO VERIFY CUSTOMER TAKES CARE OF BLOCKAGE AND CLEAN UP.
4. NOTIFY LODI CONTROL TO COMPLETE SERVICE REQUEST.
5. CHECK BACK AT LOCATION DURING WORKING HOURS TO VERIFY SPILL HAS STOPPED.
MAJOR OVERFLOW
MAJOR OVERFLOW
1.CALL SUPERVISOR/SUPERIN TENDENT.
2. CLEAR STOPPAGE & RESTORE FLOW.
3. CONTAIN SPILL WI EARTH BERMS, PLUGS FOR STORM DRAINS, & SAND BAGS & PLASTIC SHEETS FOR DROP INLETS.
4. INVESTIGATE OVERFLOW INSIDE STRUCTURES & IF POSSIBLE TAKE PICTURES.
5. RETURN SPILL TO COLLECTION SYSTEM WI VAC-CON TRUCK, PUMPS % HOSES OR WATER TRUCK.
6. FOLLOW MINOR OVERFLOW TASKS 4 THRU 7.
MINOR OVERFLOW
1. CLEAR STOPPAGE & RESTORE FLOW.
2. CONTAIN SPILL AND RETURN TO SYSTEM.
3. CLEAN UP
4. REMOVE ALL SIGNS OF GROSS POLLUTION.
5. FLUSH WITH WATER. DISINFECT AREA IF NEEDED.
6. NOTIFY LODI CONTROL TO
1. REQUEST ASSISTANCE
2. IF IT'S A MAJOR SPILL (1000 gal. OR MORE) CALL SUPERVISOWSUPERINTENDENT.
3. CLEAR BLOCKAGE, & CLEAN UP SPILL OUTSIDE BUILDING.
4. FILL OUT REPORT FOR BILLING THE CUSTOMER.
5. NOTIFY LODI CONTROL TO COMPLETE SERVICE REQUEST.
6. SPILL INSIDE BUILDING IS CUSTOMERS RESPONSIBILITY, PROVIDE CUSTOMER WITH NOTICE OF CLEAN UP RESONSIBILITY.
FOLLOW UP PROCEDURES
1. INVESTIGATE CAUSES OF SPILL.
2. ADD TO NEXT DAYS CLEANING SCHEDULE IF NEEDED.
3. DO TV INSPECTION.
4. REPAIR OR REPLACE ANY BROKEN LINE SEGMENTS.

SPILL RESPONSE PLAN

{Public Right of Way)

1. Upon Arrival assess the severity of the spill and determine the manpower and equipment needed. Contain spillage immediately if possible.
2. Locate and clear stoppage and restore unobstructed flow.
3. Prevent contact between public and spill, utilize barricades, cones, and for dangerous traffic areas contact police for assistance in traffic control.
4. Once the blockage has been relieved or problem corrected and the overflow has ceased, every effort shall be made to contain the sewage that has spilled
5. If there is flooding or property damage, notify supervisor immediately.
6. Take necessary photographs of the affected area for city records.
7. Solids and debris should be raked up, bagged and disposed of at the White Slough Water Pollution Control Facility or returned to an unobstructed sewer main. Wash down and sanitize affected areas.
8. Do not volunteer or disown City liability. Instead, neutral comments should be used by City personnel indicating that the liability issue *cannot* be addressed until all of the relevant information has been evaluated.
9. After clean up is complete remove barricades to restore public access after area is safe.
10. Contact Lodi control to complete service request.
11. The responding employee shall complete the Sewage Overflow Report and turn it in to the Water/Wastewater Supervisor.

SPILL RESPONSE PLAN

{Private Property)

1. Upon Arrival assess the severity of the spill and determine the manpower and equipment needed. Contain spillage immediately if possible. If it is determined that it is a customer problem and not a city main line blockage, notify the customer to clear their service line and clean up the spill. Try to contain the spill to the property, if you can not contain the spill call for assistance.
2. If it is a city problem, Locate and clear stoppage and restore unobstructed flow.
3. Prevent contact between public and spill, utilize barricades, cones, and for dangerous traffic areas contact police for assistance in traffic control.
4. Once the blockage has been relieved or problem corrected and the overflow has ceased, every effort shall be made to contain the sewage that has spilled to public property.
5. Obtain customer/property owner information, including Name, Address Phone Number, and the date and time they where notified.
6. If there is flooding or property damage, notify supervisor immediately.
7. Take necessary photographs of the affected area for city records.
8. Solids and debris on public property should be raked up, bagged and disposed of at the White Slough Water Pollution Control Facility or returned to an unobstructed sewer main. Wash down and sanitize affected areas.
9. Do not volunteer or disown City liability. Instead, neutral comments should be used by City personnel indicating that the liability issue *cannot* be addressed until all of the relevant information has been evaluated.
10. After clean up is complete remove barricades to restore public access after area is safe.
11. Supply the customer with the customer information sheet.
12. For major spills caused by the city, additional assistance may be required, including hotel/motel accommodations. Details and arrangements for Major spills shall be the responsibility of the Water/Wastewater Supervisor.
13. Contact Lodi control to complete service request.
14. The responding employee shall complete the Sewage Overflow Report and turn it in to the Water/Wastewater Supervisor.

INCIDENT STAFF RESPONSIBILITIES

The Water/Wastewater Superintendent and the Water/Wastewater Supervisor are responsible to ensure that all Operations and Maintenance personnel are trained in and follow these procedures.

The responding Employee is responsible for filling out the sewage overflow report form.

The Water/Wastewater Superintendent or the Water/Wastewater Supervisor is responsible for notifying regulatory agencies within the required time frames:

All spills (regardless of size) shall be reported to State of California Regional Water Quality Control Board – Central Valley Region within 24 hours at:
1-916-255-3000

All **Major** spills shall be reported verbally to State of California Regional Water Quality Control Board – Central Valley Region at: **1-916-255-3000**
And State of California Office of Emergency Services at: **1-800-852-7550**
Immediately. A written report shall also be submitted to the State of California Regional Water Quality Control Board – Central Valley Region within 5 Days.

A sewage spill that enters the storm system and may be a threat to the environment or sensitive waterways (i.e. Woodbridge Irrigation Canal, Mokelumne River, Lodi Lake, or Mallard Lake.) shall also be reported to the State of California Department of Fish and Game immediately at: **1-916-355-7040.**

All hazardous materials contact the Lodi Fire Department Immediately at: **369-3531**

TRAINING PLAN

Training is the key to the success of this plan. Employees will participate in an orientation exercise every six months and one tabletop or functional full –scale exercise shall be conducted annually.

ORIENTATION EXERCISE – This exercise will consist of a lecture with handouts and overheads covering all aspects of the sewage spill response plan. Each employee will learn individual duties and responsibilities and learn how to effectively use this plan and work together as a team.

TABLETOP EXERCISE – In this exercise, equipment or deployment of resources will not be used. All activities will be simulated. Employees will learn through discussion and the use of a facilitator. The exercise will focus on the events leading to a potentially large spill and how to mitigate the effects.

FUNCTIONAL FULL SCALE EXERCISE – This exercise will simulate a large scale spill where employees will respond to a mock spill. Equipment will be deployed including sewer trucks, pumps, and containment equipment. Backup resources will be controlled and included in this exercise. A confined space entry exercise *will not be conducted and a manhole entry will not be done.* Following any of the above mentioned plans a critique will be conducted in order to refine or improve this plan.

CUSTOMER INFORMATION SHEET

The following list of contacts are for clean up and water damage, they where chosen at random out of the yellow pages, for more details look in the yellow pages under carpets. The companies listed below are all 24 hour services. The city of Lodi will not recommend or endorse any one company.

Primo Clean – Lodi
209-333-7272

Servpro – Lodi
209-368-6119

Coit Restoration – Lodi
209-333-0794

Dennis Clean-n-brite - Lodi
209-334-0581

Kleen-Pro – Lodi
209-366-1081

Marlins – Lodi
209-367-7949

If you feel you have a claim against the city, contact the city clerk's office at city hall and obtain all the necessary forms to be filled out. Further instructions will be given to you at that time.

City of Lodi contact numbers:

Water/wastewater Superintendent – 333-6740

Risk Manager – 333-6704

City attorney – 333-6701

City Manager – 333-6700

Note: Wastewater can be hazardous to human health and should be handled with caution and by professionally trained personnel

City of Lodi Public Works Department

MAJOR SEWAGE OVERFLOW REPORT
(Attach Additional Sheets if Needed)

Incident Commander_____ Time Arrived_____ Date_____

Location of Overflow (Address/Cross Street/Manhole Numbers):

_____

_____

_____

Map Attached **YES NO** (circle one)

Time Overflow Reported_____ Amount of Overflow_____+/- Gallons

Duration of Overflow_____ Time Overflow Stopped_____

Type of Overflow: Domestic_____Industrial_____storm_____(check one)

Resources Used: (Attach a completed Water/Wastewater Inventory Report.)

Complete written summary of sewage overflow. Refer to Incident Commander's responsibilities.
(Attach additional sheets if needed.)

_____

_____

_____

_____

_____

_____

AGENCY NOTIFICATION:

☐ **CRWQCB - CVR** (CALIFORNIA REGIONAL WATER QUALITY CONTROL BOARD - CENTRAL VALLEY REGION)

1-916-255-3000

Person Notified _____ Date & Time _____

☐ **OES** (CALIFORNIA OFFICE OF EMERGENCY SERVICES)

1-800-852-7550

Person Notified _____ Date & Time _____

☐ **SCDFG** (STATE OF CALIFORNIA DEPARTMENT OF FISH AND GAME)

Days 1-916-355-7040 or Lodi Police Department 333-6727

Person Notified _____ Date & Time _____

☐ **LFD** (LODI FIRE DEPARTMENT)

All Hazardous Materials 369-3531

Person Notified _____ Date & Time _____

☐ **OTHER** (PROPERTY OWNERS, APARTMENT/PROPERTY MANAGERS, RESIDENTS, PLUMBERS, CONTRACTORS)

Title/Resident/Company _____ Phone No. _____

Person Notified _____ Date & Time _____

Summary of Conversation:

_____

_____

_____

☐ **OTHER** (PROPERTY OWNERS, APARTMENT/PROPERTY MANAGERS, RESIDENTS, PLUMBERS, CONTRACTORS)

Title/Resident/Company _____ Phone No. _____

Person Notified _____ Date & Time _____

Summary of Conversation:

_____

_____

_____

_____

TABLE 'A'

ESTIMATED SSO FLOW OUT OF M/H WITH COVER IN PLACE

24" COVER			
Height of spout above M/H rim 'H' in height	SSO flow 'Q' in gpm	SSO flow 'Q' in MGD	Min. Sewer size in which these flows are possible
1/4	1	0.001	
1/2	3	0.004	
3/4	6	0.008	
1	9	0.013	
1 1/4	12	0.018	
1 1/2	16	0.024	
1 3/4	21	0.030	
2	25	0.037	
2 1/4	31	0.045	
2 1/2	38	0.054	
2 3/4	45	0.065	
3	54	0.077	
3 1/4	64	0.092	
3 1/2	75	0.107	
3 3/4	87	0.125	
4	100	0.145	
4 1/4	115	0.166	
4 1/2	131	0.189	
4 3/4	148	0.214	
5	166	0.240	
5 1/4	185	0.266	
5 1/2	204	0.294	
5 3/4	224	0.322	6"
6	244	0.352	
6 1/4	265	0.382	
6 1/2	286	0.412	
6 3/4	308	0.444	
7	331	0.476	
7 1/4	354	0.509	
7 1/2	377	0.543	
7 3/4	401	0.578	8"
8	426	0.613	
8 1/4	451	0.649	
8 1/2	476	0.686	
8 3/4	502	0.723	
9	529	.0761	

36" COVER			
Height of spout above M/H rim 'H' in height	SSO flow 'Q' in gpm	SSO flow 'Q' in MGD	Min. Sewer size in which these flows are possible
1/4	1	0.002	
1/2	4	0.006	
3/4	8	0.012	
1	13	0.019	
1 1/4	18	0.026	
1 1/2	24	0.035	
1 3/4	31	0.044	
2	37	0.054	
2 1/4	45	0.065	
2 1/2	55	0.079	
2 3/4	66	0.095	
3	78	0.113	
3 1/4	93	0.134	
3 1/2	109	0.157	
3 3/4	127	0.183	
4	147	0.211	
4 1/4	169	0.243	
4 1/2	192	0.276	
4 3/4	217	0.312	6"
5	243	0.350	
5 1/4	270	0.389	
5 1/2	299	0.430	
5 3/4	327	0.471	
6	357	0.514	
6 1/4	387	0.558	8"
6 1/2	419	0.603	
6 3/4	451	0.649	
7	483	0.696	
7 1/4	517	0.744	
7 1/2	551	0.794	
7 3/4	587	0.845	10"
8	622	0.896	
8 1/4	659	0.949	
8 1/2	697	1.003	
8 3/4	734	1.057	
9	773	1.113	

Example Overflow Estimation:

The maintenance hole cover is seated and slightly elevated on a 24" casting. The maximum height of the discharge above the rim is 5 1/4 inches. According to table A, these conditions would yield an SSO of 185 gallons per minute.

FLOW OUT OF M/H WITH COVER IN PLACE

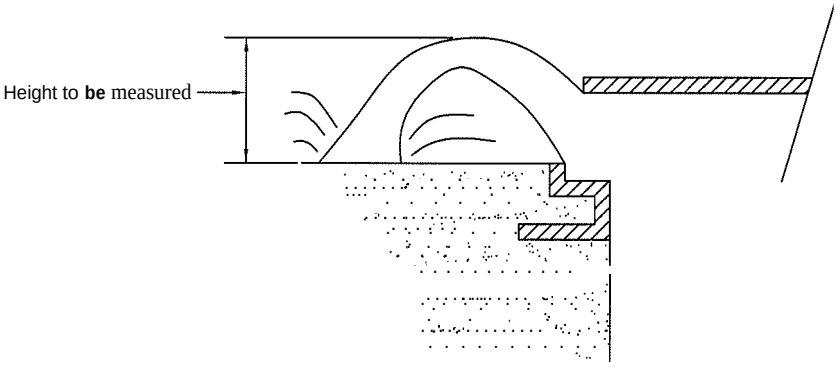

TABLE 'B'

ESTIMATED SSO FLOW OUT OF M/H WITH COVER REMOVED

24" Frame			
Water Height above M/H frame 'H' in inches	SSO FLOW 'Q' in gpm	SSO FLOW 'Q' in MGD	Min. Sewer size in which these flows are possible
1/8	28	0.04	
1/4	62	0.09	
3/8	111	0.16	
1/2	160	0.23	
5/8	215	0.31	6"
3/4	354	0.51	8"
7/8	569	0.82	10"
1	799	1.15	12"
1 1/8	1,035	1.49	
1 1/4	1,340	1.93	15"
1 3/8	1,660	2.39	
1 1/2	1,986	2.86	
1 5/8	2,396	3.45	
1 3/4	2,799	4.03	
1 7/8	3,132	4.51	
2	3,444	4.96	21"
2 1/8	3,750	5.40	
2 1/4	3,986	5.74	
2 3/8	4,215	6.07	
2 1/2	4,437	6.39	
2 5/8	4,569	6.58	24"
2 3/4	4,687	6.75	
2 7/8	4,799	6.91	
3	4,910	7.07	

36" Frame			
Water Height above M/H frame 'H' in inches	SSO FLOW 'Q' in gpm	SSO FLOW 'Q' in MGD	Min. Sewer size in which these flows are possible
1/8	49	0.07	
1/4	111	0.16	
3/8	187	0.27	6"
1/2	271	0.39	
5/8	361	0.52	8"
3/4	458	0.66	
7/8	556	0.80	10"
1	660	0.95	12"
1 1/8	1,035	1.49	
1 1/4	1,486	2.14	15"
1 3/8	1,951	2.81	
1 1/2	2,424	3.49	18"
1 5/8	2,903	4.18	
1 3/4	3,382	4.87	
1 7/8	3,917	5.64	24"
2	4,458	6.42	
2 1/8	5,000	7.20	
2 1/4	5,556	8.00	
2 3/8	6,118	8.81	
2 1/2	6,764	9.74	
2 5/8	7,403	10.66	
2 3/4	7,972	11.48	30"
2 7/8	8,521	12.27	
3	9,062	13.05	
3 1/8	9,604	13.83	
3 1/4	10,139	14.60	
3 3/8	10,625	15.30	36"
3 1/2	11,097	15.98	
3 5/8	11,569	16.66	
3 3/4	12,035	17.33	
3 7/8	12,486	17.98	
4	12,861	18.52	
4 1/8	13,076	18.83	
4 1/4	13,285	19.13	
4 3/8	13,486	19.42	

Example Overflow Estimation:

The maintenance hole cover is off and the flow coming out of a 36" frame maintenance hole at one inch (1") height will be approximately 660 gallons per minute.

FLOW OUT OF MIH WITH COVER REMOVED (TABLE "B")

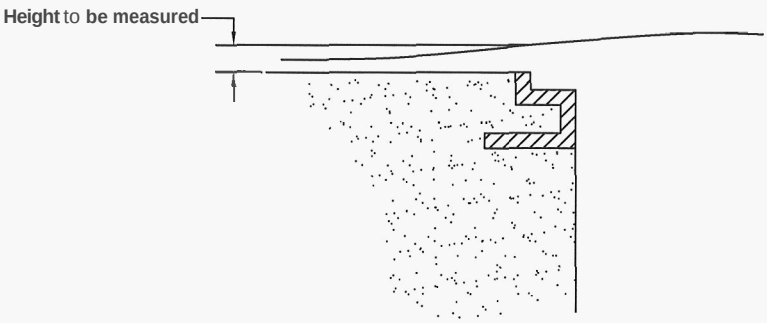

TABLE 'C'

ESTIMATED SSO FLOW OUT OF M/H PICK HOLE

TABLE 'C'	
Height of spout above M/H cover 'H' in inches	SSO FLOW 'Q' in gpm
1/8	1.0
1/4	1.4
3/8	1.7
1/2	1.9
5/8	2.2
3/4	2.4
7/8	2.6
1	2.7
1 1/8	2.9
1 1/4	3.1
1 3/8	3.2
1 1/2	3.4
1 5/8	3.5
1 3/4	3.6
1 7/8	3.7
2	3.9
2 1/8	4.0
2 1/4	**4.1**
2 3/8	4.2
2 1/2	4.3
2 5/8	4.4
2 3/4	4.5
2 7/8	4.6
3	4.7
3 1/8	4.8
3 1/4	4.9
3 3/8	5.0
3 1/2	5.1
3 5/8	5.2
3 3/4	5.3
3 7/8	5.4
4	5.5
4 1/8	5.6
4 1/4	5.6
4 3/8	5.7
4 1/2	5.8
4 5/8	5.9
4 3/4	6.0
4 7/8	6.0
5	6.1

TABLE 'C'	
Height of spout above MIH cover 'H' in inches	SSO FLOW 'Q in gpm
5 1/8	6.2
5 1/4	**6.3**
5 3/8	**6.3**
5 1/2	6.4
5 5/8	6.5
5 3/4	**6.6**
5 7/8	**6.6**
6	6.7
6 1/8	6.8
6 1/4	6.8
6 3/8	6.9
6 1/2	7.0
6 5/8	7.0
6 3/4	7.1
6 7/8	7.2
7	7.2
7 1/8	7.3
7 1/4	7.4
7 3/8	7.4
7 1/2	7.5
7 5/8	7.6
7 3/4	7.6
7 7/8	7.7
8	7.7
8 1/8	7.8
8 1/4	7.9
8 3/8	7.9
8 1/2	8.0
8 5/8	8.0
8 3/4	8.1
8 7/8	8.1
9	8.2
9 1/8	8.3
9 1/4	8.3
9 3/8	8.4
9 1/2	8.4
9 5/8	8.5
9 3/4	8.5
9 7/8	8.6
10	8.7

Unrestricted M/H cover will start *to* **lift**

Note: This chart is based on a 7/8 inch diameter pick hole.

The formula is used to develop Table 'C' is Q=CcVA, where Q is equal to the quantity of the flow in gallons per minute, Cc is equal to the coefficient of contraction (.63), V is equal to the velocity of the overflow, and A is equal to the area of the pick hole. If all units are in feet, the quantity will be calculated in cubic feet per second, which when multiplied by 448.8 will give the answer in gallons per minute. (One cubic foot per second is equal to 448.8 gallons per minute, hence this conversion method.)

Example Ovemow Estimation:

The maintenance hole cover is in place and the height of the water coming out of the pick hole seven-eights of an inch in diameter (7/8") is 3 inches (3"). This will produce an SSO flow of approximately 4.7 gallons per minute.

FLOW OUT OF M/H WITH COVER IN PLACE

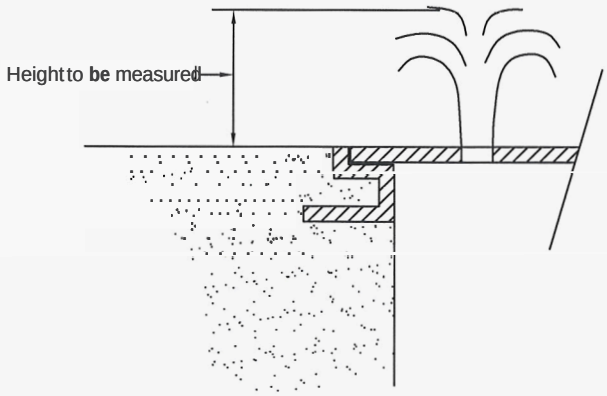

FOG Control Program Documents

Appendix G includes the following:

G-1 Fats, Oils, and Grease (FOG) Characterization Data Form

G-2 Addendum to Lodi Municipal Code - Section Blank.xxx Discharges of Fats, Oils, and Grease from Food Service Establishments (FSEs)

G-3 Hot Spot Cleaning Schedule

Group Description	Description	Total
Bakeries	Bakery – Bread/Other, except Cookies/Crackers	
Bakeries Total		
Catering	Catering – (Direct Sell)	
Catering Total		
Grocery	Grocery – w/Bakery or Deli	
	Grocery – w/Meat Market	
Grocery Total		
Hotels w/Restaurant	Hotels w/Restaurant	
Hotels w/Restaurant Total		
Industries	Bakery – Breadlother, except Cookies/Crackers	
	Industries – Candy & Confectionary	
	Industries – Canned Fruits, Vegetables, Preserves, Etc.	
	Industries – Chocolate & Cocoa	
	Industries – Creamery Butter	
	Industries – Dog & Cat Food	
	Industries – Flour & Grain Mill Products	
	Industries – Fluid Milk	
	Industries – Ice Cream & Frozen Desserts	
	Industries – Meat Packing	
	Industries – Meat/Diary/By-Products	
	Industries – Pickled Fruits & Vegetables, Sauces, Etc.	
	Industries – Poultry Processing	
	Industries – Salted & Roasted Nuts	
Industrial Total		
Meat Markets	Market – Meat	
	Market – Meat & Fish	
Meat Markets Total		
Restaurants	Eating – Fast Food	
	Eating – Sit Down Dining	
Restaurants Total		
Strip Malls	Strip Mall – w/Multiple Impact	
	Strip Mall – w/Restaurant	
Strip Malls Total		
Grand Total		

DRAFT
ORDINANCE NO.

ORDINANCE OF THE COUNCIL OF THE CITY OF LODI ADDING CHAPTER 14.14 TO TITLE 14 OF THE LODI MUNICIPAL CODE REGARDING FATS, OILS AND GREASE

THE CITY OF LODI ORDAINS:

SECTION 1. Chapter 14.14 of Title 14 of the Lodi Municipal Code is hereby added to read as follows:

Chapter 14.14 Discharges of Fats, Oils, and Grease from Food Service Establishments.

ARTICLE I. GENERAL PROVISIONS

14.14.010 Purpose.

A. The purpose of this chapter is to facilitate the maximum beneficial use of the City's sewer services and facilities while preventing blockages of the sewer lines resulting from discharges of fats, oils, and grease (FOG) into the public sewer, and to specify appropriate FOG discharge requirements for food service establishments (FSEs) as defined herein.

B. This chapter shall apply to both direct and indirect discharge of wastewater containing FOG carried to the public sewer.

C. The provisions set forth in this chapter are designed to ensure compliance with federal, state and local laws and regulations, and *to* allow the City to meet applicable standards.

D. This chapter also establishes quantity and quality standards on all discharges containing FOG, which may alone or collectively cause or contribute to FOG accumulation in the sewer facilities causing or potentially causing or contributing to the occurrence of sanitary sewer overflows (SSOs).

14.14.020 Definitions.

Unless otherwise defined herein, terms related to water quality shall be as adopted in the latest edition of Standard Methods for Examination of Water and Wastewater, published by the American Public Health Association, the American Water Works Association and the Water Environment Federation. Testing procedures for waste constituents and characteristics shall be as provided in 40 Code of Federal Regulations 136.

Subject to the foregoing, the meaning of the terms used in this chapter shall be as follows:

A. "Fats, oils, and grease (FOG)" means any substance such as vegetable or animal product that is used in, or is a byproduct of, the cooking or food preparation process, and that becomes or may become viscous, or solidifies or may solidify, with a change in temperature or other conditions.

B. "Food Service Establishment (FSE)" means a facility, including but not limited to, any commercial entity within the boundaries of the City, operating in a permanently constructed structure such as a room, building or place, or portion thereof, maintained, used or operated for the purpose of storing, preparing, serving or manufacturing, packaging or otherwise handling food for sale to other entities, or for consumption by the public, its members or employees, and which has any process or device that uses or produces FOG, or grease vapors, steam, fumes, smoke or odors that are required to be removed by an exhaust hood pursuant to California Health and Safety Code section 114149.1 or in accordance with the California Uniform Retail Food Facilities Law (CURFFL) (California Health and Safety Code sections 113700, *et seq.).* A limited food preparation establishment is not considered an FSE when engaged only in reheating, hot holding, or assembly of ready to eat food products, provided that there is no wastewater discharge containing a significant amount of FOG.

C. "FOG wastewater discharge permit (FOG WDP)" means a permit issued by the City, subject to the requirements and conditions established by the City, authorizing a permittee to discharge wastewater from a FSE into the public sewer.

D. "Best management practices (BMPs)" means activities, prohibitions, maintenance procedures and other management practices to prevent or reduce the direct or indirect introduction of FOG into the public sewer.

E. "Change in operations" means any change in the ownership, food types, or operational procedures that have the potential to change the amount of FOG discharged by FSEs in an amount that alone or collectively causes or creates a potential for SSOs to occur.

F. "City" means the City of Lodi, a municipal corporation.

G. "Collection system" means portions of the public sewer consisting of all pipes, sewers and conveyance systems conveying wastewater to the publicly owned treatment works (POTW), excluding privately owned sewer service lateral line connections.

H. "Compliance schedule" means a time schedule, enforceable under the provisions of this chapter that contains increments of progress (e.g. milestones, in the form of dates). These milestones shall be for the commencement and/or completion of major events leading to the construction and operation of additional pretreatment facilities or the implementation of policies, procedures or operational management techniques required for permittees to comply with all applicable federal, state or local environmental regulations which may directly or indirectly affect the quality of the permittee's wastewater.

I. "Composite sample" means a collection of individual samples obtained at selected intervals based on an increment of either flow or time. The resulting mixture (composite sample) forms a representative sample of the waste stream discharged during the sample period.

J. "Director" means the City's Director of Public Works or his or her authorized representative.

K. "Discharger" means any person who discharges or causes a discharge of wastewater directly or indirectly to the public sewer.

L. "Effluent" means any wastewater outflow from a FSE or privately owned sewer service lateral that is discharged into the public sewer.

M. "Enforcement officer" means any City employee or agent of the City with authority to enforce the provisions of this chapter and the authority to make any decision, on behalf of the Director, required or called for by this chapter.

O. "Food grinder" means any device installed in the plumbing or sewage system for the purpose of grinding food or food waste.

P. "Grab sample" means a sample taken from a waste stream on a one-time basis without regard to the flow in the waste stream and without consideration of time.

Q. "Grease control device" means any grease interceptor, grease trap or other mechanism, device or process which attaches to, or is applied to, wastewater plumbing fixtures and lines, the purpose of which is to trap, collect or treat FOG prior to it being discharged into the public sewer. A grease control device may also include any other proven method to reduce FOG subject to the approval of the Director.

R. "Grease disposal mitigation fee" means a fee charged to a permittee when there are physical limitations to the property that make the installation of the usual and customary grease interceptor or grease control device for the FSE, impossible or impracticable. The grease disposal mitigation fee is intended to cover the costs of increased maintenance of the public sewer, for inspection and cleaning of FOG that a usual and customary, and properly maintained, grease control device would otherwise prevent from entering the public sewer.

S. "Grease interceptor" means a multi-compartment device that is generally required, according to the California Plumbing Code, to be located underground between an FSE and the connection to the public sewer. These devices primarily use gravity to separate FOG from the wastewater as it moves from one compartment to the next. To be effective, these devices must be cleaned, maintained and have the FOG removed and disposed of in a proper manner, at regular intervals.

T. "Grease trap" means a grease control device that is used to serve individual plumbing fixtures and should only be used in those cases where the use of a grease interceptor or other grease control device is determined by the Director to be

impossible and/or impracticable. A grease trap is typically installed indoors, under or near a dishwashing sink.

U. "Hot spots" mean areas in sewer lines that have experienced SSOs or that must be cleaned or maintained frequently to avoid blockages of the public sewer.

V. "Inflow" means water entering the public sewer system through a direct stormwater or runoff connection which may cause an almost immediate increase in wastewater flows in the public sewer.

W. "Infiltration" means water entering the public sewer from the ground through such means as defective pipes, pipe joints, connections or manhole walls

X. "Inspector" means a person authorized by the Director to inspect any existing or proposed wastewater generation, conveyance, processing and/or disposal facilities.

Y. "Interceptor" means a grease interceptor.

Z. "Manifest" means that receipt which is retained by a permittee for the disposal of FOG, recyclable wastes and/or liquid wastes.

AA. "New Construction" means any structure planned or under construction for which a sewer connection fee has not been paid.

BB. "Obstruction" means any discharge which, alone or in combination with discharges from other sources, inhibits or disrupts the public sewer, operations or is otherwise a violation of the Lodi Municipal Code, including, but not limited to its waste discharge requirements.

cc. "Permittee" means a Food Service Establishment that has received a Fats, Oils and Grease Wastewater Discharge Permit and is subject to the requirements and conditions established in this chapter or as otherwise established by the Director.

DD. "Person" means any individual, partnership, co-partnership, firm, company, association, society, corporation, joint stock company, trust, estate, governmental entity or any other legal entity, or their legal representatives, agents or assigns. The masculine gender shall include the feminine and the singular shall include the plural where indicated by context.

EE. "Publicly owned treatment works (POTW)" means as provided in section 14.26.030(39) of Chapter 14.26 of the Lodi Municipal Code.

FF. "Public sewer" means a sewer which is controlled by a public authority.

GG. "Remodeling" means any physical and/or operational change to a FSE causing a change in FOG quantity or consistency and/or that involves any one or a combination of the following:

1. Under slab plumbing in the food processing area.

2. A thirty percent (30%) increase in the net public seating area.

3. A thirty percent (30%) increase in the size of the kitchen area.

4. Any change in the size or type of food preparation equipment.

HH. "Sanitary sewer" means a sewer which carries sewage and to which storm, surface and ground waters are not intentionally admitted.

II. "Sewage" means a combination of the water carried waste from residences, business buildings, institutions and industrial establishments, together with such inflow and infiltration as may be present.

JJ. "Sewer facilities or system" means any and all facilities used for collecting, conveying, pumping, treating and disposing of sewage, wastewater and/or sludge.

KK. "Sewer lateral" means a building sewer as defined in the latest edition of the California Plumbing Code. It is the wastewater connection between the building's wastewater facilities and a public sewer.

LL. "Sludge" means any solid, semi-solid and/or liquid decant, subnate or supernate from a manufacturing process, utility service, or pretreatment facility.

MM. "Storm drain" means a pipe or conduit for carrying storm and surface waters and drainage, but excludes sewage and industrial wastes, other than unpolluted cooling water.

NN. "User" means any person who contributes, causes or permits the contribution of wastewater into the POTW.

OO. "Waste" means sewage and any and all other waste substances, liquid, solid, gaseous or radioactive, associated with human habitation or of human or animal nature, including such wastes placed within containers of whatever nature prior to and for the purpose of disposal.

PP. "Wastewater" means the liquid and water carrying industrial or domestic wastes from dwellings, commercial buildings, industrial facilities, FSEs and institutions, whether treated or untreated, which is discharged into or permitted to enter the POTW.

QQ. "Impartial Hearing Officer" Means a person appointed by the City to review FOG violations that are appealed in writing to the City Clerk.

ARTICLE II. REGULATIONS

14.14.030 FOG wastewater discharge permit (FOG WDP) required.

No person shall discharge, or cause to be discharged, any wastewater from FSEs directly or indirectly into the public sewer without first obtaining a FOG WDP pursuant to this chapter.

14.14.040 FOG discharge limitation.

No FSE shall discharge FOG, or cause FOG to be discharged into the public sewer that may accumulate and/or cause or contribute to blockages in the public sewer or the public sewer lateral which connects the FSE to the public sewer.

14.14.050 Public sewer overflows; public nuisance; abatement orders and cleanup costs.

Any FSE determined by the Director to have contributed to a sewer blockage, SSO or any public sewer obstruction resulting from the discharge of wastewater or waste containing FOG, shall be ordered to install and maintain a grease interceptor, and may be subject to a plan to abate the nuisance created by sewer line failures and blockages, SSOs or any other public sewer obstruction. SSOs may cause threat and injury to public health, safety, and welfare of life and property and are hereby declared public nuisances. Furthermore, sewer lateral failures and SSOs caused by FSEs alone or collectively, are the responsibility of the private property owner, FSE, and individuals who are responsible officers or owners of the FSE. If the Director determines that the public health and safety require the City to act immediately to contain and clean up any SSO caused by blockage of a private or public sewer lateral or system serving an FSE, or if the City so acts at the request of the property owner or operator of the FSE, or because of the failure of the property owner or FSE to abate the condition causing immediate threat of injury to the health, safety, welfare, or property of the public, the City's costs for such abatement may be entirely borne by the property owner or the owner/operator of the FSE, and individuals who are responsible officers or owners of the FSE and may constitute a debt to the City, due and payable upon the City's request for reimbursement of such costs depending upon the Director's determination of the cause of the SSO.

14.14.060 Best management practices (BMPs) required.

Every FSE shall implement BMPs in its operations, in accordance with the requirements and guidelines established by the Director, to minimize the discharge of FOG to the grease control device and/or the public sewer. Detailed requirements for BMPs shall be specified in the FOG WDP and all FSEs are required, at a minimum, to comply with the BMPs set forth therein as well as any additional BMPs established by the Director. BMPs may include, but are not limited to, kitchen practices and employee training procedures that are essential in minimizing FOG discharge to the public sewer.

14.14.070 Prohibitions.

FSEs are prohibited from doing any of the following:

A. Installing food grinders in the plumbing system of new construction. All FSEs that undergo a change in operations or remodeling shall remove any existing food grinders concurrent with such change or remodeling, except as otherwise expressly allowed by the Director.

B. Introducing any additives into an FSE's plumbing system, grease trap and/or grease interceptor for the purpose of emulsifying FOG, biologically and/or chemically treating FOG for grease remediation and/or as a supplement to grease interceptor maintenance, unless a specific written authorization from the Director is first obtained.

C. Disposing waste cooking oil into the public sewer or storm drain. All waste cooking oils shall be collected and stored properly in receptacles such as rendering bins, barrels or drums for recycling or other acceptable methods of disposal.

D. Discharging wastewater with temperatures in excess of 140°F into any grease control device, including grease traps and grease interceptors.

E. Discharging wastes containing fecal materials from toilets, urinals, washbasins or other fixtures to waste lines directed to grease interceptors and/or other grease control devices, or vice versa.

F. Discharging a FOG and solid materials removed from a grease control device to the public sewer. Grease removed from grease interceptors shall be waste hauled to an approved disposal site as part of the operation and maintenance requirements for grease interceptors.

G. Operating grease interceptors with FOG and solids accumulation exceeding twenty-five percent (25%) of the design hydraulic depth of the grease interceptor. The grease and solids layers combined shall not exceed 25% of the total interceptor liquid depth to avoid overloading the interceptor.

H. Discharging FOG and other pollutants above the local discharge limits set forth in Lodi Municipal Code section 14.26.140.

14.14.080 FOG pretreatment required.

Every FSE is required at the time of construction, remodel, and/or change in operations to install, operate and maintain an approved type and adequately sized grease interceptor necessary to maintain compliance with the objectives of this chapter, subject to the variance and waiver provisions of section 13.12.115. The grease interceptor shall be adequate to separate and remove FOG contained in wastewater from FSEs prior to discharge to the public sewer as determined by the then current Uniform Plumbing Code (UPC). Fixtures, equipment, and drain lines located in the food preparation and clean up areas of any FSEs that are a source of FOG discharges shall be connected to the grease interceptor.

Compliance shall be established as follows:

A. New construction of FSEs

New construction of any FSE shall include complete installation of an approved type and adequately sized grease interceptor, with a minimum size of 1,000 gallons, prior to commencing discharges of wastewater to the public sewer.

B. Existing FSEs

1. Any existing FSE, which, in the Director's determination, has caused or contributed to grease-related blockage in the public sewer, has one or more sewer laterals connected to hot spots and/or has contributed significant FOG to the public sewer, shall be deemed to have reasonable potential to adversely impact the public sewer and shall be required to install grease interceptors within one hundred eighty (180) days upon issuance of written notification by the Director.
2. Any existing FSE or FSE that changes ownership or that undergoes remodeling and/or a change in operations, as defined in this chapter, shall be required to install a grease interceptor or to obtain a variance or waiver in accordance with section 14.14.130.

14.14.090 Commercial properties.

Any owner of a commercial property where FSEs are located or their official designee shall be responsible for the installation and maintenance of a grease interceptor serving multiple FSEs that are located on a single parcel.

14.14.100 Grease interceptor requirements,

A. Any FSE required by this chapter to provide FOG pretreatment shall install, operate, and maintain an approved type and adequately sized grease interceptor necessary to maintain compliance with the objectives of this chapter.

B. Grease interceptor sizing and installation shall conform to Chapter 10 Traps and Interceptors of the 2006 or most current edition of the Uniform Plumbing Code. Grease interceptors shall be constructed in accordance with the design approved by the Director and shall have a minimum of two compartments with fittings designed for grease retention. The Director reserves the right to make determinations of grease interceptor size, adequacy, location and need, based on review of relevant information, including, but not limited to grease interceptor performance, waste stream characteristics, facility location, maintenance needs, and or inspection needs.

C. The grease interceptor shall be installed at a location where it shall be at all times easily accessible for inspection, cleaning, and removal of accumulated grease.

D. An access manhole, with a minimum diameter of twenty-four (24) inches, shall be provided over each grease interceptor chamber and each sanitary tee. The access manholes shall extend at least to finished grade and be designed and maintained to prevent water inflow or infiltration. The manholes shall also have readily removable covers to facilitate inspection, grease removal, and wastewater sampling activities.

14.14.110 Grease trap requirements.

A. No new construction, change in operation or remodel of an FSE shall include installation of a grease trap without prior express written permission from the Director.

B. Existing grease traps shall be maintained in efficient operating condition by daily removal of the accumulated grease.

C. Grease traps shall be maintained free of all food residues and any FOG waste removed during the cleaning and scraping process.

D. Grease traps shall be inspected periodically to check for leaking seams and pipes, and for effective operation of the baffles and flow regulating device. Grease traps and their baffles shall be maintained free of all caked-on FOG and waste. Removable baffles shall be removed and cleaned during the maintenance process.

E. Dishwashers and food waste disposal units shall not be connected to or discharged into any grease trap.

14.14.120 Grease interceptor maintenance requirements.

A. Grease interceptors shall be maintained in efficient operating condition by periodic removal of the full content of the interceptor, which includes wastewater, accumulated FOG, floating materials, sludge and solids.

B. All grease interceptors shall be maintained in a manner consistent with the maintenance frequency approved by the Director.

C. All grease interceptors are required to have grease retention fittings as designed for proper function. Any interceptor that does not have the grease retention fittings shall be repaired and/or retro fitted with appropriate grease retention fittings.

D. No FOG that has accumulated in a grease interceptor shall be allowed to pass into any sewer lateral, public sewer, storm drain or public right of way, or onto the surface of any street or parking area.

The Director may require any FSE with a grease interceptor to submit data and information necessary to establish the required maintenance frequency of the grease interceptor.

F. The required maintenance frequency for every FSE with a grease interceptor shall be determined in one of the following methods:

1 Grease interceptors shall be fully pumped out and cleaned at a frequency such that the combined FOG and solids accumulation in the grease interceptor does not exceed twenty-five percent (25%) of the total designed hydraulic depth of the grease interceptor. This is to ensure that the minimum hydraulic retention time and required available hydraulic volume is maintained to effectively intercept and retain FOG from being discharged to the public sewer.

2. Every FSE with a grease interceptor shall fully pump out and clean its grease interceptor not less than once every six (6) months.

3. Grease interceptors shall be fully pumped out and cleaned quarterly when the frequency described in section 14.14.120(F) (1) has not been estadlished. The maintenance frequency shall be adjusted when sufficient data have been obtained to establish an average frequency based on the requirements described in section 14.14.120(F)(1) and guidelines adopted by the City pursuant to the FOG control program. The City may change the required maintenance frequency at any time to reflect changes in actual operating conditions in accordance with the FOG control program. Based on the actual generation of FOG from the FSE, the required maintenance frequency may increase or decrease.

4. The owner, operator or FOG WDP permittee of an FSE may submit a request to the Director for a change in the required maintenance frequency at any time. The FSE has the burden of responsibility to demonstrate that the requested change in frequency reflects actual operating conditions based on the average FOG accumulation over time and meets the requirements described in section 14.14.120(F)(1), and that it is in full compliance with the conditions of its FOG WDP and this chapter. Upon determination by the Director that the requested revision is justified, the FOG WDP shall be revised accordingly to reflect the change in required maintenance frequency.

5. If the grease interceptor, at any time, contains FOG and solids accumulation exceeding the requirements described in section 14.14.120(F)(1), the FSE shall be required to have the grease interceptor serviced immediately such that all FOG, and other materials are completely removed from the grease interceptor. If deemed necessary, the Director may also increase the required maintenance frequency of the grease interceptor.

G. Wastewater, accumulated FOG, floating materials, sludge/solids, and other materials removed from the grease interceptor shall be disposed of by waste haulers at an approved disposal site in accordance with all applicable federal, state, and/or local laws.

H. The Director may direct City staff to service an FSE's grease interceptor if, in the opinion of the Director, the FSE has failed to comply with the terms of the FOG WDP or with this ordinance. The FSE shall be responsible for any and all expenses of the City in undertaking such work.

14.14.130 Variance and waiver of grease interceptor or grease trap requirement.

A. Variance from grease interceptor or grease trap requirements. An FSE may request that the Director grant a variance from the grease interceptor or grease trap requirement to allow alternative pretreatment technology in lieu of a grease interceptor or grease trap, if the FSE demonstrates that the alternative equals or exceeds the effectiveness of a grease interceptor or grease trap, and that it is

impossible or impracticable to install, operate or maintain a grease interceptor or a grease trap. The Director's determination to grant a variance will be based upon, but not limited to, evaluation of the following conditions:

1. There is no adequate space for installation and/or maintenance of a grease interceptor or a grease trap.

2. There is no adequate slope for gravity flow between kitchen plumbing fixtures and the grease interceptor or the grease trap and/or between the grease interceptor or the grease trap and the private collection lines or the public sewer.

3. The FSE can prove that the alternative pretreatment technology is equally or more effective than a grease interceptor or a grease trap in controlling its FOG discharge. In addition, the FSE must be able to demonstrate, after installation of the proposed alternative pretreatment, its effectiveness to control FOG discharge through downstream visual monitoring of the public sewer, for at least three (3) months, at its own expense. A variance may be granted if the results show no visible accumulation of FOG in its lateral and/or tributary downstream sewer lines. Any variance issued pursuant to this section may be revoked at any time in the discretion of the Director.

B. Conditional waiver of requirement to install grease interceptor or grease trap. A conditional waiver of the requirement to install a grease interceptor or a grease trap may be granted for FSEs that the Director determines to have negligible FOG discharge and insignificant impact to the public sewer. Although a waiver from installation of a grease interceptor or a grease trap may be granted, the FSE may be required to provide space and plumbing segregation for future installation of a grease interceptor or a grease trap. The Director's determination to grant or revoke a conditional waiver shall be based upon, but not limited to, evaluation of the following conditions:

1. Quantity of FOG discharge as measured or indicated by the size of the FSE based on water usage, menu, seating capacity, number of meals served, amount of on-site consumption of prepared food, number of plumbing fixtures and other conditions that may reasonably be shown to contribute to FOG discharges.

2. Adequacy of implementation of BMPs and compliance history.

3. Sewer size, grade, condition based on visual and other information, FOG deposition in the sewer by the FSE, and history of maintenance and SSOs caused by FOG from the FSE.

4. Changes in operations that significantly affect FOG discharge

5. Any other condition that the Director deems reasonably related to the generation of FOG discharges.

C. Waiver of grease interceptor or grease trap installation requirement with a grease disposal mitigation fee. Where the installation of a grease interceptor or a grease trap is not feasible and no equivalent alternative pretreatment can be installed, an FSE may be granted a waiver of the grease interceptor or grease trap requirement upon the payment of a grease disposal mitigation fee as described in section 14.14.160. Additional requirements may also be imposed to mitigate the discharge of FOG into the public sewer. The Director's determination to grant the waiver upon the payment of a grease disposal mitigation fee will be based upon, but not limited to, evaluation of the following conditions:

1. There is inadequate space for installation and/or maintenance of a grease interceptor or a grease trap.

2. There is inadequate slope for gravity flow between kitchen plumbing fixtures and the grease interceptor or the grease trap and/or between the grease interceptor or grease trap and the private collection lines or the public sewer.

3. A variance from grease interceptor or grease trap installation to allow alternative pretreatment technology cannot be granted.

D. Application for variance or waiver of requirement for grease interceptor or grease trap.

An FSE may submit to the City of Lodi Wastewater Division an application for waiver or variance from the grease interceptor or grease trap requirement. The FSE bears the burden of demonstrating that the installation of a grease interceptor or a grease trap is not feasible or otherwise required. Upon determination by the Director that reasons are sufficient to justify a variance or waiver, the FOG WDP will be issued or revised to include the variance or waiver and relieve the FSE from the requirement.

E. Terms and conditions of variance or waiver.

A variance or waiver shall contain the terms and conditions that serve as the basis for its issuance. A variance or waiver may be revoked by the Director at any time upon his or her determination that any of the terms or conditions for its issuance is not satisfied or if the conditions upon which the variance or waiver was based have changed so that the justification for the variance or waiver no longer exists. The variance or waiver shall be valid so long as the FSE remains in compliance with the terms and conditions until the expiration date specified in the variance or waiver.

ARTICLE III FEES.

14.14.140 Purpose.

It is the purpose of this article to provide for the recovery of costs from users of the public sewer for the implementation of the program established in this chapter.

14.14.150 Charges and fees.

A. The city may adopt charges and fees by resolution which may include:

1. Fees for reimbursement of costs of setting up and operating the City's FOG program;

2. Fees for consistent removal by the City of pollutants otherwise subject to Federal Pretreatment Standards;

3. Other fees as the City may deem necessary to carry out the requirements contained in this chapter.

B. Costs incurred by the city as a result of required on-site sampling and analysis shall be reimbursed to the City by the owner, user or FOG DWP permittee.

14.14.160 Grease disposal mitigation fee.

Any FSE that operates without a grease control interceptor or a grease trap may be required to pay an annual grease disposal mitigation fee to equitably cover the costs of increased maintenance of the public sewer as a result of the FSE's inability to adequately remove FOG from its wastewater discharge. This section shall not be interpreted to allow new construction or an existing FSE undergoing remodeling and/or a change in operations to operate without an approved grease interceptor or a grease trap unless the Director has determined that it is impossible or impracticable to install and/or operate a grease control interceptor or a grease trap for the subject facility under the provisions of section 14.14.130 of this chapter.

A. The grease disposal mitigation fee shall be established annually by the Director, and shall be based on the estimated annual increased cost of maintaining the public sewer for inspection and removal of FOG and other viscous or solidifying agents attributable to the FSE resulting from the lack of a grease interceptor and/or a grease trap.

B. The grease disposal mitigation fee may be waived or reduced, not more frequently than annually, when the discharger demonstrates to the reasonable satisfaction of the Director that the discharger has used BMPs and waste minimization practices on a regular basis that have significantly reduced the introduction of FOG into the public sewer.

C. The grease disposal mitigation fee may not be waived or reduced when the FSE does not comply with the minimum requirements of this chapter and/or its discharge into the public sewer in the preceding twelve (12) months has caused or potentially caused or contributed, alone or collectively, sewer blockage or SSOs in the sewer downstream, or in the area surrounding the FSE, in the twelve (12) months prior to the waiver request.

ARTICLE IV. ADMINISTRATION

14.14.170 FOG WDP application

A. Any person required to obtain a FOG WDP shall complete and file with the Director, prior to commencing or continuing discharges, an application in a form prescribed by the Director. All applicable fees required by this chapter shall accompany the application. The FOG WDP application may be obtained from the City's Industrial Waste Division.

B. Applicants may be required to submit site plans, floor plans, mechanical and plumbing plans, and details to show all sewers, FOG control device, grease interceptor or other pretreatment equipment and appurtenances by size, location, and elevation for evaluation.

C. Other information related to the applicant's business operations and potential discharge may be requested to properly evaluate the FOG WDP application.

D. After evaluation of the data furnished, the FOG WDP may be issued, subject to terms and conditions set forth in this chapter and as otherwise determined by the Director to be appropriate to protect the public sewer.

14.14.180 FOG WDP application fee.

A FOG WDP application fee shall be paid by the applicant in an amount established by resolution of the City Council. Payment of the FOG WDP application fee must be received by the Director upon submission of the FOG WDP application. A permittee shall also pay any delinquent invoices in full prior to any FOG WDP renewal.

14.14.190 FOG WDP conditions.

The issuance of a FOG WDP may include, but is not limited to, any of the following conditions or limits:

A. Limits on discharge of FOG and other pollutants.

B. Requirements for proper operation and maintenance of grease interceptors and other grease control devices.

C. Grease interceptor maintenance frequency and schedule.

D. Requirements for implementation of BMPs.

E. Requirements for maintaining and reporting status of BMPs.

F. Requirements for maintaining and submitting logs and records, including waste hauling records and waste manifests including the ultimate disposition of the wastes that contain FOG.

G. Requirements to self-monitor.

H. Requirements for the FSE to construct operate and maintain, at its own expense, grease control device and sampling facilities.

I. Additional requirements as otherwise determined to be reasonably appropriate by the Director to protect the public sewer or as specified by other regulatory agencies.

J. Other terms and conditions which may be reasonably applicable to ensure compliance with this chapter.

14.14.200 FOG WDP modification of terms and conditions.

A. The terms and conditions of an issued FOG WDP may be subject to modification in the sole discretion of the Director during the life of the FOG WDP based on:

1. The permittee's current or anticipated operating data;

2. Changes in the requirements of state or federal regulatory agencies that oversee and monitor the City; or

3. A determination by the Director that such modification is appropriate to further the objectives of this chapter and all applicable regulations.

B. A permittee may request modification of the terms and conditions of an issued FOG WDP. Any request shall be in writing stating the requested change and the reasons for the change. The Director shall review the request, make a determination on the request, and respond in writing.

C. A permittee shall be informed of any change in the FOG WDP limits, conditions and/or requirements at least forty-five (45) days prior to the effective date of the change. Any changes or new conditions in the FOG WDP shall include a reasonable time schedule for compliance.

14.14.210 FOG WDP duration and renewal.

FOG WDPs shall be issued annually. At least thirty (30) days prior to the expiration of the FOG WDP, the permittee shall re-apply and pay applicable fees for the renewal of the WDP in accordance with the provision of this chapter.

14.14.220 Exemption from FOG WDP.

A. A limited food preparation establishment may not be considered an FSE and may be exempt from obtaining a FOG WDP. Exempt establishments shall be engaged only in reheating, hot holding or assembly of ready to eat food products and as a result, there may not be wastewater discharge containing significant amount of FOG.

B. An exemption from obtaining a FOG WDP may be requested in writing. If the Director determines that the reasons for the request are valid, an exemption may be granted.

C. A limited food preparation establishment may be required to follow the BMPs defined for all FSEs. A limited food preparation establishment that discharges FOG in excess of the defined limits may be reclassified as an FSE and required to obtain a FOG WDP at the Director's discretion.

14.14.230 Non-transferability of a FOG DWP.

A FOG WDP issued pursuant to this chapter is for a specific FSE, for a specific operation and creates no vested rights. No holder of a FOG WDP shall assign, transfer and/or sell the FOG WDP and/or use the FOG WDP on any premises or for any facilities, operations and/or discharges not expressly encompassed within the FOG WDP. Any FOG WDP that is transferred to a new owner and/or operator and/or to a new facility in violation of this chapter is void.

14.14.240 Facilities and drawing submittal requirements.

Upon request by the City:

A. Any FSE may be required to submit two (2) copies of facility site plans, mechanical and plumbing plans and details to show all sewer locations and connections. The submittal shall be in a form and content acceptable to the Director for review of the existing or proposed grease control device, grease interceptor, monitoring facilities, metering facilities, and operating procedures. The review of the plans and procedures shall in no way relieve the FSE of the responsibility of modifying the facilities or procedures in the future as necessary to produce an acceptable discharge, and to meet the requirements of this chapter or the requirements of any other regulatory agency.

B. The City may require the drawings be prepared by a California registered civil, chemical, mechanical, or electrical engineer.

C. All drawings shall be submitted to the Wastewater Division.

14.14.250 Monitoring and reporting conditions.

A. The Director may require periodic reporting of the status of implementation of BMPs, in accordance with the FOG control program.

B. The Director may require visual monitoring at the sole expense of the permittee to observe the actual conditions of the FSE's sewer lateral and sewer lines downstream.

C. The Director may require reports for self-monitoring of wastewater constituents and FOG characteristics of the permittee needed for determining compliance with any conditions or requirements as specified in the FOG WDP or this chapter. Monitoring reports of the analyses of wastewater constituents and FOG characteristics shall be in a manner and form approved by the Director and shall be submitted upon request of the Director. Failure by the permittee to perform any required monitoring, or to submit monitoring reports required by the Director constitutes a violation of this

chapter and shall be cause for the City to initiate all necessary tasks and analyses to determine the wastewater constituents and FOG characteristics for compliance with any conditions and requirements specified in the FOG WDP or in this chapter. The permittee shall be responsible for any and all costs and expenses of the City in undertaking such monitoring analyses and preparation of reports.

D. Other reports may be required, such as compliance schedule progress reports, FOG control monitoring reports, and any other reports deemed reasonably appropriate by the Director to ensure compliance with this chapter.

14.14.260 Recordkeeping requirements.

The permittee shall be required to keep all manifests, receipts and invoices of all cleaning, maintenance, grease removal of/from the grease control device, disposal carrier and disposal site location for no less than three years. The permittee shall, upon request, make the manifests, receipts and invoices available to the Director, any inspector and/or any enforcement officer. These records may include:

A. An on-site logbook of grease interceptor, grease trap or grease control device cleaning and maintenance practices.

B. A record of BMPs being implemented, including employee training.

C. Copies of records and manifests of waste hauling interceptor contents.

D. Records of sampling data and sludge height monitoring for FOG and solids accumulation in the grease interceptors

E. Records of any spills and/or cleaning of the sewer lateral or public sewer

F. Any other information deemed appropriate by the Director to ensure compliance with this chapter

14.14.270 Falsifying information or tampering with process.

It shall be unlawful to make any false statement, representation; record; report I plan or other document that is filed with the City and/or the Director, or to tamper with or knowingly render inoperable any grease control device, monitoring device or method or access point required under this chapter.

14.14.280 Inspections and sampling conditions.

A. The Director may inspect or order the inspection and sample the wastewater discharges of any FSE to ascertain whether the intent of these regulations is being met and the permittee is complying with all requirements. The permittee shall allow access to the FSE premises, during normal business hours, for purposes of inspecting the FSE's grease control devices or interceptor, reviewing the manifests, receipts and invoices relating to the cleaning, maintenance and inspection of the grease control devices or interceptor.

B. The Director shall have the right to place or order the placement on the FSE's property, or other locations as determined by the Director, such devices as are necessary to conduct sampling or metering operations. Where an FSE has security measures in force, the permittee shall make necessary arrangements so that the Director and/or an inspector shall be permitted to enter without delay for the purpose of performing their specific responsibilities.

C. In order for the Director to determine the wastewater characteristics of the discharger for purposes of determining compliance with FOG WDP requirements, the permittee shall make available for inspection and copying by the Director, an inspector, an enforcement officer and/or service personnel, all notices, monitoring reports, waste manifests, and records including, but not limited to, those related to wastewater generation and wastewater disposal. All such records shall be kept by the permittee a minimum of three (3) years.

14.14.290 Right of entry.

Users or permittees of premises where wastewater is created or discharged shall allow the Director, an inspector and/or an enforcement officer reasonable access to all parts of the wastewater generating and disposal facilities for the purposes of inspection and sampling during all times the FSE is open, operating, or any other reasonable time. No persons or occupants of premises shall interfere with, delay, resist or refuse entrance to the Director, an inspector and/or an enforcement officer attempting to inspect any facility involved directly or indirectly with a discharge of wastewater to the public sewer. In the event of an emergency involving an actual or imminent SSO, the Director, an inspector and/or an enforcement officer may access adjoining businesses or properties that share a public sewer with an FSE in order to prevent or remediate the actual or imminent SSO.

14.14.300 Notification of spill.

A. In the event a permittee is unable to comply with any FOG WDP condition due to a breakdown of equipment, accidents, or human error or the permittee has reasonable opportunity to know that their discharge will exceed the discharge provisions of the FOG WDP or this chapter, the user/permittee shall immediately notify the City by telephone at the number specified in the FOG WDP. If the material discharged to the public sewer has the potential to cause or result in sewer blockages or SSOs, the user/permittee shall immediately notify the City.

B. Confirmation of this notification shall be made in writing to the Director at the address specified in the FOG WDP postmarked no later than two (2) calendar days from the date of the incident. The written notification shall state the date of the incident, the reasons for the discharge or spill, what steps were taken to immediately correct the problem, and what steps are being taken to prevent the problem from recurring.

C. Such notification shall not relieve the permittee of any expense, loss, damage or other liability which may be incurred as a result of damage or loss to the City or any

other damage or loss to persons or property; nor shall such notification relieve the permittee of any fees or other liability which may be imposed by these regulations or other applicable law.

14.14.310 Notification of planned changes.

A. A permittee shall notify the Wastewater Division at least sixty (60) days prior to any facility expansion or remodeling, or process modifications that may result in new or substantially increased FOG discharges or a change in the nature of the discharge. A permittee shall notify the Wastewater Division in writing of the proposed expansion or remodeling and shall submit any information requested by the Wastewater Division for evaluation of the effect of such expansion or remodeling on the permittee's FOG discharge to the public sewer.

ARTICLE V. ENFORCEMENT

14.14.320 Harmful discharge.

A. The City may suspend the wastewater service or revoke a FOG WDP when such suspension or revocation is necessary, in the opinion of the Director, in order to stop an actual or threatened discharge which presents or may present an imminent or substantial endangerment to the health or welfare of persons, to the environment, or which causes obstruction to the collection system or the P O W , or causes the City to violate any condition of its permits.

B. Any person notified of a suspension of the wastewater treatment service and/or revocation of a FOG WDP shall immediately stop or eliminate all discharges to the public sewer. In the event of a failure of the person to comply voluntarily with the suspension order, the Director shall take such steps as he or she deems necessary, including immediate severance of the sewer connection, to prevent or minimize damage to the collection system or the P O W . The director shall reinstate the FOG WDP and/or the wastewater treatment service only upon proof of the elimination of the nonconforming discharge. A detailed written statement submitted by the user describing the causes of the harmful discharge and the measures taken to prevent any future occurrence shall be submitted to the director within fifteen (15) days of the date of occurrence.

14.14.330 Determination of non-compliance with FOG WDP conditions.

A. Sampling and inspection procedures

1. Sampling and inspection of FSEs shall be conducted in the time, place, manner, and frequency determined at the sole discretion of the Director.

2. Noncompliance with FOG WDP discharge conditions, or any discharge provisions of these regulations may be determined by an inspection of the grease control device, grease interceptor and associated manifest and documentation, or analysis of a grab or composite sample of the effluent of an FSE.

3. Any sample taken from a sample point, as determined representative by the Director, is considered representative of the discharge to the public sewer.

B. Notice of violation

Any permittee found to be in violation of the FOG WDP terms and conditions may be issued a warning notice of violation in which there will be a specified time period to correct the violation. If the violation is not corrected within the specified time period the permittee may be issued a notice of violation, with a specified time period to correct the violation. If the violation is not corrected within the time period specified the permittee shall be considered in noncompliance.

C. Noncompliance fee

Any permittee determined to be in noncompliance with the terms and conditions specified in its FOG WDP or with any provision of this chapter may be required to pay a noncompliance fee. The purpose of the noncompliance fee is to compensate the City for costs of additional inspection and follow-up, sampling, monitoring, laboratory analysis, treatment, disposal, and administrative processing incurred as a result of the noncompliance, and shall be in addition to and not in lieu of any penalties as may be assessed pursuant to section 14.14.360. Noncompliance fees shall be in the amount determined by the Director. If the permittee remains compliant for twelve (12) consecutive months following the notice of noncompliance, the fee may be waived at the discretion of the Director.

14.14.340 Compliance schedule.

A. Upon determination that a permittee is in noncompliance with the terms and conditions specified in its FOG WDP or any provision of this chapter, or needs to construct and/or acquire and install a grease control device or grease interceptor, the Director may require the permittee to enter into a compliance schedule on terms and conditions specified by the Director.

B. The compliance schedule may contain terms and conditions including but not limited to requirements for installation of a grease control device, grease interceptor and facilities, submittal of drawings or reports, audit of waste hauling records, BMPs and waste minimization practices, payment of fees, or other provisions to ensure compliance with this chapter.

C. If compliance is not achieved in accordance with the terms and conditions of a compliance schedule during its term, the Director may issue an order suspending or revoking the FOG WDP pursuant to section 14.14.350 of this chapter.

14.14.350 FOG WDP suspension and/or revocation.

A. The City may suspend and/or revoke any FOG WDP when the Director determines that a permittee:

1. Fails to comply with the terms and conditions of a compliance schedule order.

2. Knowingly provides a false statement, representation, record, report, or other document to the City and/or the Director.

3. Refuses to provide records, reports, plans, or other documents required by the City and/or the Director to determine FOG WDP terms or conditions, discharge compliance or compliance with this chapter.

4. Falsifies, tampers with or knowingly renders inaccurate any monitoring device or sample collection method.

5. Refuses reasonable access to the FSE for the purpose of inspection and monitoring.

6. Fails to make timely payment of all amounts owed to the City for user charges, FOG WDP fees or any other fees imposed pursuant to this chapter.

7. Causes obstruction, sewer blockages or SSOs in the public sewer.

8. Violates grease interceptor or grease trap maintenance requirements, any condition or limit of its FOG WDP or any provision of this chapter.

9. Fails to report significant changes in operations, or wastewater constituents and characteristics.

14.14.360 Violation-Penalty.

A. Any violation of this chapter, or the orders, rules, regulations and permits issued under this chapter, is unlawful and shall be an infraction or misdemeanor as determined by the City Attorney.

B. Any user, discharger and/or permittee in violation of this chapter, or the orders, rules, regulations and permits issued under this chapter, may be ordered by the Director to cease and desist operations until the violation is cured. Continuance of operations after notice to cease and desist has been furnished to the user and/or permittee shall be unlawful and an infraction or misderneanor as determined by the City Attorney. Each day in which any such violation shall continue shall be deemed a separate offense.

C. The violation of any of the provisions of this chapter, or the orders, rules, regulations and permits issued under this chapter, or the doing of any act prohibited or the failure or omission to do any act required by this chapter, or the orders, rules, and regulations and permits issued under this chapter, is a public nuisance and may be enjoined by the City Attorney.

D. If any violation of this chapter, or the orders, rules, regulations and permits issued under this chapter, causes darmage to the POTW, the Director may seek to recover civil damages from the user causing such damage.

E. The Director is authorized to levy against any person administrative fines of up to ten thousand dollars ($10,000.00) per day for each violation of the rules, regulations, and permits issued under this chapter. The notice shall provide information as to the reason for the administrative fine and the authority and the notice shall also specify the person's right to appeal.

1. The Director shall provide written notice of such levy to the person by certified mail. The user, discharger and/or permittee have the right to appeal the administrative action to the City of Lodi Impartial Hearing Officer by filing an appeal with the City Clerk.

2. The appeal shall be submitted within twenty (20) days of receipt of the notice and shall be accompanied by a nonrefundable fee of $75.00.

3. The user, discharger and/or permittee have the right to appeal the decision of the City of Lodi Director to the City Council. The appeal shall be submitted to the City Clerk within twenty (20) days of the decision of the Lodi and shall be accompanied by a nonrefundable fee of $75.00.

F. The remedies and provisions of this section are cumulative, and are in addition to any other remedy or provision of law.

SECTION 2. This ordinance shall be effective at the expiration of thirty (30) days from the date of adoption.

SECTION 3. The City Clerk is hereby directed to cause this ordinance to be published in full at least once within fourteen (14) days after it is adopted in a newspaper of general circulation in the City, or shall within fourteen (14) days after its adoption cause this ordinance to be posted in full in at least three (3) public places in the City and enter in the Ordinance Book a certificate stating the time and place of said publication by posting.

PASSED AND ADOPTED by the Council of the City of Lodi this Blank day of *Blank Month,* by the following vote on roll call:

AYES COUNCILMEMBERS:

NOES COUNCILMEMBERS:

ABSENT COUNCILMEMBERS:

ATTEST

City Clerk

City of Lodi Two Month Cleaning List

No	From MH	To MH	MH-MH ID	Size	Footage	Note
42	J2080	J1979	J2080-J1979	6	178	
43	K1633	L1603	K1633-L1603	8	457	
44	K1729	K1833	K1729-K1833	6	485	
45	K1759	K1862	K1759-K1862	6	340	
46	K1862	K1864	K1862-K1864	6	402	
47	K1809	K1911	K1809-K1911	6	129	(Downtown)
	K1911	K1912	K1911-K1912	6	268	(Downtown)
48	K1864	K1865	K1864-K1865	6	429	
49	K1865	K1867	K1865-K1867	6	134	
50	K2091	K2094	K2091-K2094			
51	K2134	K2135	K2134-K2135		1	
	K2135	K2137	K2135-K2137		304	
	K2137	K2139	K2137-K2139	6	307	
	K2139	K2230	K2139-K2230	6	90	
52	K2130	K2131	K2130-K2131	6	128	
	K2131	K2132	K2131-K2132	6	163	
	K2132	K2133	K2132-K2133	6	140	
	K2133	K2134	K2133-K2134	6	130	
53	K2025	K2026	K2025-K2026	6	179	
	K2026	K2038	K2026-K2038	6	311	
	K2038	K2130	K2038-K2130	6	63	
	K2[illegible]	[illegible]12	K2223-K2212	6	125	
	K2212	K2213	K2212-K2213	6	56	
54	K2213	K2202	K2213-K2202	6	153	
55	K2222	K2223	K2222-K2223	6	68	
56	K2222	K2224	K2222-K2224	6	265	
57	K2242	K2221	K2242-K2221	6	210	
	K2[illegible]	K22[illegible]		6	30	
	K2262	K2242	K2262-K2242	6	278	
58	K2262	K2262	K2262-K2262	8	258	
59	K2[illegible]					
60	L1693	M1633	L1693-M1633	6	503	Early morning run - busy street - notify
61	M1633	M1663	M1633-M1663	6	471	Early morning run - busy street - notify
62	L1991	L1911	L1991-L1911	6	187	
63	L2054	L2066	L2054-L2066	6	358	
	L2066	L2160	L2066-L2160	6	443	
64	L2130	L2134	L2130-L2134	6	613	
65	L2270	L2272	L2270-L2272	6	208	
	L2272	L2242	L2272-L2242	6	380	
66	M2190	M2180	M2190-M2180	6	102	
67	M2197	M2199	M2197-M2199	6	303	
68	M2191	M2193	M2191-M2193	6	201	
69	M2193	M2197	M2193-M2197	6	593	
70	M2098	M2190	M2098-M2190	6	309	
71	M2190	M2191	M2190-M2191	6	189	
72	M2095	M2096	M2095-M2096	6	44	
	M2096	M2098	M2096-M2098	6	433	
73	N1921	M1992	N1921-M1992	6	315	
74	M1992	M1972	M1992-M1972	6	276	
75	N1209	N1289	N1209-N1289	6	237	
76	N1394	N1374	N1394-N1374	6	271	
77	N1744	N1734	N1744-N1734	6	123	

City of Lodi Two Month Cleaning List

No	From MH	To MH	MH-MH ID	Size	Footage	Note
1	H1592	H1532	H1592-H1532	6	836	
2	I1501	H1592	I1501-H1592	8	76	
3	H1760	H1761	H1760-H1761	6	129	
	H1761	H1764	H1761-H1764	6	419	
4	I1359	I1451	I1359-I1451	6	174	
5	I1451	I1421	I1451-I1421	6	314	
6	I1511	I1501	I1511-I1501	8	232	
7	I1554	I1541	I1554-I1541	6	394	
8	I1579	I1577	I1579-I1577	6	318	
	I1577	I1566	I1577-I1566	6	241	
	I1566	I1554	I1566-I1554	6	302	
9	I1737	I1739	I1737-I1739	6	291	
10	I1739	I1851	I1739-I1851	6	282	
11	I1851	I1852	I1851-I1852	6	47	
12	I1888	I1868	I1888-I1868	6	429	
13	I1868	I1858	I1868-I1858	6	230	
14	I1858	I1838	I1858-I1838	6	318	
15	I1892	I1896	I1892-I1896	6	616	
16	I2089	I2059	I2089-I2059	8	440	
17	I2185	I2155	I2085-I2155	6	415	
18	J1578	J1569	J1578-J1569	6	160	Early morning run - busy street - notify
19	J1569	J1548	J1569-J1548	6	193	Early morning run - busy street - notify
20	J1569	J1567	J1569-J1567	6	155	Early morning run - busy street - notify
21	J1747	J1861	J1747-J1861	6	705	
22	J1757	J1769	J1757-J1769	6	529	
23	J1757	J1747	J1757-J1747	8	43	
24	J1747	J1737	J1747-J1737	6	154	
25	J1717	J1821	J1717-J1821	6	513	
26	J1797	K1705	J1797-K1705	6	324	
	K1705	K1704	K1705-K1704	6	176	
	K1704	J1793	K1704-J1793	6	261	
	J1793	J1791	J1793-J1791	6	137	
27	J1816	J1813	J1816-J1813	6	492	
28	J1890	J1894	J1890-J1894	6	576	
	J1894	K1806	J1894-K1806	6	323	
29	J1896	J1886	J1896-J1886	6	45	
	J1886	J1876	J1886-J1876	6	32	
	J1876	J1866	J1876-J1866	6	162	
30	J1903	J1901	J1903-J1901	6	220	
31	J1913	J1914	J1913-J1914	6	207	
32	J1973	J1955	J1973-J1955	6	193	
33	J1955	J1933	J1955-J1933	6	335	
34	J1933	J1913	J1933-J1913	6	264	
	J1913	J1903	J1913-J1903	6	26	
35	J1971	J1973	J1971-J1973	6	379	
36	J1973	J1974	J1973-J1974	6	207	
37	J1971	J1950	J1971-J1950	6	291	
38	J1950	J1846	J1950-J1846	6	379	
39	J1979	J1949	J1979-J1949	6	431	
40	J2080	J2041	J2080-J2041	6	525	
41	J2082	J2080	J2082-J2080	6	196	

City of Lodi Two Month Cleaning List

No	From MH	To MH	MH-MH ID	Size	Footage	Note
	N1734	N1704	N1734-N1704	6	396	
78	N1920	N1921	N1920-N1921	6	215	
79	N1921	N1923	N1921-N1923	6	172	
80	N1930	N1920	N1930-N1920	6	340	
81	N2025	N2027	N2025-N2027	6	338	
	N2027	N2121	N2027-N2121	6	382	
82	N2045	N2140	N2045-N2140	6	667	
83	N2030	N2022	N2030-N2022	6	276	
84	N2022	N2025	N2022-N2025	6	338	
85	N2040	N2045	N2040-N2045	6	626	
86	N2055	N2170	N2055-N2170	6	649	
87	N2170	N2160	N2170-N2160	6	64	
88	N2095	N2190	N2095-N2190	6	685	
89	N2140	N2144	N2140-N2144	6	667	
90	N2164	N2165	N2164-N2165	6	41	
91	N2165	N2168	N2165-N2168	6	518	
92	N2160	N2164	N2160-N2164	6	673	
93	N2190	N2195	N2190-N2195	6	685	
94	N2242	N2232	N2242-N2232	6	42	
95	N2232	N2231	N2232-N2231	6	60	
96	O1743	O1746	O1743-O1746	6	404	
97	O1746	O1756	O1746-O1756	6	49	Requires 3 man crew - pull hose
98	O1756	O1759	O1756-O1759	6	300	Requires 3 man crew - pull hose
99	O2202	N2272	O2202-N2272	8	340	
	N2272	N2242	N2272-N2242	8	371	
100	O2202	N2283	O2202-N2283	6	175	
101	P1663	P1624	P1663-P1624	6	533	
102	P1662	P1622	P1662-P1622	6	531	
103	P1660	P1662	P1660-P1662	8	245	
104	P1662	P1663	P1662-P1663	6	255	
	P1663	P1664	P1663-P1664	6	75	
105	P2199	P2290	P2199-P2290	6	149	Early morning run - Wendys
	P2290	P2291	P2290-P2291	6	99	
	P2291	P2293	P2291-P2293	6	267	
106	Q1911	Q1951	Q1911-Q1951	6	404	
	Q1951	Q1981	Q1951-Q1981	6	397	
107	R1708	R1728	R1708-R1728	6	333	
108	I1529	I1525	I1529-I1525	6	510	
109	I1525	I1534	I1525-I1534	6	140	
110	I1534	I1533	I1534-I1533	6	143	
111	I1852	I1853	I1852-I1853	6	140	
	I1853	I1856	I1853-I1856	6	482	
	K1839	K1942	K1839-K1942	8	394	From Monthly List (Downtown)
	K1842	K1945	K1842-K1945	8	482	From Monthly List (Downtown)
	I1836	I1837	I1836-I1837	6	151	Added to 2 month list from notes
	I1837	I1838	I1837-I1838	6	95	Added to 2 month list from notes
	I1838	I1839	I1838-I1839	6	21	Added to 2 month list from notes
	I1839	I1818	I1839-I1818	6	73	Added to 2 month list from notes
	I1818	I1808	I1818-I1808	6	245	Added to 2 month list from notes
	I1837	I1807	I1837-I1807	6	250	Added to 2 month list from notes
	K1280	K1260	K1280-K1260	15	258	Added to 2 month list from notes

City of Lodi Two Month Cleaning List

No	From MH	To MH	MH-MH ID	Size	Footage	Note
	K2026	K2016	K2026-K2016	4	179	Added to 2 month list from notes
	L1566	L1567	L1566-L1567	6	66	Added to 2 month list from notes
	L1567	L1568	L1567-L1568	6	175	Added to 2 month list from notes
	L1539	L1548	L1539-L1548	6	125	Added to 2 month list from notes
	L1548	L1558	L1548-L1558	6	156	Added to 2 month list from notes
	L1558	L1557	L1558-L1557	6	165	Added to 2 month list from notes
	L1557	L1556	L1557-L1556	6	150	Added to 2 month list from notes
	L1556	L1567	L1556-L1567	6	176	Added to 2 month list from notes
					45,763	
Footnotes						
	Number of reaches added is 50 bringgin the total to161					

APPENDIX H

System Evaluation and Capacity Assurance Plan Documents

Appendix H includes the following:

H-1 Technical Memorandum-SSMP Audit System Evaluation and Capacity Assurance Plan

H-2 Technical Memorandum-Trunk Sewer Hydraulic Analysis

H-4 Wastewater Condition Assessment Date – Power point Presentation

H-5 Capital Improvement Plan (CIP) Lodi Wastewater Collection System Condition Assessment

H-6 2009 Wastewater Capacity Study

CITY OF LODI

2009 Wastewater Capacity Study

June 2009

TABLE OF CONTENTS

LIST OF TABLES **1**
LIST OF FIGURES **1**
EXECUTIVE SUMMARY **2**
EXECUTIVE SUMMARY **2**
CHAPTER 1 INTRODUCTION **3**
1.1 Background and Study Objective 3
1.2 Study Area 3
1.3 Existing Sewer System 3
1.4 Report Organization 4
CHAPTER 2 DRY WEATHER FLOW **5**
2.1 Data Sources 5
2.2 Existing Dry Weather Flow 5
CHAPTER 3 WASTEWATER MODEL BUILDING AND CALIBRATION **7**
3.1 Model Software 7
3.2 Building the Model 7
3.3 Flow Generation 7
3.4 Flow Monitoring Study 8
3.5 Flow Pattern Generation 8
3.6 Model Calibration 9
3.7 Wet Weather Flow Setup 10
CHAPTER 4 CAPACITY ANALYSIS **15**
4.1 Dry Weather Flow Analysis 15
4.2 Wet Weather Flow Analysis 15
CHAPTER 5 RECOMMENDED MAINTENANCES AND CAPITAL IMPROVEMENT PROGRAMS **21**
5.1 Recommendations 21
5.2 Conclusion 22

LIST OF TABLES

Table 2-1 Unit Flow 5
Table 3-2 Flow Meter Location 8
Table 3-3 Unit Flow Adjustment 10
Table 3-4 Peaking Factors 10
Table 5-1 Wastewater Pipe Monitoring Location 21
Table 5-2 Capital Improvement Projects 21
Table 5-3 Future Flow Monitoring Locations 22

LIST OF FIGURES

Figure 3-4 City of Lodi Diurnal Curves 9
Figure 3-1 Existing Wastewater Pipe System 12
Figure 3-2 Tributary Area Map 13
Figure 3-3 Wastewater Flow Monitoring Location 14
Figure 4-1 Existing Dry Weather Capacity 16
Figure 4-2 COL (2 Yr) Wet Weather Capacity 17
Figure 4-3 5 Yr Storm Wet Weather Capacity 18
Figure 4-4 10 Yr Storm Wet Weather Capacity 19
Figure 4-5 Wet Weather HGL Profile – Washington Street 20
Figure 5-1 Dry Weather Peak Velocity Appendix A Model results vs Measured Values at Flow Monitoring Locations 23
Appendix A Model results vs Measured Values at Flow Monitoring Locations 24

Executive Summary

The purpose of this wastewater capacity study is to investigate the dry weather and wet weather flow capacities of the City's wastewater pipe system in accordance with State Water Resources Control Board Statewide General Waste Discharge Requirements Order No. 2006-0003. Data for existing wastewater mains having diameters of 8-inches or larger was used to develop a wastewater model to simulate various flow scenarios. In addition, a city-wide flow monitoring study was conducted to provide the necessary flow data to calibrate the wastewater model under both dry weather and wet weather conditions.

The model results indicate that the City's wastewater mains can accommodate dry weather peak flow conditions without surcharging. For wet weather conditions, the model has identified several locations throughout the City that experience surcharge conditions during peak flow, but in no case did the model predicted a wastewater overflow condition (hydraulic grade line elevation higher than structures).

In order to provide greater wet weather over flow protection and increase the distance between the ground surface and hydraulic grade line, upsizing of several wastewater mains is recommended. A list of the recommended capital improvement projects is shown below and also in **Table 5-2.** The total cost of the improvements is estimated to be $1,050,000.

Wastewater Main	**From**	**To**	**Description**	**Footage**	**cost**
Hutchins Street	Sycamore	Kettleman	Increase from 18" to 21"	1,292	$250,000
Stockton Street	Vine	Kettleman	Increase from 18" to 21"	2,560	$500,000
Lodi Avenue	Sacramento	Hutchins	Increase from 12" to 15"	1,857	$300,000
				Total Cost	**$1,050,000**

The model does not include wastewater mains smaller than 8 inches. Since the majority of the City's wastewater mains are 6-inch pipe, the wastewater model should be expanded in the future to include the 6-inch wastewater mains. Expansion of the model will allow development of a more comprehensive capital improvement project program.

The modeling exercise also revealed the need to adopt a design storm (5-year or 10-year storm event) for designing wastewater pipes for wet weather peak flow conditions. Staff is currently working on identifying the most appropriate design storm for the City of Lodi.

Chapter 1 Introduction

1.1 Background and Study Objective

The State Water Resource Control Board (SWRCB) adopted the Statewide General Waste Discharge Requirement Order No. 2006-0003 (Order) in May 2006. The Order requires that all public wastewater collection systems comprised of more than one mile of pipeline be regulated and that each operator of a publicly-owned collection system develop and implement a Sewer System Management Plan (SSMP).

The SSMP is to be comprised of eleven elements including but not limited to:

- Collection System Management Goals
- Organization of Personnel
- Legal Authority for Permitting Flows to the System
- Operation and Maintenance Activities
- Design and Performance Provisions
- Overflow Emergency Response Plans
- Fats, Oils and Grease Program
- System Capacity Assurance Plan
- System Monitoring and Measurement Plan
- Internal SSMP Audits
- SSMP Public Communications Program.

This report will focus on the System Capacity Assurance Plan (SCAP). The SCAP will include a capital improvement plan (CIP) to provide the hydraulic capacity for key sanitary sewer system elements for dry weather peak flow and the appropriate design storm (wet weather) event for wet weather peak flow. The plan will include four elements: System Evaluation, Design Criteria, Capacity Enhancement Measures, and CIP Schedule.

1.2 Study Area

The study area for this report is the area within the current 2009 City of Lodi city limits as shown on Figure 3-1. The study area covers approximately 11 square miles.

1.3 Existing Sewer System

The City's existing wastewater system includes a gravity pipe system and seven wastewater pump station systems. The majority of the City is served by the gravity system (5,670 acres or 8.2 square miles). The collection system is composed of 181 miles of pipe ranging from 4-inches to 42-inches in diameter. The pipelines discharge into a recently rehabilitated 48-inch sewer outfall line which flows southwest to the City's White Slough Water Pollution Control Facility located approximately 6 miles west of town. The existing wastewater collection system is shown in **Figure 3-1**.

The wastewater pipelines are constructed primarily of clay, concrete, and PVC pipe materials. The wastewater pipes in the central, eastern and downtown area of the City are the oldest (over 80 years of age) and are primarily clay pipe with concrete joints. The City has initiated a Wastewater Pipe Replacement Program to rehabilitate the wastewater pipes in these areas. The program includes lining the old wastewater pipes

with a plastic liner to seal cracks in the pipes and pipe joints and to enhance system efficiency.

The existing 48-inch outfall trunk line was originally constructed of concrete material and was recently (2008) lined with a dual wall PVC slip-line pipe material. Although the liner has effectively reduced the outfall trunk line diameter from 48-inches to 42-inches, the reduction in the interior roughness of the outfall pipeline is expected to offset the slight decrease in the pipe diameter.

1.4 Report Organization

This report is organized as follows:

- Chapter 1, Introduction
- Chapter 2, Dry Weather Flow Conditions
- Chapter 3, Wastewater Model Building and Calibration
- Chapter 4, Capacity Analysis – Dry Weather and Wet Weather
- Chapter 5, Recommended Maintenance and Capital Improvement Programs
- Appendix A, Model results vs Measured Values at Flow Monitoring Locations

Special thanks to Mr. Glenn Hermanson of RMC Water and Environment consultant for providing assistance to initiate this study and for providing sample data and reports from other cities to aid in drafting this report.

Chapter 2 Dry Weather Flow

This chapter describes the methodology used to establish the existing dry weather wastewater flows in the City's wastewater collection system which serves as the basis of the wastewater system capacity analysis for normal peak flow. The wet weather flow analysis is presented in Chapter 4 of this report.

2.1 Data Sources

Wastewater generation analysis was based on the design criteria presented in Section 2 of the current City of Lodi Public Improvement Design Standards (Design Standards). In addition, the following wastewater monitoring flow studies were used to compare the actual flow with the calculated results:

City of Lodi Flow Monitoring Services, March 2002, by E2 Consulting Engineer

Sanitary Sewer Flow Monitoring and Inflow/infiltration Study, March 2009, by V&A

The City's existing wastewater system map was used to set up the wastewater model and existing parcel maps were used to define the wastewater flow sub-basin boundaries and acreages.

2.2 *Existing Dry* Weather *Flow*

Wastewater flow for residential and non-residential land uses were first estimated using the Design Standards and **Table 2-1:**

Table 2-1 Unit Flow

Designation	Land Use	Unit/Acre	Population/ Unit	Average Flow (gpd/Acre)
C	Commercial			2500
IND	Industrial			2000
HDR	High Density Residential	22	2.0	4400
MDR	Medium Density Residential	12	2.6	2700
LDR	Low Density Residential	6.5	3.0	1780
School	School			22 gpd/att

The dry weather flow was estimated by defining sub-basins along the major trunk lines (8-inch or larger) and calculating acreages for each land use based on existing parcel maps. The flow was then calculated based on the land uses and unit flow criteria in **Table 2-1** above and assigned to the nearest downstream node in the wastewater model.

To calculate flows generated by low and medium residential development, the parcel acreage associated with those land uses in each sub-basin was determined and the appropriate units per acre and flow criteria applied. Flows generated by high density residential developments were calculated by determining the number of units, using aerial photographs to actually count the number of units or by estimating the number of

units based on the units per acre criteria in **Table 2-1,** and then applying the appropriate flow criteria.

The population density in the residential area east of the Union Pacific Railroad (UPRR), north of Kettleman Lane, and south of Lockeford Street, is generally higher per household (lot) than the City's standard. A separate land use category (Eastside Residential) was created to provide a more accurate estimate of the wastewater flow generation from this area. The population density for the Eastside Residential category was assumed to be 4 persons per unit.

For school sites, the actual number of students attending each school was acquired from the Lodi Unified School District and used to calculate the wastewater flow from each school site.

For commercial and industrial sites, the parcel acreages and flow criteria from **Table 2-1** were used to calculate the wastewater flow during dry weather conditions.

Wastewater flow from industrial developments was divided into two categories: the standard industrial use shown in **Table 2-1** (2,000 gpd/acre) and an industrial warehouse use which was assigned an average flow rate of 90 gpd/acre. The standard industrial category represents manufacturing uses that require large quantities of process water (i.e. General Mills and the Pacific Coast Producers cannery). The industrial warehouse category includes uses such as auto repair, machine shops and storage warehouses. The majority of the industrial land use east of Highway 99 is represented by warehouse uses.

Chapter 3 Wastewater Model Creation and Calibration

This chapter presents the methodology used to create the City's wastewater model and to calibrate the model using the collected field data. This chapter also presents the peak design criteria used in the model.

3.1 Model Software

The City selected Bentley's SewerCAD V8i modeling software for the wastewater model. Since the City has been using Bentley's WaterCAD and StormCAD software for modeling the City's water and storm drainage systems, it seemed reasonable to use wastewater modeling software from the same company for consistency.

SewerCAD contains a graphical/GIS interface and has the ability to model dry/wet weather flows in extended period simulations along with other useful tools for wastewater system modeling. The software has the ability to import GIS layers and output files to AutoCAD.

3.2 Building the Model

The City's wastewater system map was imported as a background for the base model. Only pipes 8-inch or larger were modeled. As-built drawings were used to determine the invert elevations for the pipes and manholes as well as ground elevations. For those locations where as-built drawings were not available, invert elevations were determined by field surveys.

There are seven (7) existing public wastewater pump stations in the City as shown on **Figure 3-1.** They are the Woodlake, Evergreen, Rivergate, Mokelumne, Cluff, Tienda, and Harney Lane wastewater pump stations. Data for the pump stations and pump curves were obtained from the design/as-built drawings for the pump stations.

Overall the model consists of 284 pipe segments and 276 manholes **(Figure 3-1)**.

There are many "overflow" connections (diversion nodes) incorporated into the City's wastewater trunk lines. These are junctions in the wastewater system that have two out-flowing pipes. SewerCAD has a feature called "diversion flow" which simulates this condition by assigning a portion of the flow to the additional out-flowing pipe based on a predefined curve input by the user.

The outfall in the model is located at manhole U0439 on the 48-inch outfall pipeline as shown on **Figure 3-1.** As previously mentioned, the 48-inch outfall pipeline was lined with a PVC liner in 2008. Although the effective inside diameter was reduced from 48 inches to 42 inches, the roughness coefficient factor was also reduced due to the smoother inside pipe wall. The outfall pipe line was modeled as a 42-inch pipe with an "n" factor of 0.010.

3.3 Flow Generation

Once the physical elements were incorporated into the model, the study area was divided into five (5) wastewater tributary areas **(Figure 3-2).** Each tributary area was further subdivided into many sub-basins. The wastewater flow from each sub-basin was calculated and assigned to the nearest downstream manhole.

Only dry weather flows were assigned to the manholes. The wet weather flows were applied as peaking factors in the model to simulate the inflow during wet weather scenarios.

3.4 Flow Monitoring Study

The City retained V&A Consultants Engineers to perform a flow monitoring study on the City's wastewater system. The study period was December 2008 though January 2009. The purpose of the study was to collect dry weather and wet weather flow data through the use of flow meters and one rain gauge which were installed throughout the City. The flow meter and rain gauge locations are shown on **Figure 3-3.** The flow meter locations are also listed in **Table 3-2** below.

Table 3-2 Flow Meter Location

Location	Manhole Number	Note
Site A21	R1109	Measured the flow from Tributary Area A north of Kettleman Lane.
Site A42	R1109	Measured the combined flow from the all the Tributary Areas at the Century Blvd. trunk line.
Site B	R1594	Measured flow from Tributary Area B north of Century Blvd.
Site C	R1759	Measured flow from Tributary Area C north of Century Blvd.
Site D	R1989	Measured flow from Tributary Area D north of Century Blvd.
Site E	R2380	Measured flow from Tributary Area E, which is entirely developed with industrial land uses.
Site F	J2420	Measured flow generation from the Cluff Avenue Pump Station which collects flow from industrial development.
Evergreen PS	n/a	Measured the flow generation from the Evergreen Pump Station Area which collects flow from residential development.

A copy of the flow monitoring study is on file.

The 2003 Flow Monitoring Study performed by E2 Consulting Engineers was used to determine the wastewater flow from the east side residential area in the vicinity of Vine Street and Central Avenue.

3.5 Flow Pattern Generation

Flow patterns (diurnal curves) for the residential and industrial developments were developed based on the wastewater flow monitoring studies. The diurnal curve for commercial development is based on a typical commercial development curve provided by RMC Water and Environment consultants. The resulting curves are shown in **Figure 3-4.**

Figure 3-4 City of Lodi Diurnal Curves

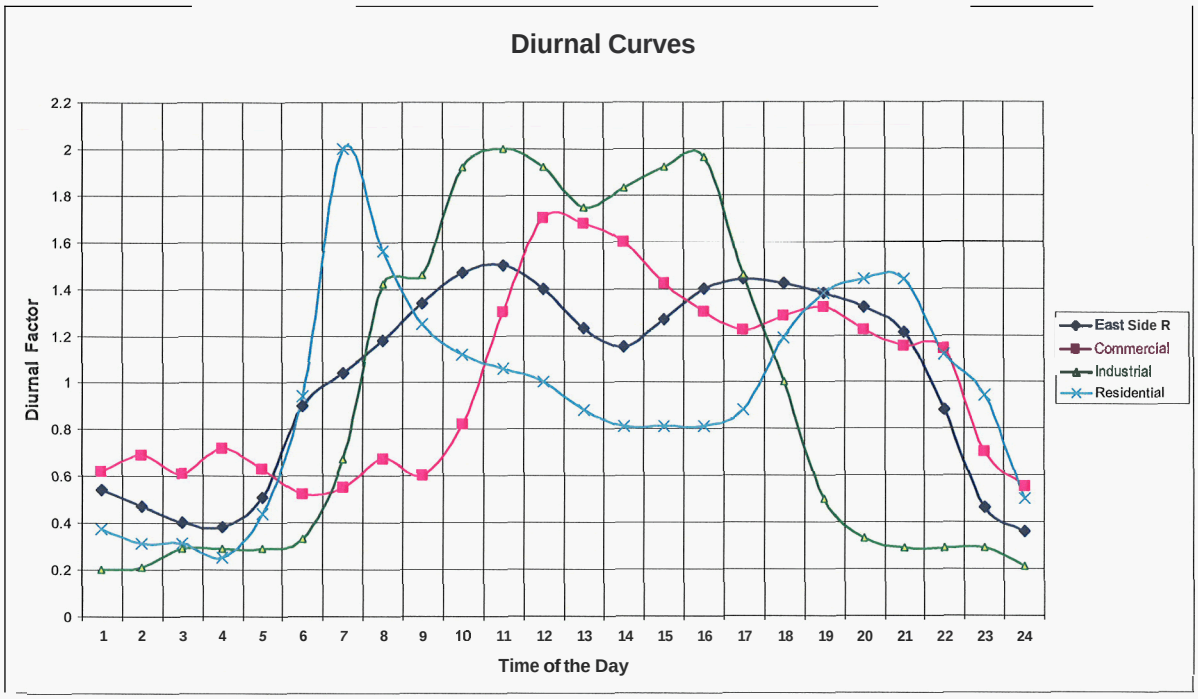

3.6 Model Calibration

After verifying the accuracy of the model data, an extended period simulation (EPS) for a 72-hour period scenario for dry weather flow was run. The results of the EPS were compared to the actual measured results from the flow monitoring studies. The calculated flows from the initial run of the EPS were generally higher than the measured flows. The unit flows for residential, commercial and industrial developments were then adjusted until the model results and flow monitoring date were closely matched.

Based on the flow monitoring study, the industrial area served by the Cluff Avenue Pump Station only has a unit flow of about 90 gpd/acre versus the City's standard of 2,000 gpd/acre for general industrial use. The lower measured unit flow results from the pattern of development in the lift station service area which consists primarily of warehouses and small machine shops. A separate unit flow category (Industrial Warehouse) was created to more accurately model the flow from the lift station.

For residential areas, the flow monitoring study indicated that the average per capita flow for the residential developments served by the Evergreen Pump Station was approximately 65 gpd as opposed to the City's standard of 100 gpd. The results for the East Side Residential area conformed to the City's standard per capita flow rate of 100 gpd.

The resulting flow generation adjustments are listed in the **Table 3-3.**

Table 3-3 Unit Flow Adjustment

Development/Use	Standard Flow	Adjusted Flow
Commercial	2500 gpd/acre	2016 gpd/acre
Industrial	2000 gpd/acre	1440 gpd/acre
Industrial Warehouse	n/a	90 gpd/acre
Residential	100 gpd/person	65 gpd/person
East Side Residential	n/a	100 gpd/person

After the flow generation adjustments were made, the model was run again for comparison with the flow monitoring study data. Based on these results, additional adjustments to the diversion nodes (nodes that have two out-flowing pipes) were made to balance the flow to the different trunk lines in each tributary area.

The results from the final calibrated model were plotted against the measured values at each flow monitoring station **(Appendix A).** Overall the results from the calibrated model corresponded to the data measured in the field. There were, however, two locations (Sites C and E) where the results from the calibrated model were somewhat different that the monitoring study data. These discrepancies could be caused by the number of diversion points in the upstream pipes. In our opinion, further calibration of these nodes would require significant effort and would not result in significant improvements in the model accuracy.

3.9 Wet Weather *Now* Setup

The standard peaking factors listed in Section 2.200 of the City of Lodi Public Improvement Design Standards include an allowance for an infiltration/inflow (I/I) condition. The design storm on which these peaking factors were based is unknown, however, using the City's standard peaking factors in the calibrated model yielded results corresponding to a 2-year design storm. Although there are no universal standards for which design storm (2, 5 or 10-year) should be used for wastewater collection system design, it is common for local agencies in a semi-arid climate similar to Lodi to adopt a 5- or 1O-year storm event. The peaking factors for the 2-, 5- and 1O-year storm events are listed below in **Table 3-4.**

Table 3-4 Peaking Factors

Development	2-year Storm	5-year Storm	10-year Storm
Commercial	3	3.2	3.5
Industrial	2	2.8	3.0
Industrial Warehouse	n/a	8.0**	11**
Residential *	1.0	1.1	1.2

There is no peaking factor in the Design Standards for the Industrial Warehouse development category. Due to the low average flow generated by this type of development, a higher peaking factor is needed to account for the inflow as shown in **Table 3-4.** The City should re-examine this peaking factor for Industrial Warehouse development to reflect the wet weather flow conditions.

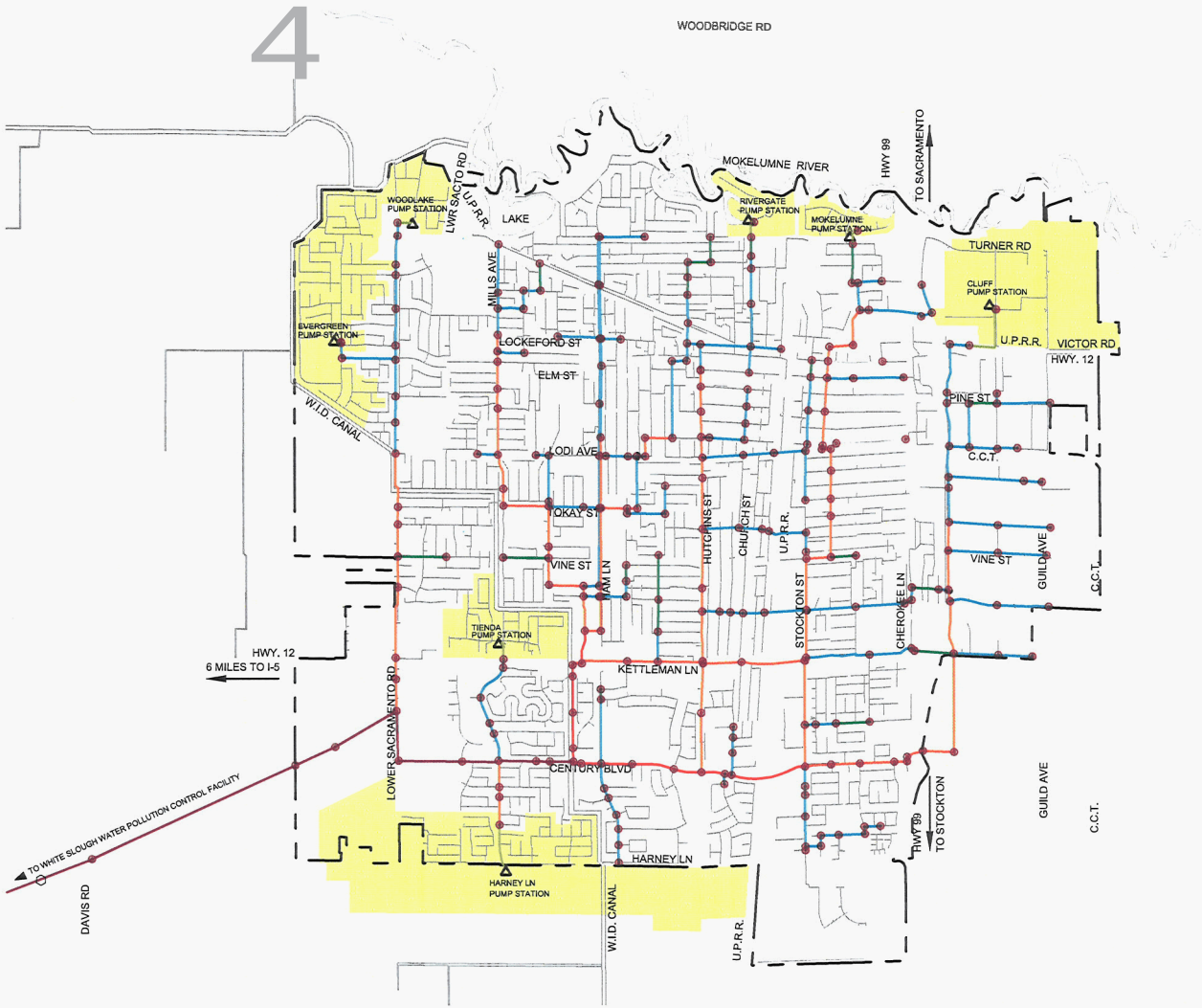

1" = 3000'

FIGURE **3-1**

EXISTING WASTEWATER PIPE SYSTEM

PIPE DIAMETER / TYPE

- 6" OR SMALLER
- 8"
- 10" TO 15"
- 18" TO 24"
- 30" TO 36"
- 42" TO 48"
- FORCE MAIN
- CITY BOUNDARY
- MANHOLE
- PUMP STATION
- MODELOUTFALL
- PUMP STATION BOUNDARY

K:\DESIGN\Projects\Wastewater Capacity Study\Draft Report\Capacity Exhibits.dwg, **PIPE SYSTEM, 06/01/2009** 10:23:06 *AM*, ichang

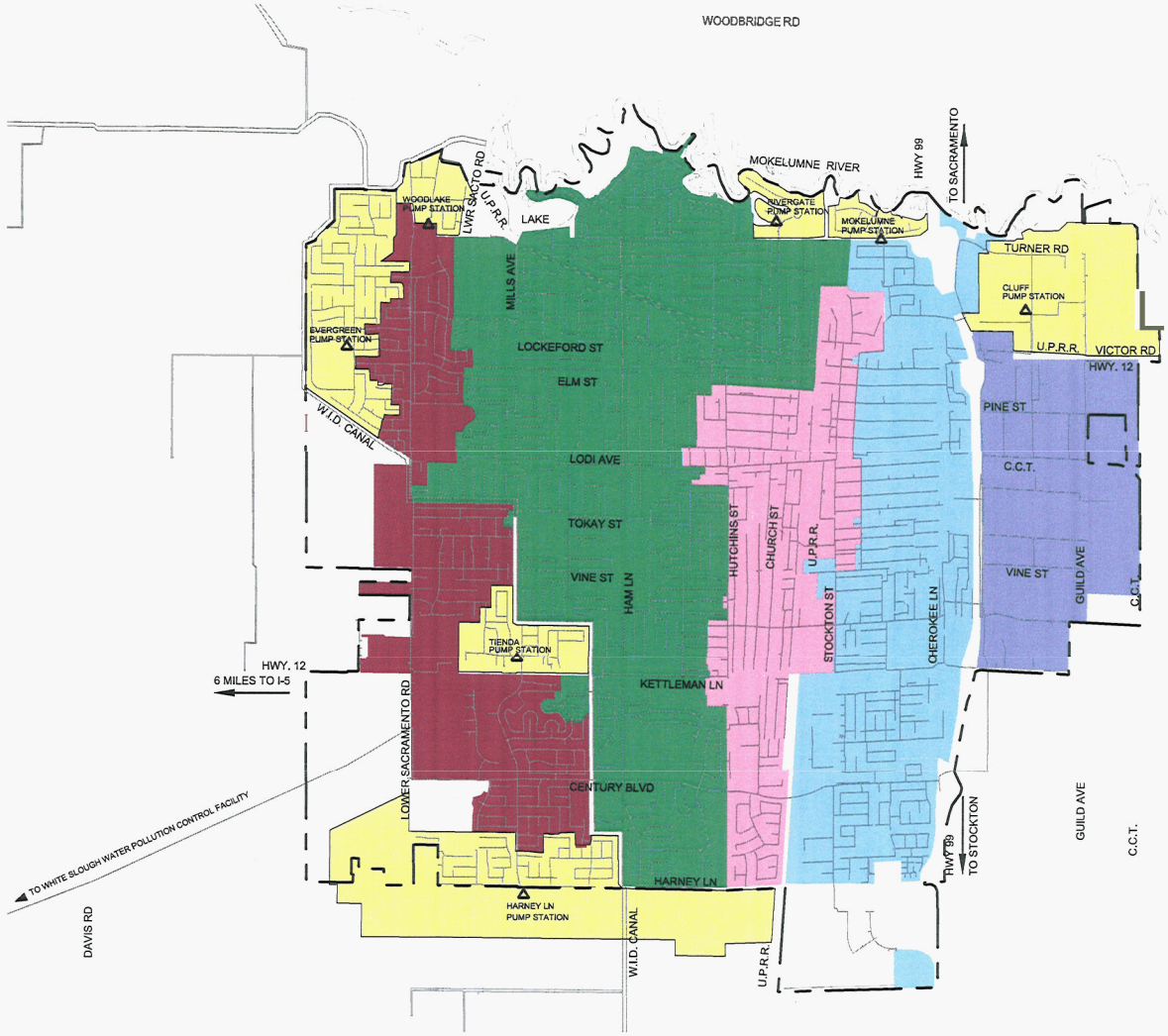

1" = 3000'

FIGURE **3-2**

TRIBUTARY AREA MAP

- TRIBUTARY AREA A (788 Ac)
- TRIBUTARY AREA B (2,232 Ac)
- TRIBUTARY AREA C (820 Ac)
- TRIBUTARY AREA D (1,196 Ac)
- TRIBUTARY AREA E (660 Ac)
- PUMP STATION BOUNDARY
- SEWER PIPE
- CITY BOUNDARY
- PUMP STATION

K:\DESIGN\Projects\Wastewater Capacity Study\Draft Report\Capacity Exhibits.dwg, TRIB MAP, 06/01/2009 10:22:31 AM, lchang

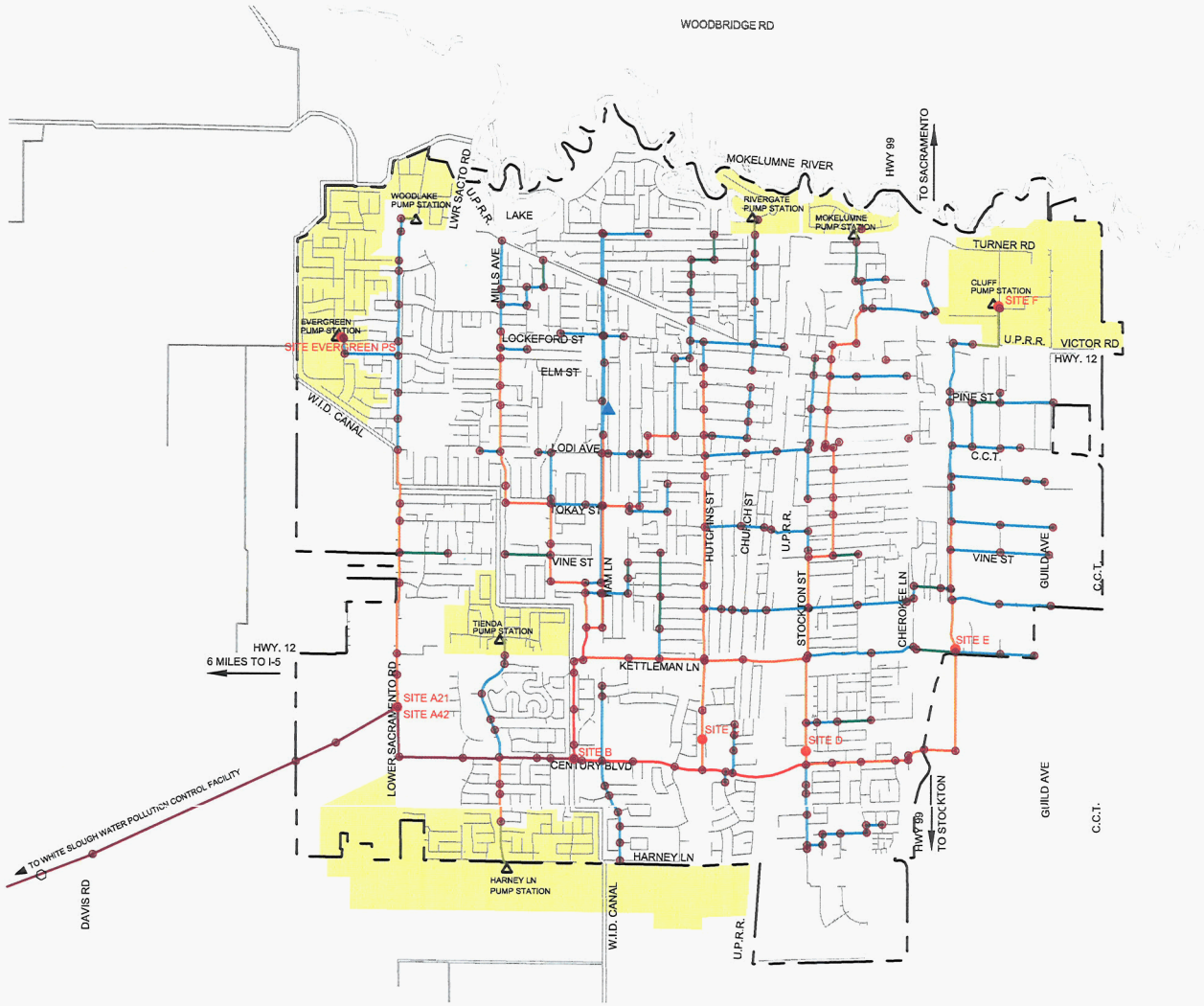

1" = 3000'

FIGURE 3-3

WASTERWATER FLOW MONITORING LOCATIONS

PIPE DIAMETER

- 6"
- 8"
- 10" TO 15"
- 18" TO 24"
- 30" TO 36"
- 42" = 48"
- FORCE MAIN
- C I N BOUNDARY
- PUMP STATION
- PUMP STATION BOUNDARY
- FLOW METER LOCATION
- RAIN GAUGE LOCATION

K:\DESIGN\Projects\Wastewater Capacity Study\Draft Report\Capacity Exhibits.dwg, MON LOC. 06/01/2009 10:21:55 AM, lchang

Chapter 4 Capacity Analysis

This chapter presents the wastewater model results.

4.1 Dry Weather Flow Analysis

The calibrated model was run for existing dry weather flow conditions (2008) using the EPS 72-hours simulation method to identify any deficiencies in the existing wastewater mains.

Under the dry weather peak flow condition (generally occurring about 8:00 pm), the model results indicate that the majority of the pipes have a depth to diameter ratio (d/D) of 50% or less. A few pipes were identified that experience a d/D of more than 50% but less than 75%. No surcharged pipes were identified in the system for the dry weather peak flow condition **(Figure 4-1).**

4.2 Wet Weather Flow Analysis

Steady state analysis was used to calculate the peak wet weather flow in the City's wastewater system and identify any deficiencies in the existing wastewater mains under the peak wet weather flow conditions.

Three storm events (2-, 5-, and 10-yr) were simulated in the model. The model results indicate that the majority of the wastewater mains in the City have a d/D of 75% or less for all three storm events **(Figure 4-2** through **Figure 4-4).** A few pipes were identified that experience a d/D of more than 75% but less than 99%. Some pipes were identified that experience surcharge conditions. Those pipes are shown in red on the above referenced figures and are mainly located along Lower Sacramento Road north of the Woodbridge Irrigation District (WID) canal, Ham Lane north of Lodi Avenue, Hutchins Street from Ribier Avenue to Lodi Avenue, and Washington Street from Vine Street to Lockeford Street.

Based on the model results, the pipeline along Washington Street experiences the most severe surcharge conditions. The profile of this pipeline is shown on **Figure 4-5.** The surcharge condition for this pipeline under the 2-year and 5-year storms is marginally acceptable, indicating approximately 2 feet of ground cover in the worst location. For the 10-year storm scenario, the hydraulic grade line elevation is about 1 foot below the lowest manhole rim elevation. This section of the pipeline includes about eight (8) overflow connections (diversion nodes) to the parallel wastewater main in Stockton Street. The presence of the diversion nodes may relieve this section of pipeline from sewer overflow conditions. Additional flow monitoring will be required to provide a more detailed analysis of this pipeline because of the diversion nodes.

Overall, the model indicates that there are no locations that experience sewer overflow conditions during the 5-year and 10-year storm events, but there are some locations in the wastewater system that experience surcharge conditions during these design storms.

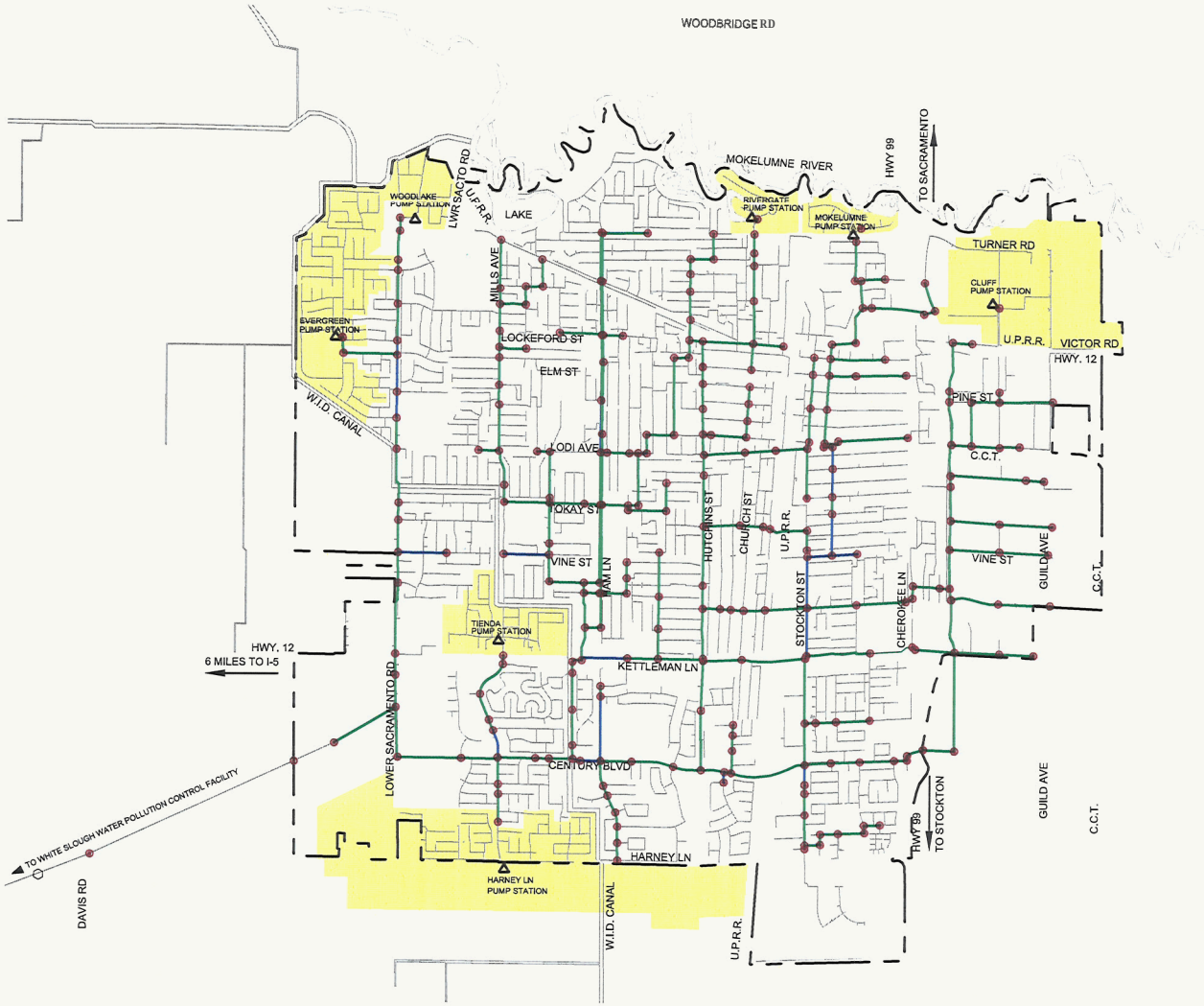

1" = 3000'

FIGURE 4-1

EXISTING DRY WEATHER CAPACITY

FLOW DEPTH RATIO d/D %

- < 50
- 50-75
- 75-99
- SURCHARGE
- UNMODELED SEWERS
- CITY BOUNDARY
- PUMP STATION
- PUMP STATION BOUNDARY

K:\DESIGN\Projects\Wastewater Capacity Study\Draft Report\Capacity Exhibits.dwg, DRY WEATHER FLOW, 06/01/2009 10:21:26 *AM*, lchang

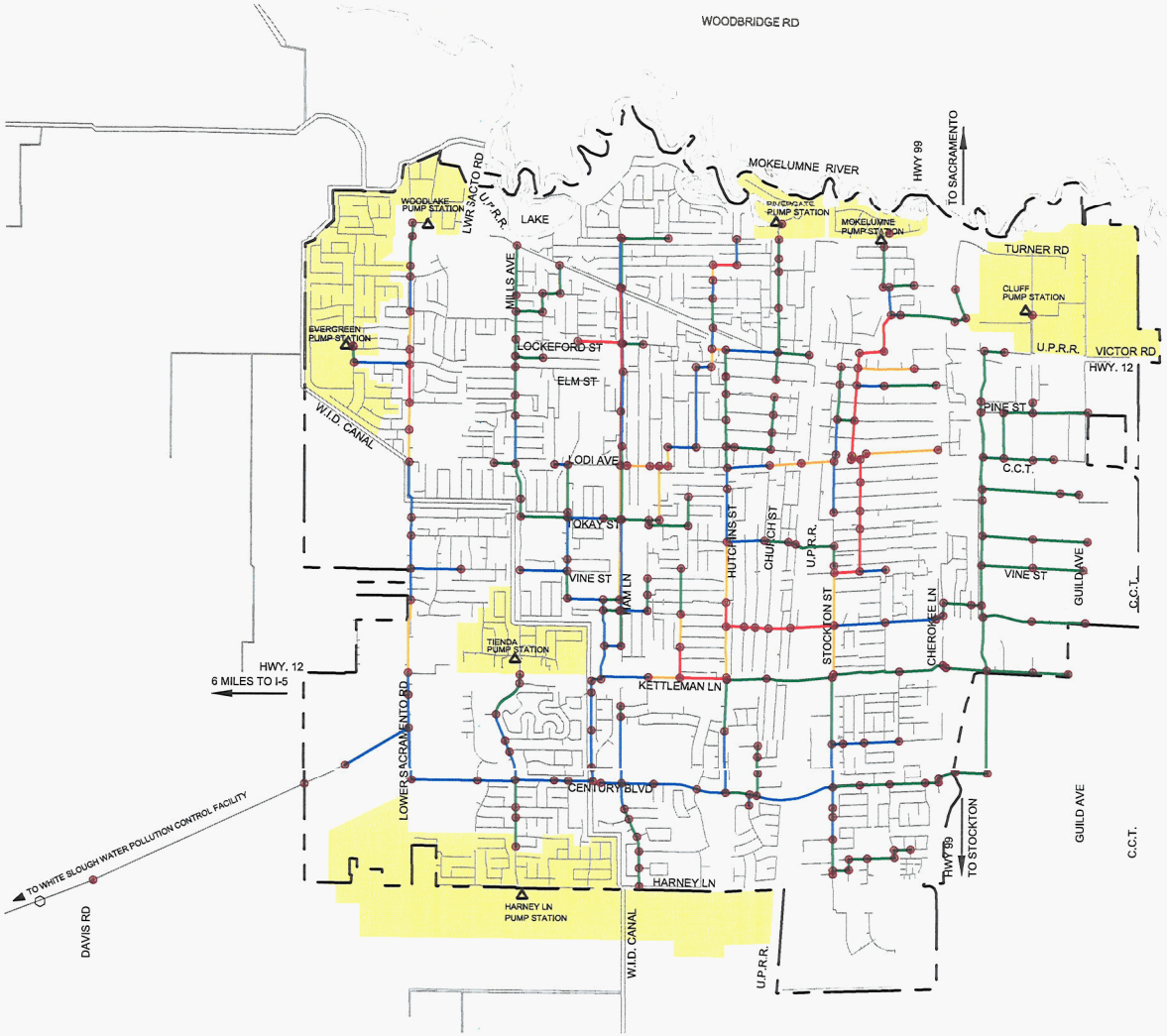

1" = 3000'

FIGURE 4-2

2 YR STORM WET WEATHER CAPACITY

FLOW DEPTH RATIO d/D %

- < 50
- 50-75
- 75 -99
- SURCHARGE
- UNMODELED SEWERS
- CITY BOUNDARY
- PUMP STATION
- PUMP STATION BOUNDARY

K:\DESIGN\Projects\Wastewater Capacity Study\Draft Report\Capacity Exhibits.dwg, WET 2YR, 06/01/2009 10:20:46 AM, lchang

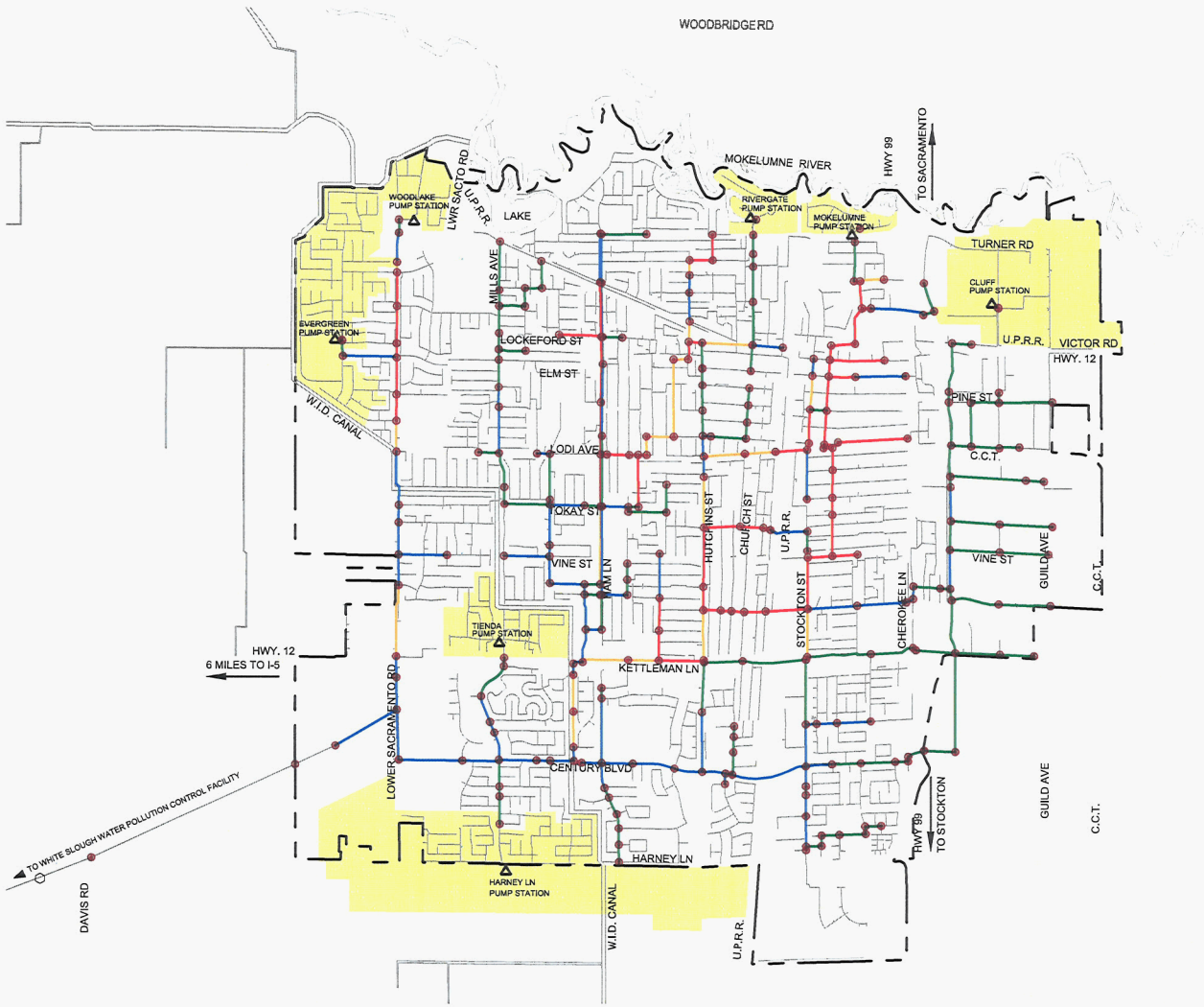

1" = 3000'

FIGURE **4-3**

5 YR STORM WET WEATHER CAPACITY

FLOW DEPTH RATIO d/D %

- < 50
- 50 - 75
- 75 - 99
- SURCHARGE
- UNMODELED SEWERS
- CITY BOUNDARY
- PUMP STATION
- PUMP STATION BOUNDARY

K:\DESIGN\Projects\Wastewater Capacity Study\Draft Report\Capacity Exhibits.dwg, WET 5YR, 06/01/2009 10:19:42 AM, lchang

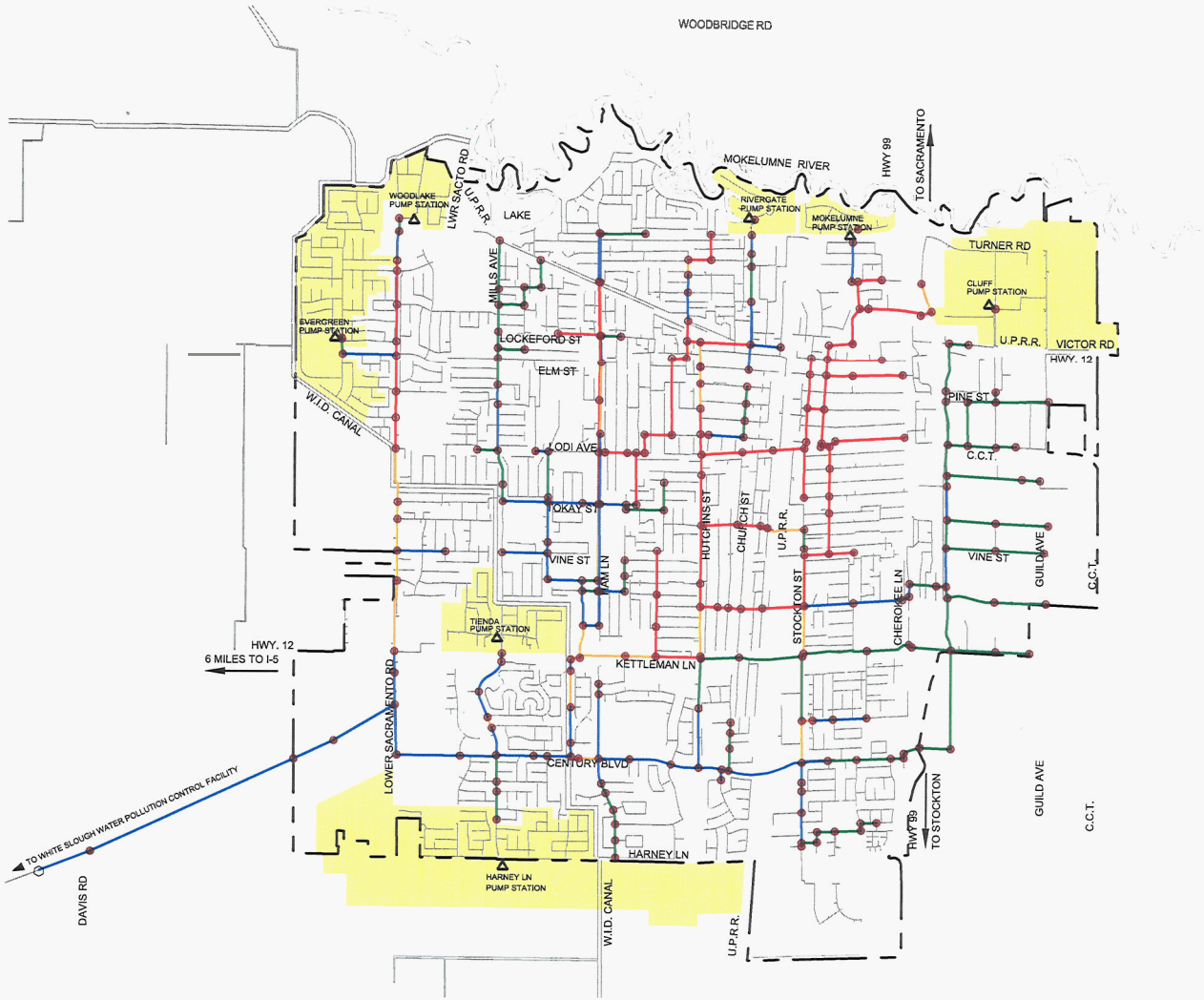

1" = 3000'

FIGURE 4-4

10 YR STORM WET WEATHER CAPACITY

FLOW DEPTH RATIO d/D %

- < 50
- 50-75
- 75-99
- SURCHARGE
- UNMODELED SEWERS
- CITY BOUNDARY
- PUMP STATION
- PUMP STATION BOUNDARY

K:\DESIGN\Projects\Wastewater Capacity Study\Draft Report\Capacity Exhibits.dwg, WET 10YR, 06/01/2009 10:19:07 AM, lchang

FIGURE **4-5**

WET WEATHER HGL PROFILE

WASHINGTON STREET

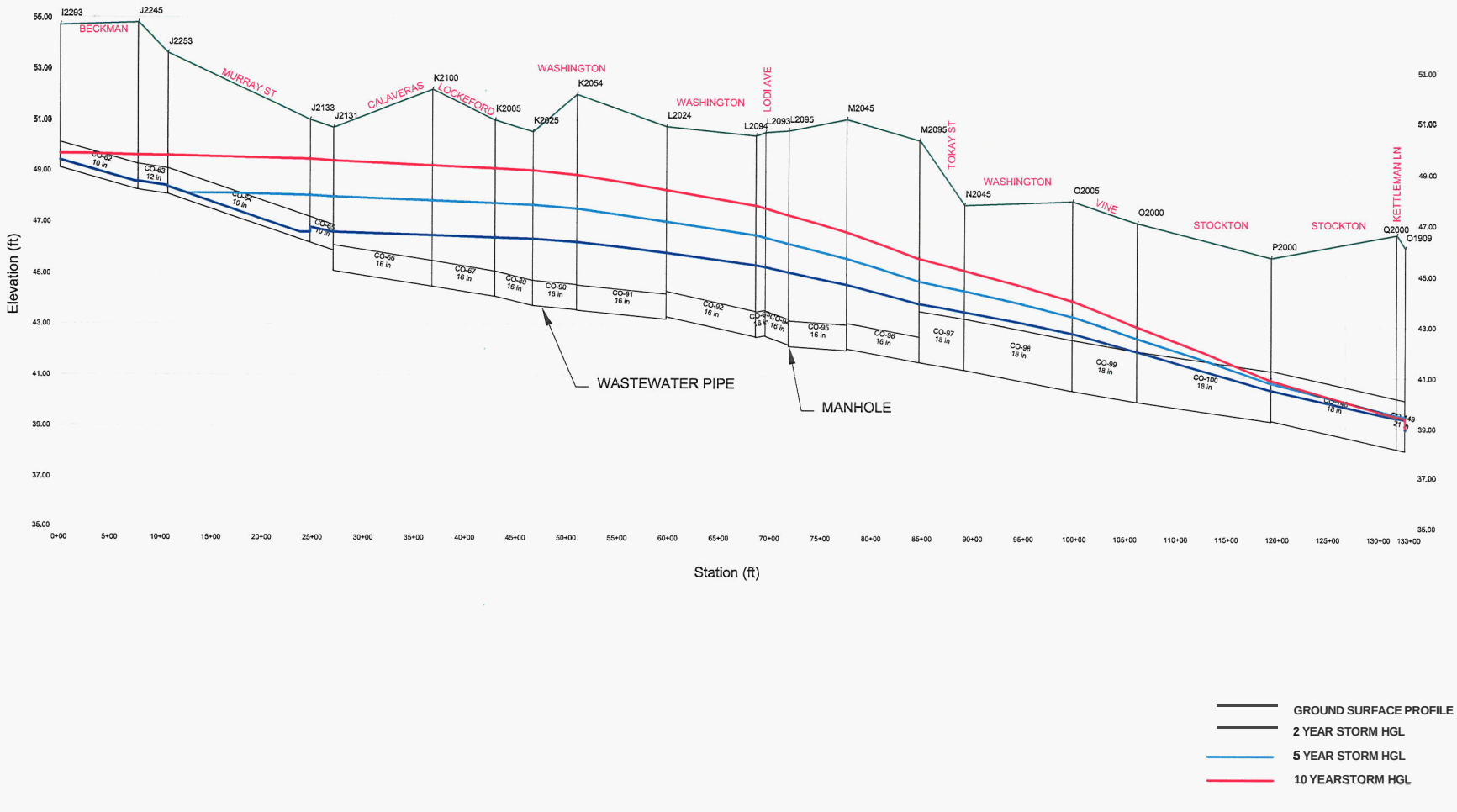

5.7 Recommendations

Based on the flow monitoring studies and modeling results, the following actions are recommended:

1. The V&A flow monitoring study indicated that an unusually high amount of inflow/infiltration (I/I) is occurring in the industrial area (especially the area served by the Cluff Avenue Pump Station). An aggressive inflow monitoring program needs to be implemented in that area to identify and eliminate cross connections and illegal pumping of storm water into the wastewater system. The balance of the City also has some I/I problems and would benefit from a continuous inflow monitoring program to eliminate cross connections.

2. Since the majority of the wastewater mains in the City experience flow velocities of less than 2.0 feet per second during dry weather peak flow conditions **(Figure 5-I),** the mains should be regularly inspected and cleaned to remove debris, especially in preparation for the wet weather season.

   It is recommended that the following wastewater mains be monitored and cleaned regularly:

Table 5-1 Wastewater Pipe Monitoring and Cleaning Location

Wastewater Main Segment	From	To
Washington Street	Lockeford Street	Vine Street
Crescent Avenue	Vine Street	Kettleman Lane
Hutchins Street	Locust Street	Lodi Avenue
Church Street	Alley N/Pine Street	Walnut Street
Stockton Street	Alley N/Locust Street	Alley S/Pine Street
Calaveras Street	Pioneer Drive	Lockeford Street
Sycamore Street	Sacramento Street	Hutchins Street

The following table presents the recommended **capital improvement projects** to accomplish these results:

Table 5-2 Capital Improvement Projects

Wastewater Main	From	To	Description	Footage	cost
Hutchins Street	Sycamore Street	Kettleman Lane	Increase from 18" to 21"	1,292	$250,000
Stockton Street	Vine Street	Kettleman Lane	Increase from 18" to 21"	2,560	$500,000
Lodi Avenue	Sacramento Street	Hutchins Street	Increase from 12" to 15"	1,857	$300,000
				Total Cost	**$1,050,000**

4. Due to the number of diversion nodes in the City's wastewater system, additional flow monitoring should be performed to provide data to increase the accuracy of the wastewater model.

   Additional flow monitoring should be conducted at the following locations:

Table 5-3 Future Flow Monitoring Locations

Monitoring Location	Cross Street	Number of Flow Sensors
Stockton Street	Kettleman Lane	2
Washington Street	Alley N/Walnut Street	2
Washington Street	Alley N/Locust Street	2
Kettleman Lane	Hutchins Street	2
Ham Lane	Tokay Street	2
Cherokee Lane	Kettleman Lane	2
Cherokee Lane	Delores Street	1
Lower Sacramento Road	N/Kettleman Lane	1

5.2 Conclusion

Based on the modeling results, no capital improvement projects are required in the immediate future to accommodate both dry weather and wet weather flows. The surcharge conditions present during wet weather flows could be improved by the recommended capital improvements projects listed in **Table 5-3.**

A design storm (either 5-year or 10-year storm) for wastewater water peak flow design for new developments needs to be adopted and incorporated into the City's Design Standards.

Since the wastewater model was limited to pipes having diameters 8 inches or larger, and since the majority of the City's wastewater pipes are 6-inch pipes, the wastewater model should be expanded to include 6-inch wastewater mains to increase the accuracy and flexibility of the model.

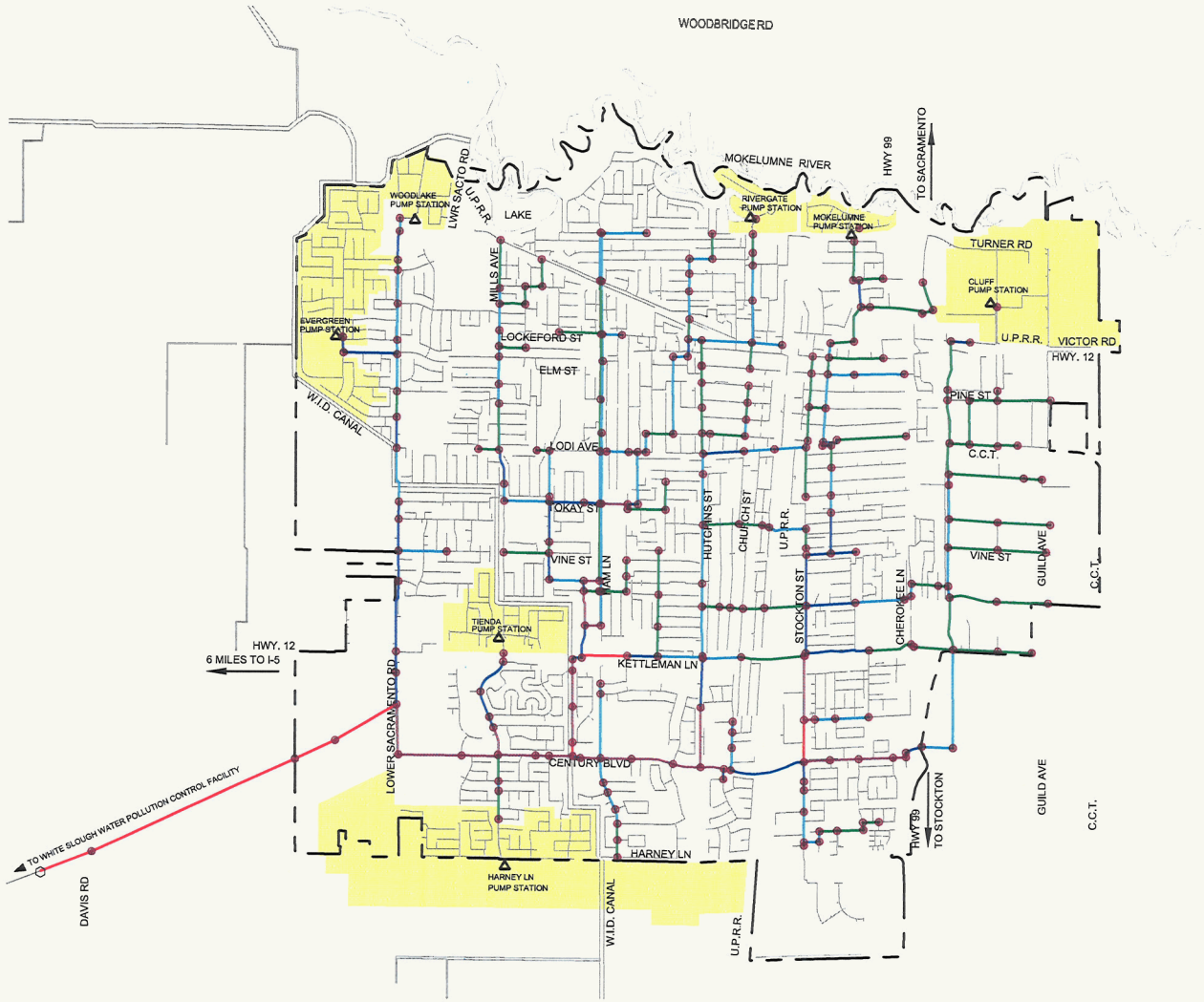

1" = 3000'

FIGURE 5-1

DRY WEATHER **PEAK** VELOCITY

FLOW VELOCITY (ft/s)

- < 1.0
- 1.0-1.5
- 1.5-2.0
- 2.0 - 3.0
- 3.0 - 4.0
- UNMODELED SEWERS
- CITY BOUNDARY
- A PUMP STATION
- PUMP STATION BOUNDARY

K:\DESIGN\Projects\Wastewater Capacity Study\Draft Report\Capacity Exhibits.dwg, DRY_PEAK_VEL, 06/01/2009 10:17:58 AM, lchang

Appendix A Model results vs Measured Values at Flow Monitoring Locations

APPENDIX A
Model Results vs Measured Values at Flow moniroting Locations

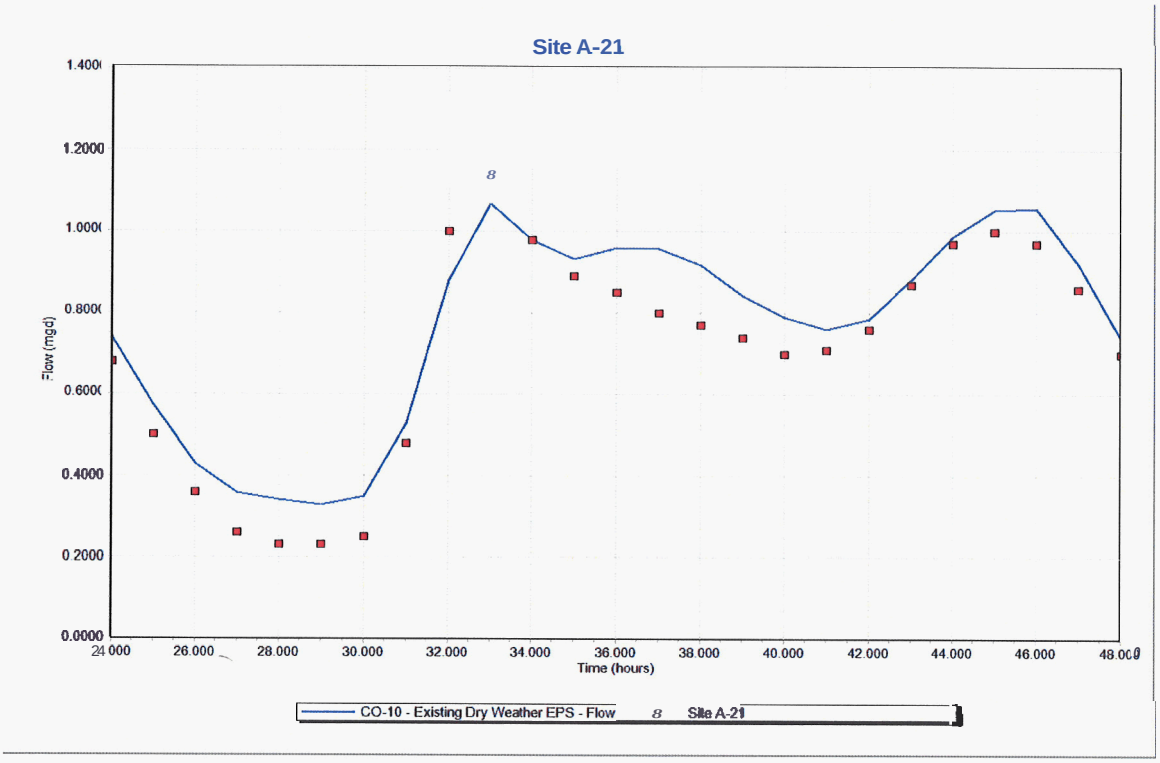

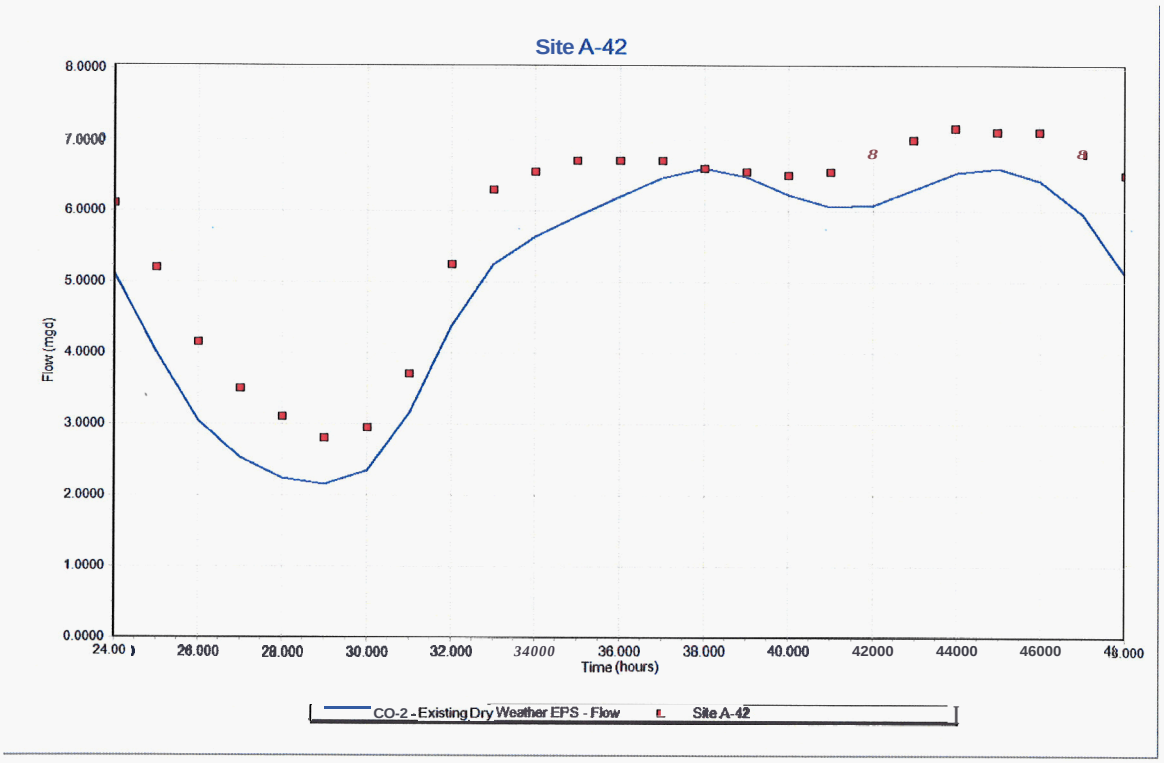

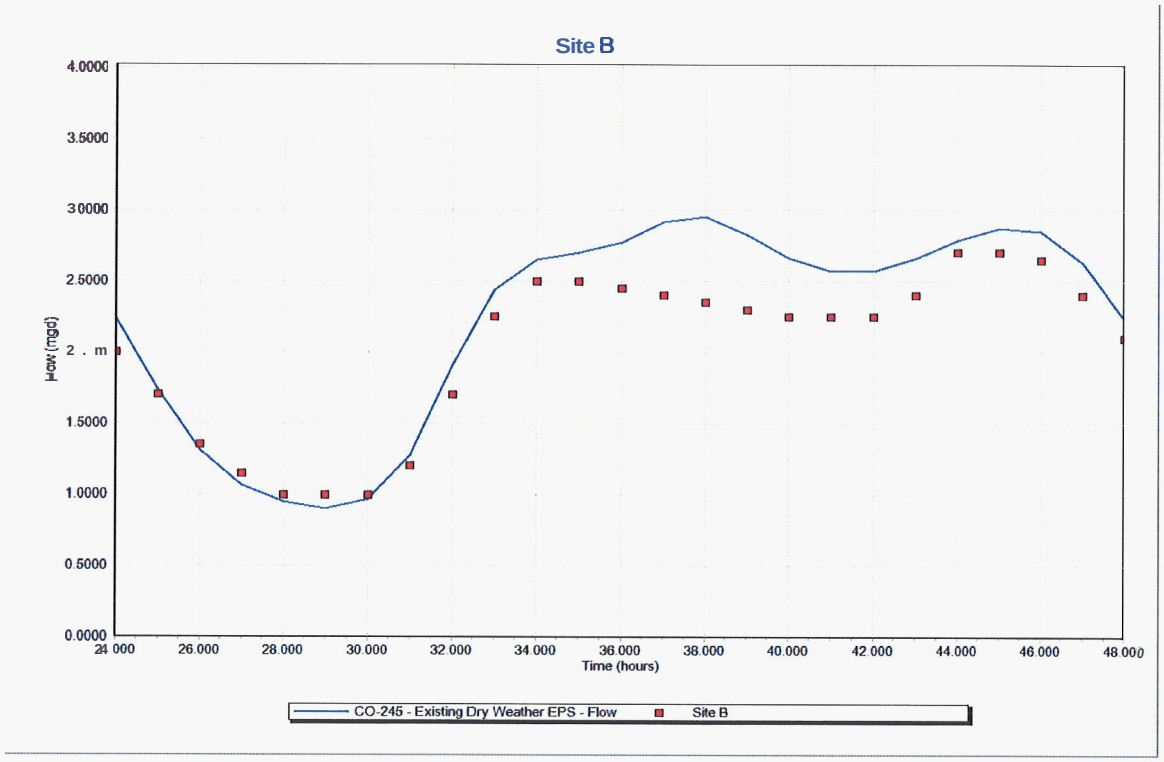
Site B
4.0000
3.5000
3.0000
2.5000
2 . m
1.5000
1.0000
0.5000
0.0000
Flow (mgd)
24.000
26.000
28.000
30.000
32.000
34.000
36.000
38.000
40.000
42.000
44.000
46.000
48.000
Time (hours)
CO-245 - Existing Dry Weather EPS - Flow
Site B

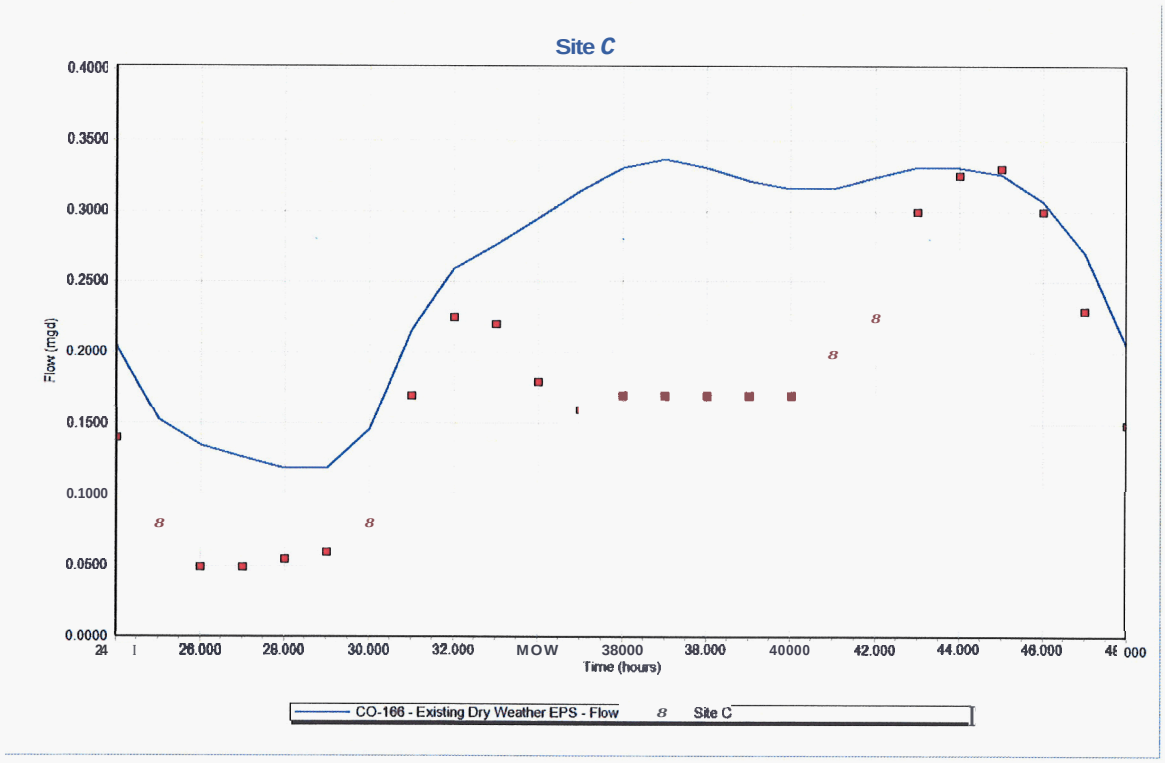
Site C
0.4000
0.3500
0.3000
0.2500
0.2000
0.1500
0.1000
0.0500
0.0000
Flow (mgd)
24
26.000
28.000
30.000
32.000
MOW
38000
38.000
40000
42.000
44.000
46.000
Time (hours)
CO-166 - Existing Dry Weather EPS - Flow
Site C

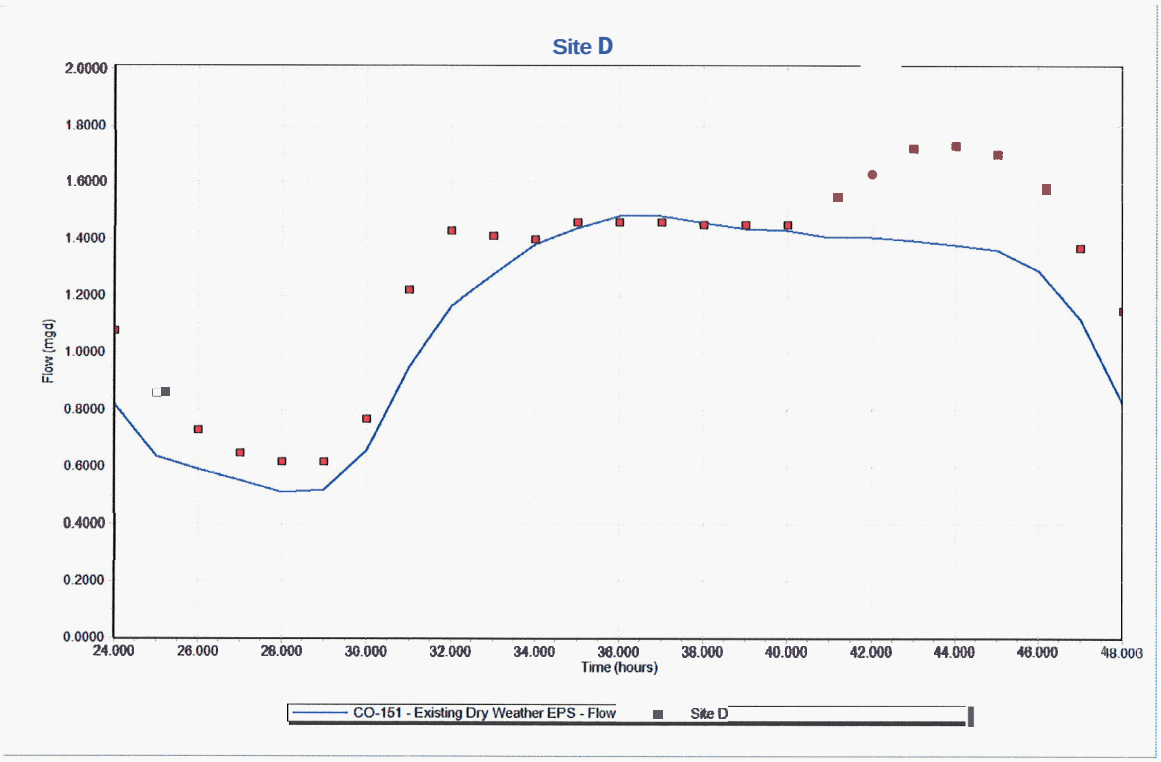
Site D
2.0000
1.8000
1.6000
1.4000
1.2000
1.0000
0.8000
0.6000
0.4000
0.2000
0.0000
Flow (mgd)
24.000
26.000
28.000
30.000
32.000
34.000
36.000
38.000
40.000
42.000
44.000
46.000
48.000
Time (hours)
CO-151 - Existing Dry Weather EPS - Flow
Site D

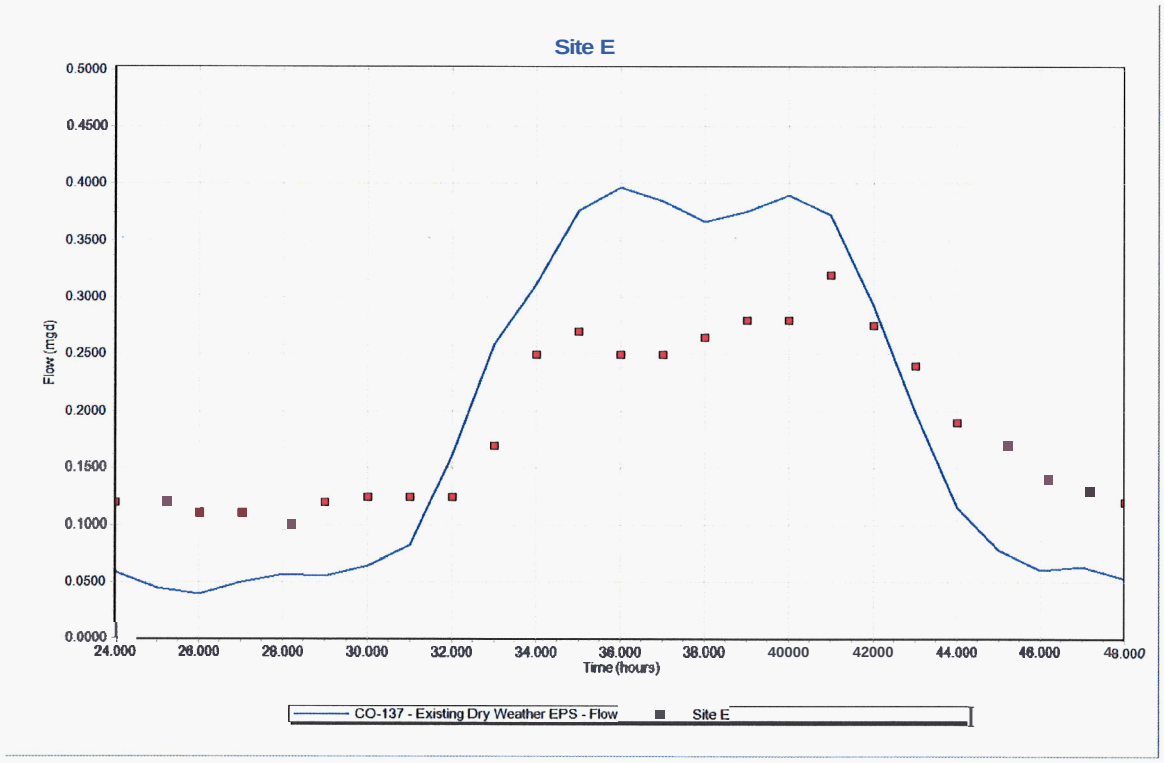
Site E
0.5000
0.4500
0.4000
0.3500
0.3000
0.2500
0.2000
0.1500
0.1000
0.0500
0.0000
Flow (mgd)
24.000
26.000
28.000
30.000
32.000
34.000
36.000
38.000
40000
42000
44.000
46.000
48.000
Time (hours)
CO-137 - Existing Dry Weather EPS - Flow
Site E

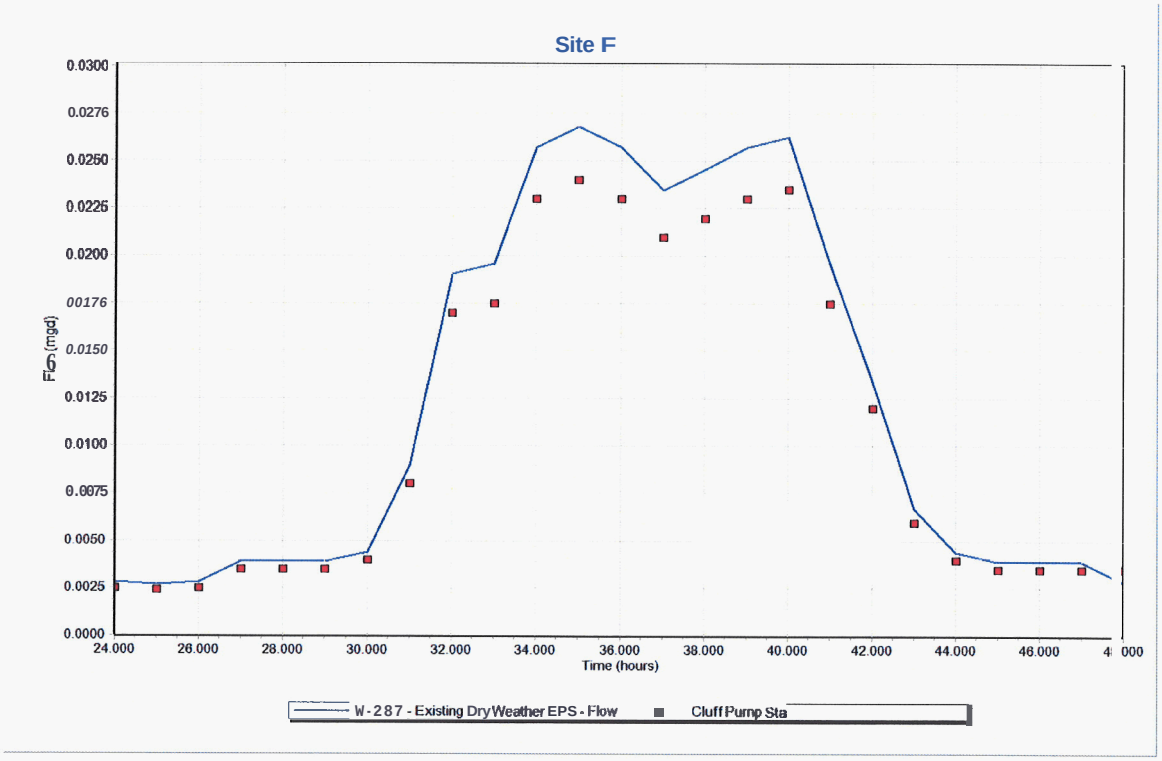
Site F
Flow (mgd)
Time (hours)
W-287 - Existing Dry Weather EPS - Flow
Cluff Pump Sta

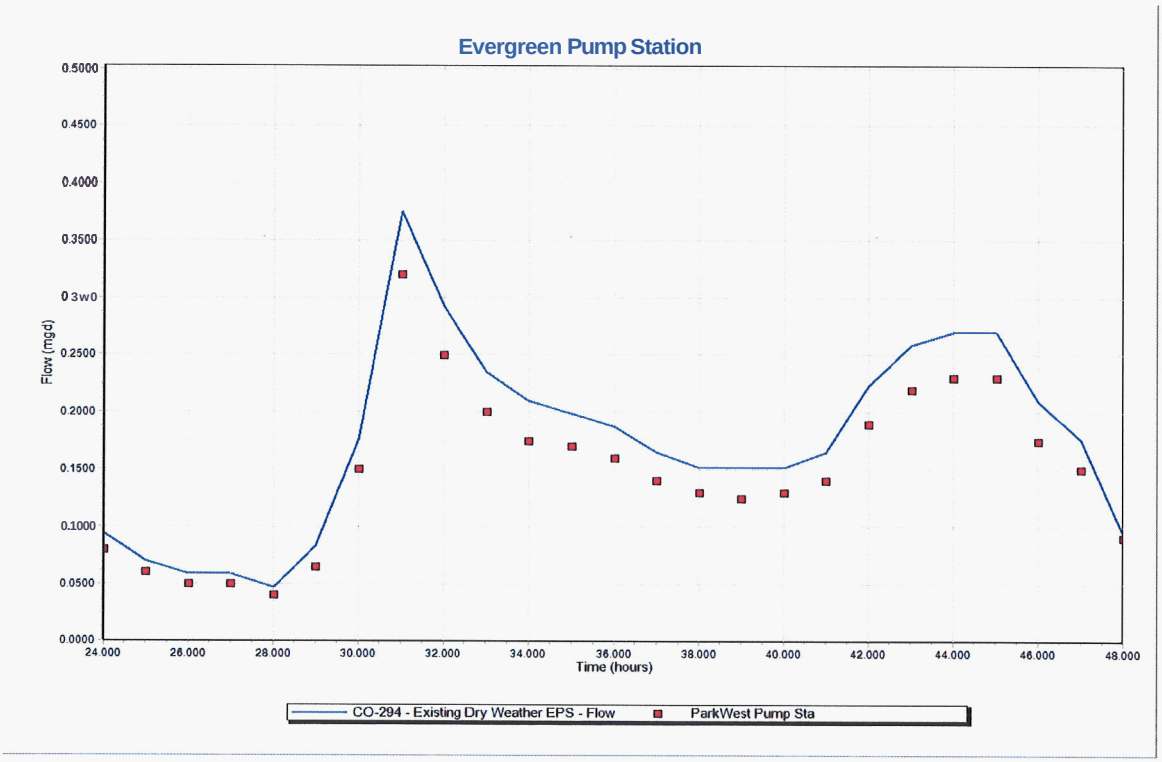
Evergreen Pump Station
Flow (mgd)
Time (hours)
CO-294 - Existing Dry Weather EPS - Flow
ParkWest Pump Sta

APPENDIX I

Monitoring, Measurement, and Program Modifications Documents

Appendix I includes the following:

I-1 Water Service Division SSMP Implementation Schedule

1-2 Water Service Division Fiscal Year System Information, Financial Information, Sewer Maintenance, and Performance Measures

1-3 Historical Summary of Sanitary Sewer System Overflows

City of Lodi SSMP Implementation Schedule

The Sewer System Management Plan, also called an SSMP, implementation schedule is developed to support the City's SSMP goals. The implementation schedule is an action plan with activities, schedules, and resources estimated to implement the SSMP.

Goals

Table 1 presents the plan for meeting the GWDR requirements for the SSMP Goals.

Table 1 - Goals

Activities	Plan Date	Responsible
[illegible] to properly manage, operate, and maintain all parts of the sanitary sewer system to help reduce and prevent SSOs as well as mitigate any SSOs that do occur	11/02/[illegible]	[illegible]

Organization

Table **2** presents the plan for meeting the GWDR requirements for the Organization.

The Public Works Department has the primary responsibility for compliance with the state order. The Public Works Director is Richard Prima; the tasks associated with the compliance are shared between the Water Services Division and the Engineering Division. The manger for the Water Services Division is Charles E Swimley Jr.; the Manager for the Engineering Division is F. Wally Sandelin; the superintendent for the Water Services Division is Vacant. Kevin Gaither is the Water Services Technician and is assigned as the project manager for the development of the Sanitary Sewer Management Plan (SSMP).

Table 2 - Organization

Activities	Plan Date	Responsible
Identify the name of the responsible or authorized representative	11/02/07	K. Gaither
Identify the names and telephone numbers for management, administrative, and maintenance positions responsible for implementing specific measures in the SSMP program	11/02/07	K. Gaither
Identify the chain of communication for reporting SSOs, from receipt of a complaint or other information, including the person responsible for reporting SSOs to the State and Regional Water Board and other agencies	11/02/07	K. Gaither

Legal Authority

Table 3 presents the plan for meeting the GWDR requirements for the Legal Authority.

Table 3 – Legal Authority

Activities	Plan Date	Responsible
Demonstrate through the municipal ordinance that the City possesses the necessary legal authority to prevent illicit discharges into its sanitary sewer system	5/02/09	K. Gaither
Demonstrate through the municipal ordinance that the City possesses the necessary legal authority to require that sewers and connections be properly designed and constructed;	5/02/09	K. Gaither
Demonstrate through the municipal ordinance that the City possesses the necessary legal authority to ensure access for maintenance, inspection, or repairs for portions of the lateral owned or maintained by the Public Agency;	5/02/09	K. Gaither
Demonstrate through the municipal ordinance that the City possesses the necessary legal authority to limit the discharge of fats, oils, and grease and other debris that may cause blockages, and	5/02/09	K. Gaither
Demonstrate through the municipal ordinance that the City possesses the necessary legal authority to enforce any violation of its sewer ordinances	5/02/09	K. Gaither

Operation and Maintenance Program

Table 4 presents the plan for meeting the GWDR requirements for the Operation and Maintenance Program.

Table 4 – Operation and Maintenance Program

Activities	Plan Date	Responsible
Include an up-to-date map of the sanitary sewer system	5/02/09	W. Sandelin
Describe routine preventive operation and maintenance activities by staff and contractors	5/02/09	K. Gaither
Develop a rehabilitation and replacement plan to identify and prioritize system deficiencies and implement short-term and long-term rehabilitation actions to address each deficiency including regular visual and TV inspections of manholes and sewer pipes	5/02/09	K. Gaither
Provide training on a regular basis for staff in sanitary sewer system operations and maintenance	5/02/09	K. Gaither
Provide equipment and replacement part inventories	5/02/09	K. Gaither

Design and Performance Provisions

Table 5 presents the plan for meeting the GWDR requirements for the Design and Performance Provisions.

Table 5 – Design and Performance Provisions

Activities	Plan Date	Responsible
Document design and construction standards and specifications for the installation of new sanitary sewer systems	8/02/09	W. Sandelin
Document procedures and standards for inspecting and testing the installation of new sewers	8/02/09	W. Sandelin

Overflow Emergency Response Plan (OERP)

Table 6 presents the plan for meeting the GWDR requirements for the Overflow Emergency Response Plan.

Table 6 – Overflow Emergency Response Plan

Activities	Plan Date	Responsible
Document that the Overflow Emergency Response Plan (OERP) contains proper notification procedures so that the primary responders and regulatory agencies are informed of all SSOs in a timely manner	5/02/09	K. Gaither
Document that the OERP contains a program to ensure an appropriate response to all overflows;	5/02/09	K. Gaither
Document that the OERP contains procedures to ensure prompt notification to appropriate regulatory agencies and other potentially affected entities of all SSOs that potentially affect public health or reach the waters of the State in accordance with the GWDR Monitoring and Reporting Program (MRP). Document that the OERP identifies the officials who will receive immediate notification	5/02/09	K. Gaither
Document that the OERP contains procedures to ensure that appropriate staff and contractor personnel are aware of and follow the OERP and are appropriately trained	5/02/09	K. Gaither
Document that the OERP contains procedures to address emergency operations such as traffic and crowd control	5/02/09	K. Gaither
Document that the OERP contains a program to ensure that all reasonable steps are taken to contain and prevent the discharge of untreated and partially treated wastewater to waters of the United States and to minimize or correct any adverse impact on the environment resulting from the SSOs, including such accelerated or additional monitoring as may be necessary to determine the nature and impact of the discharge	5/02/09	K. Gaither

Fats, Oils, and Grease (FOG) Control Program

Table 7 presents the plan for meeting the GWDR requirements for the FOG Control Program.

Table 7 – FOG Control Program

Activities	Plan Date	Responsible
Eivaluate the City's service area to determine whether a FOG control program is needed. If FOG is found to be a problem, prepare and implement a FOG source control program to reduce the amount of these substances discharged to the sanitary sewer system. This plan shall include the following as appropriate	6/1/10	K. Gaither
• An implementation plan and schedule for a public education outreach program that promotes proper disposal of FOG	6/1/10	K. Gaither
• A plan and schedule for the disposal of FOG generated within the sanitary sewer system service area	6/1/10	K. Gaither
• The legal authority to prohibit discharges to the system and identify measures to prevent SSOs and blockages caused by FOG	6/1/10	K. Gaither
• Requirements to install grease removal devices, design standards for the removal devices, maintenance requirements, BMP requirements, record keeping and reporting requirements	6/1/10	K. Gaither
• Authority to inspect grease producing facilities, enforcement authorities and sufficient staff to inspect and enforce the FOG ordinance	6/1/10	K. Gaither
• Identification of sanitary sewer system sections subject to FOG blockages and establishment of a cleaning maintenance schedule for each section	6/1/10	K. Gaither
• Development and implementation of source control measures for all sources of FOG discharged to the sanitary sewer system	6/1/10	K. Gaither

System Evaluation and Capacity Assurance Plan

Table **8** presents the plan for meeting the GWDR requirements for the System Evaluation and Capacity Assurance Plan.

Table 8 – System Evaluation and Capacity Assurance Plan

Activities	Plan Date	Responsible
Prepare and implement a capital improvement plan (CIP) that will provide hydraulic capacity of key sanitary sewer system elements for dry weather peak flow conditions, as well as the appropriate design storm or wet weather event. At a minimum, the plan must include:	8/02/09	W. Sandelin
• **Evaluation:** Actions needed to evaluate those portions of the sanitary sewer system that are experiencing or contributing to an SSO discharge caused by hydraulic deficiency	8/02/09	W. Sandelin
• **Design Criteria:** Where design criteria do not exist or are deficient, undertake the evaluation identified above to establish appropriate design criteria	1/1/10	W. Sandelin
• **Capacity Enhancement Measures:** Establish a short- and long-term CIP to address identified hydraulic deficiencies, including prioritization, alternatives analysis, and schedules. The CIP shall include an implementation schedule and shall identify sources of funding.	3/1/10	W. Sandelin
• **Schedule:** Develop a schedule of completion dates for all portions of the capital improvement program.	3/1/10	W. Sandelin

Monitoring, Measurement, and Program Modifications

Table 9 presents the plan for meeting the GWDR requirements for the Monitoring, Measurement, and Program Modifications.

Table 9 – Monitoring, Measurement, and Program Modifications

Activities	Plan Date	Responsible
Develop and maintain relevant information that can be used to establish and prioritize appropriate SSMP activities	31/1/10	K. Gaither
Develop and monitor the implementation and, where appropriate, measure the effectiveness of each element of the SSMP	3/1/10	K. Gaither
Assess the success of the preventative maintenance program	3/1/10	K. Gaither
Update program elements, as appropriate, based on monitoring or performance evaluations	3/1/10	K. Gaither
Identify and illustrate SSO trends, including: frequency, location, and volume	3/1/10	K. Gaither

Program Audits

Table 10 presents the plan for meeting the GWDR requirements for the SSMP Program Audits.

Table 10 - Program Audits

Activities	Plan Date	Responsible
Conduct periodic internal audits, appropriate to the size of the system and the number of SSOs. At a minimum, these audits must occur every *two* years and a report must be prepared and kept on file.	6/1/10	K. Gaither

Communication Program

Table 11 presents the plan for meeting the GWDR requirements for the Communication Program.

Table 11 - Communication Program

Activities	Plan Date	Responsible
Communicate on a regular basis with the public on the development, implementation, and performance of its SSMP. The communication system shall provide the public the opportunity to provide input as the program is developed and implemented. Also create a plan of communication with systems that are tributary and/or satellite to the City's sanitary sewer system	1/1/10	K. Gaither

City . ..di
Sanitary Sewer Overflow
Data Sheet

194	Spill Date	Location/MH Number	Category	Report time	Arrival	Depart Time	Response Time	Stop Time	Spill Duration	Volume of Spill	Volume of Rewvery	State Report#	#SSO's/10 Miles
2009													
	01/05/2009	6 Oak St / #L1933	2	18:29	18:50	20:10	0:21	18:50	0:21	10	10	731475	
	01/21/2009	704 Windsor Dr / #O1734	2	9:34	9:40	10:08	0:06	9:48	0:14	4	4	732262	
	01/18/2009	419 Forrest Av / #I1769	2	9:49	10:30	11:30	0:41	11:15	1:26	15	15	732502	
	02/01/2009	735 S Washington / #N2045	2	10:06	10:40	11:44	0:34	11:14	1:08	60	60	733218	
	03/29/2009	420 N Church	Private	19:02	19:20	19:40	0:18	19:15	0:13	0	0	n/a	
	04/03/2009	No Spill Certification (MAR)	NSC									n/a	
	04/26/2009	2100 Tienda Dr / #P1367	2	14:10	14:25	14:45	0:15	14:40	0:30	2	2	736905	
	05/10/2009	233 S Pleasant Av / CO	Private	9:55	10:15		0 20			71	71	n/a	
	06/12/2009	No Spill Certification (MAY)	NSC									n/a	
	06/12/2009	433 Mission St / #O2144	2	17:30	18:00	18:50	0:30	17:45	0:15	10	0	739167	
6		**Yearly Totals (average)**					**0** 23		0 3 5	22	162		**3.09**

194	Spill Date	Location/MH Number	Category	Report time	Arrival	Depart Time	Response Time	Stop Time	Spill Duration	Volume of Spill	Volume of Recovery	State Report #	#SSO's/10 Miles
2008													
	01/04/2008	600 Block E Lockeford / Multiple	1	14:06	1420	1930	0:14	14:48	0 42	967	0	715937-	
	01/28/2008	546 Tokay St / #N1706	2	13:47	1347	14:30	0:00	14:05	0 18	858	2200	712021	
	03/05/2008	No Spill Certification (FEB)	NSC										
	04/03/2008	No Spill Certification (MAR)	NSC										
	04/03/2008	120 Chesnut St / #M1829	2	10 18	10:30	10:35	0:12	10:25	0:07	10	10	715769	
	04/07/2008	1665 W Lockeford St / #J1476	2	14 40	15:05	15:25	0:25	15:25	0:45	20	20	716112	
	06/02/2008	No Spill Certification (MAY)	NSC										
	06/02/2008	Village St / #Q1879	2	15:42	16:20	17:20	0:38	16:50	1:08	36	36	719066	
	08/01/2008	No Spill Certification (JULY)	NSC										
	08/10/2008	1350 W Walnut / #L1566	2	9 45	10:20	11:45	0:35	11:45	2:00	40	40	724823	
	08/18/2008	Pinewood Ct / #K1493	2	19:02	19:20	20:06	0:18	19:35	0:33	25	25	724905	
	09/08/2008	1730 Capeli / #L1435	2	15 06	15:11	15:30	0:05	15:11	0:05	15	15	726161	
	11/07/2008	No Spill Certification (OCT)	NSC										
	11/08/2008	115 Tamarack Dr / #P1857	2	10:12	11:02	13:30	0:50	12:20	2:08	90	90	729604	
	01/06/2009	No Spill Certification (DEC)	NSC										
9		**Yearly Totals (average)**					**0:21**		**0:51**	**229**	**2436**		**4.64**

188 mi	Spill Date	Location/MH Number	Category	Report time	Arrival	Depart Time	Response Time	Stop Time	Spill Duration	Volume of Spill	Volume of Recovery	State Report #	#SSO's/10 Miles
2007													
	01/13/2007	Grenoble Ct. / #O1231	2	9:35	10:15	11:15	0:40	10:30	0:55	10	0		
	03/10/2007	112 S Church St / lateral	Private	17:44	18:00	18:15	0:16	18:15	0:31	20	0		
	07/31/2007	900 Block Grant / #I1703	2	14:48	15:00	15:30	0:12	15:20	0:32	100	0		
	08/06/2007	1549 S Sacramento St / #Q1879	2	16:15	16:35	17:35	0:20	17:15	1:00	300	0		
	08/08/2007	900 Block Grant / #I1703	2	12:28	13:15	13:20	0:47	13:00	0:32	50	0		
	08/09/2007	425 Eden St / Lateral	Private	16:05	17:00	18:10	0:55	17:05	1:00	200	0		
	09/05/2007	400 Block Harold St / #N2124	2	9:00	9:15	9:40	0:15	9:25	0:25	30	0	657421	
	09/26/2007	631 E Oak St / Lateral	Private	13:01						15	0		
	10/11/2007	230 N Central Av	Private	10:40	11:00	11:45	0:20	11:25	0:45	50	0		
	10/24/2007	800 Block Garfield / #N2195	2	6:46	7:00	8:45	0:14	8:30	1:44	500	441	706602	
	11/20/2007	1354 W Walnut St / #L1566	2	8:14	8:45	9:45	0:31	9:30	1:16	40	40	708438	
	11/23/2007	Aladdin Wy / #K1268	2	13:26	13:48	14:33	0:22	14:00	0:34	20	20	708599	
	11/26/2007	200 Block Turner Rd / #I1808	2	15:19	15:30	15:46	0:11	15:35	0:16	25	25	708671	
	12/04/2007	Hutchins Street Square	Private	15:00	15:15	16:00	0:15	16:00	1:00	15	0		
	12/07/2007	600 Block Lockeford / Multiple	1	10:30	11:00	13:00	0:30	11:30	1:00	4734	71800	708900	
	12/18/2007	200 Block N Pleasant/ #K1806	2	14:15	14:30	14:55	0:15	14:35	0:20	10	100	709928	
	12/31/2007	346 E Elm / #K2180	2	10:43	10:55	11:35	0:12	11:35	0:52	282	500	710736	
17		**Yearly Totals (average)**					**0:23**		**0:47**	**377**	**72926**		**6.38**

182 mi	Spill Date	Location/MH Number	Category	Report time	Arrival	Depart Time	Response Time	Stop Time	Spill Duration	Volume of Spill	Volume of Recovery	State Report #	#SSO's/10 Miles
2006													
	02/11/2006	524 Yokuts / #H2167	2	11:12	11:45	12:15	0:33	11:45	0:33	5	0		
	03/08/2006	220 W Turner / #I1808	2	14:30	14:45	15:05	0:15	14:50	0:20	2	0		
	03/13/2006	Fairmont & Lockeford / #J1674	2	9:45	9:50	9:58	0:05	9:53	0:08	25	0		
	05/08/2006	207 W Oak / Lateral	Private	10:00	10:20	10:45	0:20	10:25	0:25	15	0		
	11/06/2006	712 Lincoln St / Lateral	2	14:30	14:45	14:15	0:15	14:50	0:20	5	0		
	11/16/2006	412 N Church St / Lateral	Private	11:55	0:00	0:00		12:10	0:15	50	0		
	12/11/2006	Pinewood Ct / #K1493	2	10:42	10:42	10:57	0:00	10:57	0:15	5	0		
	12/20/2006	217 Redwood St / #N2025	2	8:00	8:10		0:10	8:15	0:15	100	0		
8		**Yearly Totals (average)**					**0:14**		**0:18**	**26**	**0**		**3.29**

176 mi	Spill Date	Location/MH Number	Category	Report time	Arrival	Depart Time	Response Time	Stop Time	Spill Duration	Volume of Spill	Volume of Recovery	State Report #	#SSO's/10 Miles
2005													
	02/04/2005	Central & Elm / #K2180	2	18:31	19:10	20:40	0:39	20:00	1:29	75	0		
	02/09/2005	Central & Elm / #K2180	2	19:31	20:30	22:20	0:59	21:20	1:49	30	0		
	02/09/2005	2345 Arvilla Ct / #I1233	2	16:55	17:15	17:35	0:20	17:15	0:20	5	0		
	04/25/2005	808 S Stockton	Private	13:30						25	0		
	06/23/2005	620 S Cherokee Ln / GT	Private	11:45	8:30					150	0		
	09/30/2005	2216 Aladdin Wy / #K1268	2	14:46	14:55	1735	009	1510	0:24	5	0		
	11/27/2005	812 Daisey Av / #I1685	2	14:50	15:00	15:30	0:10	15:30	0:40	25	0		
	12/03/2005	619 S Central Av / #M2098	2	9:28	10:00	10:30	0:32	10:00	0:32	20	0		
	12111/2005	1801 W Pine St / #K1483	2	1002	11:55	14 55	153	12:00	1:58	100	0		
	12/11/2005	Turner Rd & Church St / #?	2	10:10	10:45	12 45	0:35	11:00	0:50	100	0		
10		**Yearly Totals (average)**					**0** 39		**1:00**	**54**	**0**		***454***

APPENDIX J

SSMP Program Audit Documents

Appendix J includes the following:

J-1 **Procedure for Audit Form**

J-2 Audit Form

Communication Program Documents

Appendix K includes the following:

K-1 Water Service Division WDR Awareness Program PowerPoint Presentation

K-2 Sanitary Sewer Systems Regulations/Waste Discharge Requirement PowerPoint Presentation (Governing Board/PUC/City Council)

K-3 Two Newsletters Preventing FOG in the Pipes and Not Flushing Medications Down the Sewer

K-4 FOG Outreach Program - Marketing Objective and Strategy

City of Lodi

Sanitary Sewer System Regulations

State Water Resource Control Board
Waste Discharge Requirement (WDR)

What Is A WDR ?

WDR was issued in May 2006 by the SWRCB To:

- Provide enhanced protection for public health and recreational waters.
- Require more rigorous sanitary sewer overflow (SSO) reporting.
- Require development of a Sewer System Management Plan (SSMP).
- Set compliance schedules.
- Inform, Educate, Communicate and Keep Public Apprised of SSMP Status.

Sanitary Sewer Overflows (SSOs

- Old reporting requirements:
  - Greater than 1000 gallons or
  - Impacts Waters of the State and
  - Occurred from the public sewer
  - Written report to RWQCB and call in to OES

Sanitary Sewer Overflows (SSOs)

- New reporting requirements:
  - All SSOs regardless of quantity or if impacts Waters of the State
  - Occurs from a public sewer
  - Voluntary reporting of private sewer spills
  - Electronic Web-based reporting

Example SSOs

Sewer System Management Plan (SSMP) Objectives

- Reduce number and quantity of SSOs
- Comply with notification and reporting requirements
- Ensure proper funding and management of sewer systems
- Available to the public
- Approved by Governing Board at a public meeting

Key Components of SSMP

- Organizational Structure
- Legal Authority
- O&M Program
- Design and Construction standards
- Emergency Response
- Fat, Oils and Grease (FOG) control
- Capacity Assurance
- Performance Measures
- Self Audit Program
- Communication Program

SSO Response Plan

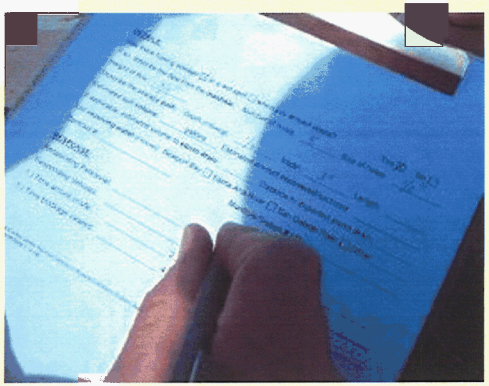

SSMP
Implementation Schedule

Task	Population > 100,000	Population 10,000 to 100,000	Population 2,500 to 10,000	Population < 2,500
Plan and Schedule	8/02/07	11/02/07	2/02/08	5/02/08
Goals Organization	11/02/07	11/02/07	5/02/08	5/02/08
Emer. Resp. Plan Legal Authority O&M Plan FOG Plan	11/02/08	5/02/09	11/02/09	2/02/10
Design and Perfor. Standards System Capacity Plan Final SSMP and Certification	5/02/09	8/02/09	5/02/10	8/02/10

Phased Reporting77

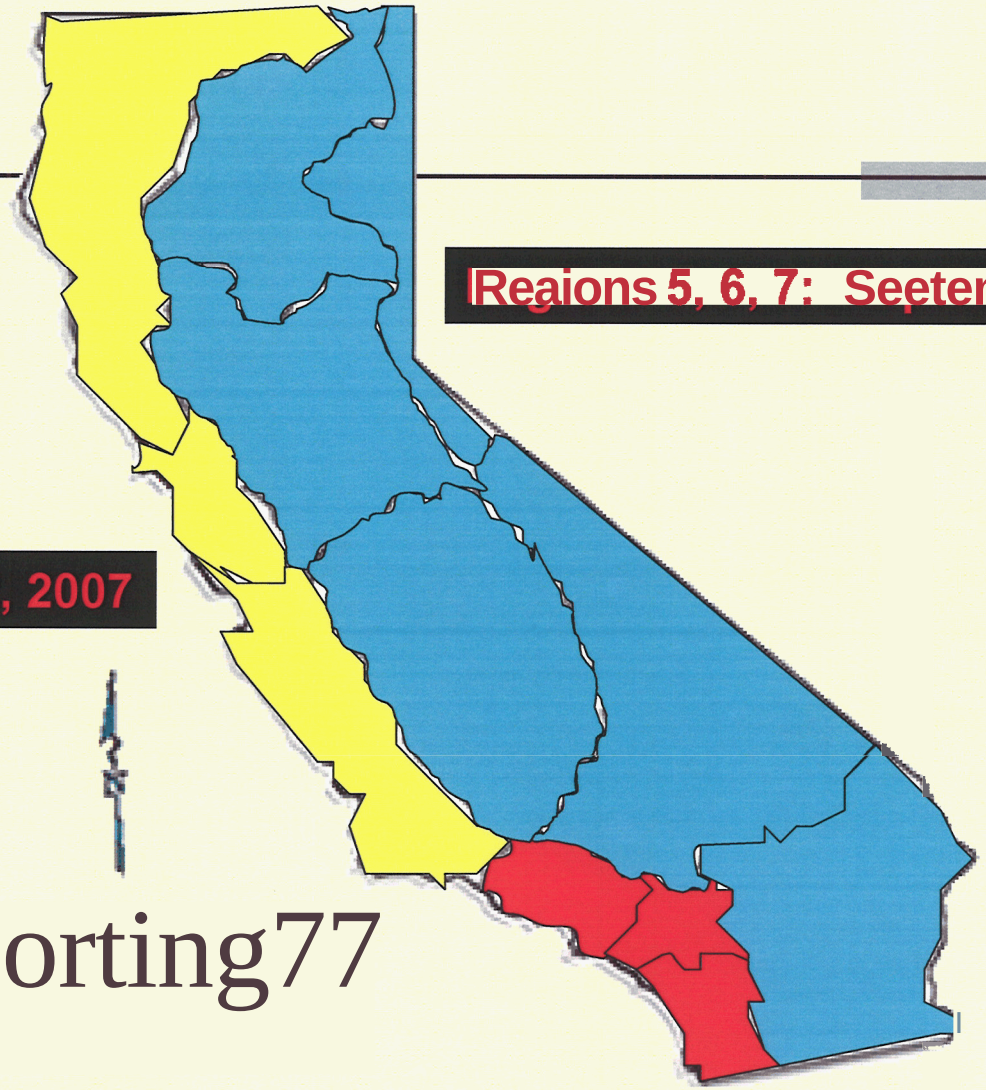

Regions 5, 6, 7: September 2,2007

Regions 1, 2, 3: May 2, 2007

Regions 4, 8, 9: January 2, 2007

Statewide General Waste Discharge Requirements for Sanitary Sewer Systems

California Water Environment Association
Protecting our water environment through education and training.

June 17, 2005

CASA SCAP CVCWA BACWA

Presentation Outline

1. Purpose of the WDR
2. The Basic Requirements of the WDR
   - Application
   - On-line reporting of Sewer System Overflows
   - Development of a Sewer System Management Plan

Purpose of WDR

- Adopted by the SWRCB May 2, 2006
- Proactive approach to ensure system wide operation, maintenance and management plans to reduce SSOs
  - Concept is that many SSOs are preventable
- Allows SWRCB to gather consistent data on causes and sources of SSOs
  - Intents is to provide SWRCB with better understanding of the issue

Basic Definition

- Sanitary Sewer Overflow (SSO)
  - Releases of untreated or partially treated wastewater to waters of the United States
  - Releases of untreated or partially treated wastewater that do not reach waters of the United States
  - Wastewater backups into buildings and on private property that are caused by blockages in the publicly owned portion of the sanitary sewer system

Application Requirements

- All "known" collection systems in the State database will receive an instruction letter from the SWRCB by July 2006.
- All "other" collection systems must also apply.
  - Their responsibility to go online and get information
- Application must be submitted by November 2, 2006.

On-Line Reporting Requirements

1. Reporting deadlines by Region
2. Timeframes for reporting actual SSOs

Phased Reporting

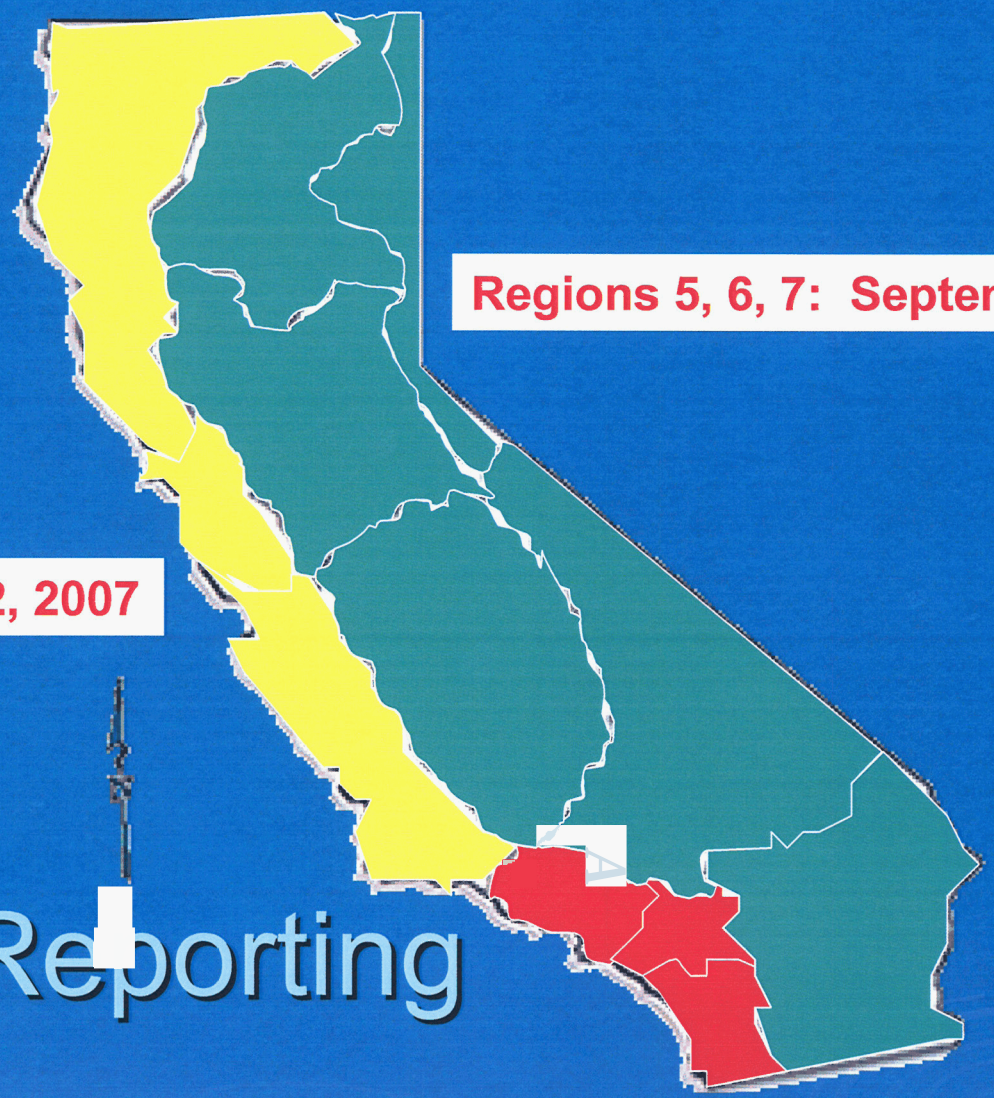

Regions 5, 6, 7: September 2, 2007

Regions 1, 2, 3: May 2, 2007

Regions 4, 8, 9: January 2, 2007

SSO Reporting Timeframes

Category 1 SSOs

- Initial Report ASAP but no more than 3 business days
- Final Certified Report within 15 days of conclusion of response and remediation

Category 2 SSOs

- Report within 30 days of the end of the month

Reporting, Timeframes (continued)

Private Lateral SSOs

- May be reported at Enrollee's discretion

No SSOs During Month

- Report no SSOs within 30 days of end of the month

Caution!

- These requirements do not supercede required timeframes for reporting to the **Office of Emergency Services, County Health Departments and Regional Water Boards!!!!**

Sewer System Management Plan

1. Sewer System Management Plan (SSMP) components
2. Phased implementation timeframes by size of community served

SSMP Components

- Plan and Schedule
- Goals
- Organization
- Legal Authority
- Overflow Emergency Response Plan
- Operation and Maintenance Plan
- FOG Control Program

SSMP Components
(continued)

- Design and Performance Standards
- System Capacity Assurance Plan
- Monitoring, Measurement, and Program Modifications
- SSMP Program Audits
- Communication Program
- Final Certification

SSMP

Final Certification

- SSMP and program to implement SSMP must be certified in compliance with GWDR by Enrollee's governing body at a public meeting
  - Authorized representative follows up with submittal to SWRCB of signed and completed form regarding certification
- Program must be internally audited every two years
- Program must be updated at least every five years

SSMP
Implementation Schedule

Task	Population > 100,000	Population 10,000 to 100,000	Population 2,500 to 10,000	Population < 2,500
Plan and Schedule	8/02/07	11/02/07	2/02/08	5/02/08
Goals Organization	11/02/07	11/02/07	5/02/08	5/02/08
Emer. Resp. Plan Legal Authority O&M Plan FOG Plan	11/02/08	5/02/09	11/02/09	2/02/10
Design and Perfor. Standards System Capacity Plan Final SSMP and Certification	5/02/09	8/02/09	5/02/10	8/02/10

Summary

All public owned sewer collection systems in the State greater than one-mile in length must:

- Apply for the State General Waste Discharge Requirements for Sanitary Sewer Systems
- Report SSOs using SWRCB on-line reporting system
- Develop a comprehensive Sewer System Management Plan

Summary
(continued)

- Compliance with the GWDR, particularly the SSMP, will involve investment of resources
- Since each SSMP is unique to each facility, Enrollees should carefully review their resource needs and include it in budget planning
  - There is a need for raising rates to cover these new costs

CWEA Training Plans

- CWEA has entered into an MOA with the SWRCB to conduct training on the components of the GWDR
  - In return, the SWRCB extended the original compliance deadline to those presented today.
- CWEA will conduct training for:
  - On-line reporting
  - Monitoring and Reporting Requirements
  - SSMP development and implementation
- Training will be offered throughout the State to maximize the number of agencies that can participate and to meet compliance schedule

Training Goals from MOA

- General understanding of GWDR requirements
- Skills to report data using the State Water Board electronic reporting system, including understanding database fields and what constitutes valid values, definitions of terms, and overview of methods of gathering the data that must be reported
- Knowledge of Monitoring & Reporting Program
- Knowledge of components and timeframes for SSMP development and implementation

Training Elements from MOA

- Overview presentation of key GWDR requirements
- Hands-on exercises, examples, and demonstrations of the data base functionality
- Training manual for each attendee
- Evaluation tool to gauge training program effectiveness (continuous improvement)
- Database simulation (web-hosted)
- Feedback mechanism to State Water Board

CWEA Deliverables from MOA

- Develop & execute a work plan to meet training objectives & compliance schedule. Offer periodic training at conferences.
- Develop presentations to meet training goals
- Develop training manual
- Develop evaluation tool, update training
- Work with summit partners
- Provide feedback to State
- Develop dBase simulation

State Deliverables from MOA

- Modify database (resource dependent)
- Provide access to produce dBase simulation
- Review training materials & provide timely feedback
- Provide regional water board training venues & staff contacts as possible
- Develop Q&A guidance doc on GWDR
- Provide functional and responsive help desk
- Provide feedback on quality of inputs to dBase
- Post CWEA 4 training announcements
- Provide agency contact information to CWEA

CWEA SSO WDR Training Task Force

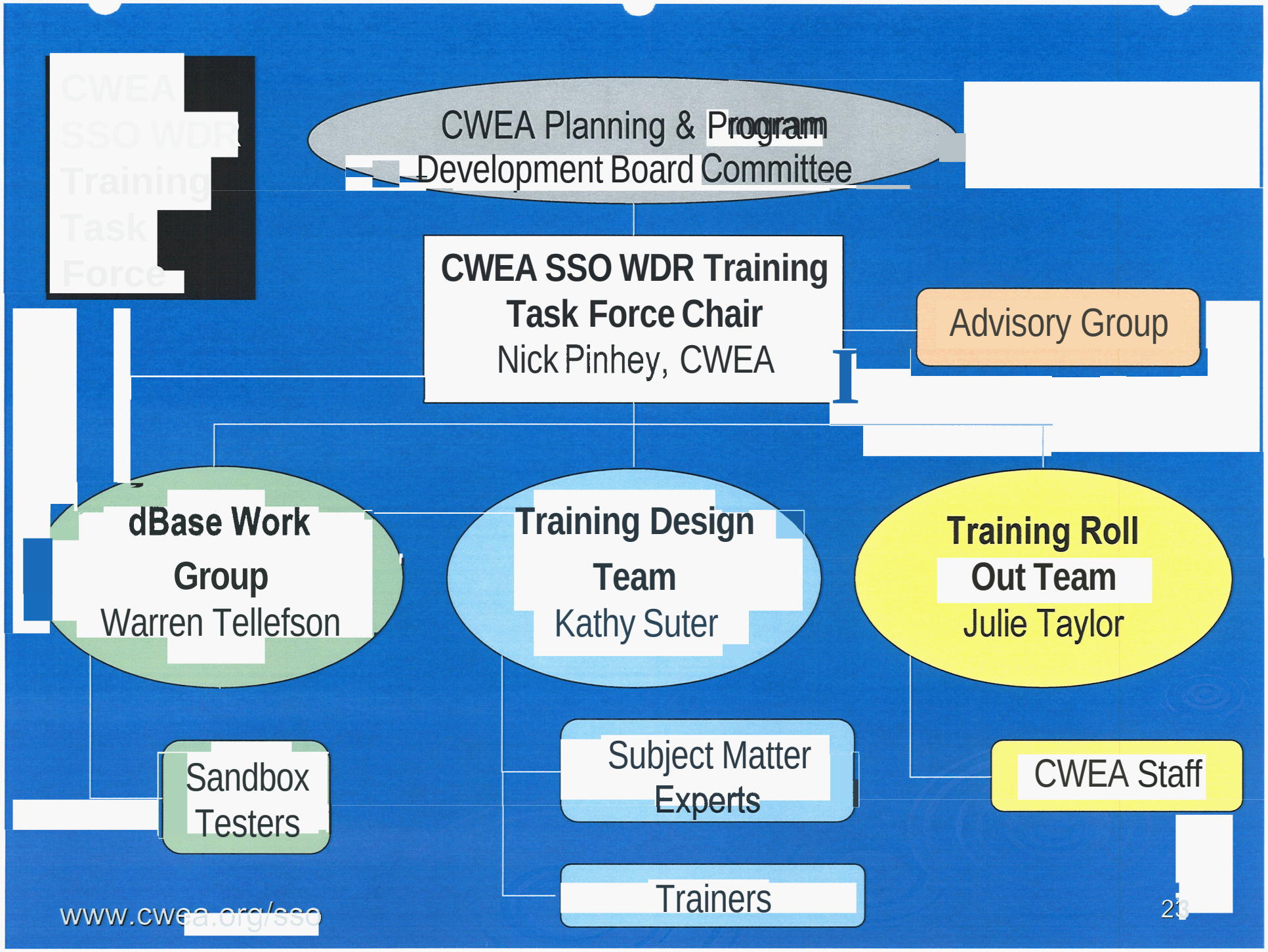

Training model highlights

- Instructional designer
  - Develop course curriculum
  - Develop training manual
  - Lead train-the-trainer
- Screen qualified volunteer speakers
- Web-hosted dBase simulation for training experience
- Train-the-trainer sessions for qualified volunteer speakers led by instructional designer
- Offer information in several "modes"
- SSMP 101, 201?, 301?

Stay Tuned!

- Training is in development & will roll out in Fall
  - Beta Tests at NRTC 9/17 and Tri-State Seminar 9/30
  - Regions 4, 8, 9 Targeted roll out late October– December 2006
  - Regions 1, 2, 3 Targeted roll out February– April 2007
  - Regions 5, 6, 7 Targeted roll out May – August 2007
  - Focus first on Monitoring and Reporting and On-line reporting
- Check www.cwea.org/sso often for updates on training, resources, presentations you can use

How you can help

Trainers

- 50 students in each 4 hour session. Two sessions per each training day (8 hours of facilitation for trainers per day)
- Experiential training using real-world case studies
- Facilitation role for the qualified volunteer trainers selected
- Trainers selected to deliver the training will participate in a Train-the-Trainer session (1 day) and will be asked to commit to facilitate at least 2 days of training. Estimated volunteer hours = 3-6 days per trainer.
- **Submit trainer interest form: www.cwea.org/sso**

- **Venues**
- sso@cwea.org

Thank you!

- Nick Pinhey, Public Works Director, City of Modesto
  - WDR Training Task Force Chair
  - @cwea

CWEA SSO
sso@cwea.org